July 1999 • NREL/TP-580-26157

Technical Report

Lignocellulosic Biomass to Ethanol Process Design and Economics Utilizing Co-Current Dilute Acid Prehydrolysis and Enzymatic Hydrolysis Current and Futuristic Scenarios

Robert Wooley, Mark Ruth, John Sheehan, Kelly Ibsen
Biotechnology Center for Fuels and Chemicals

Henry Majdeski, Adrian Galvez
Delta-T Corporation

National Renewable Energy Laboratory

1617 Cole Boulevard
Golden, Colorado 80401-3393

NREL is a U.S. Department of Energy Laboratory
Operated by Midwest Research Institute · Battelle · Bechtel

Contract No. DE-AC36-98-GO10337

NOTICE

This report was prepared as an account of work sponsored by an agency of the United States government. Neither the United States government nor any agency thereof, nor any of their employees, makes any warranty, express or implied, or assumes any legal liability or responsibility for the accuracy, completeness, or usefulness of any information, apparatus, product, or process disclosed, or represents that its use would not infringe privately owned rights. Reference herein to any specific commercial product, process, or service by trade name, trademark, manufacturer, or otherwise does not necessarily constitute or imply its endorsement, recommendation, or favoring by the United States government or any agency thereof. The views and opinions of authors expressed herein do not necessarily state or reflect those of the United States government or any agency thereof.

Available to DOE and DOE contractors from:
Office of Scientific and Technical Information (OSTI)
P.O. Box 62
Oak Ridge, TN 37831
Prices available by calling 423-576-8401

Available to the public from:
National Technical Information Service (NTIS)
U.S. Department of Commerce
5285 Port Royal Road
Springfield, VA 22161
703-605-6000 or 800-553-6847
or
DOE Information Bridge
http://www.doe.gov/bridge/home.html

Printed on paper containing at least 50% wastepaper, including 20% postconsumer waste

Appendix G

Process Flow Diagrams

Note: Larger format (11” x 17”) versions of these Process Flow Diagrams are available upon request from rwooley@nrel.gov.

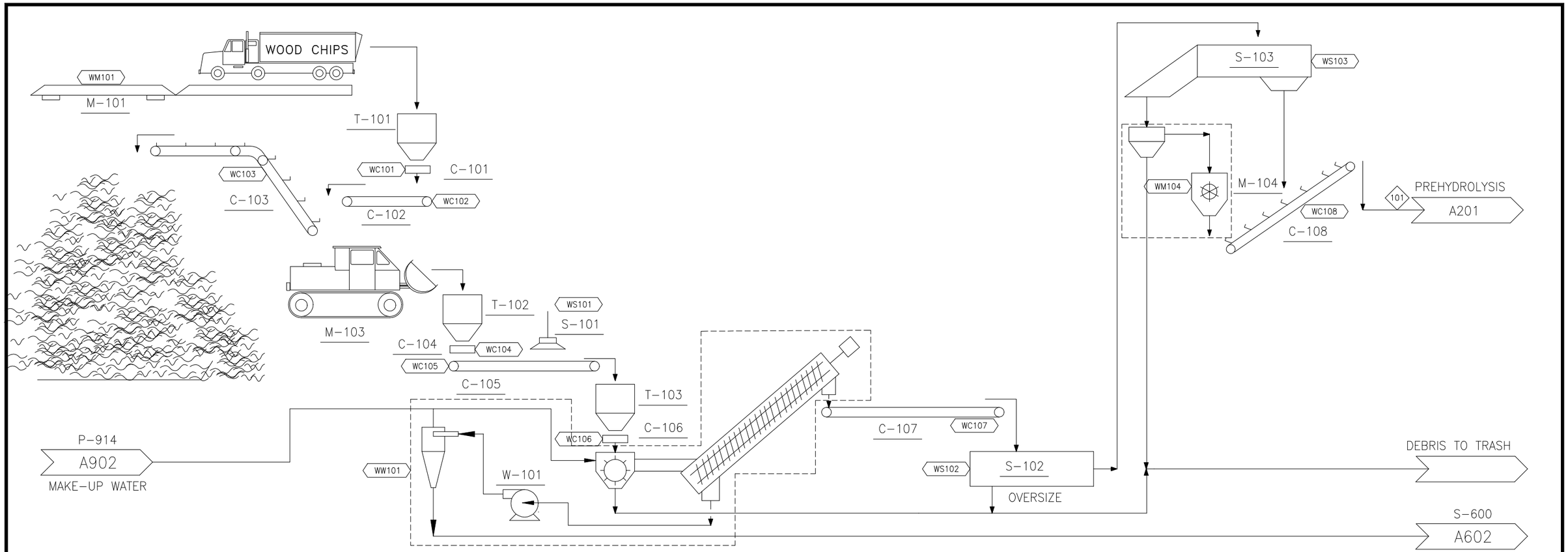

COMPONENT	UNITS	101
Total Flow	kg/hr	159,948
Insoluble Solids	%	52.1%
Soluble Solids	%	0.0%
Temperature	C	20
Pressure	atm	1.00
Vapor Fraction		0.00
Ethanol	kg/hr	
Water	kg/hr	76,615
Glucose (SS)	kg/hr	
Xylose (SS)	kg/hr	
Arabinose (SS)	kg/hr	
Other Sugars (SS)	kg/hr	
Cellobiose (SS)	kg/hr	
Glucose Oligomers (SS)	kg/hr	
Xylose Oligomers (SS)	kg/hr	
Other Oligomers (SS)	kg/hr	
Corn Steep Liquor (SS)	kg/hr	
(NH4)2SO4 (SS)	kg/hr	
NH4Acetate (SS)	kg/hr	
Others (Soluble Solids)	kg/hr	25
Acetic Acid	kg/hr	
Sulfuric Acid	kg/hr	
Furfural	kg/hr	
HMF	kg/hr	
Carbon Dioxide	kg/hr	
Methane	kg/hr	
Oxygen	kg/hr	
Nitrogen	kg/hr	
Ammonia	kg/hr	
NH4OH	kg/hr	
Others	kg/hr	
Cellulose (IS)	kg/hr	35,556
Xylan (IS)	kg/hr	15,879
Arabinan (IS)	kg/hr	658
Other Sugar Polymers (IS)	kg/hr	3,474
Cellulase (IS)	kg/hr	
Biomass (IS)	kg/hr	
Zymo (IS)	kg/hr	
Lignin (IS)	kg/hr	23,068
Gypsum (IS)	kg/hr	
Ca(OH)2 (IS)	kg/hr	
Others (Insoluble Solids)	kg/hr	4,674
Enthalpy Flow (millions)	Kcal/hr	-455.2
Average Density	g/ml	1.217

Heat Stream No.	MM kcal/hr

Work Stream No.	kW
WC101	2.98
WC102	11.19
WC103	22.37
WC104	2.98
WC105	37.29
WC106	0.75
WC107	11.18
WC108	27.96
WM101	6.22
WM104	391.50
WS101	0.00
WS102	29.83
WS103	29.83
WW101	149.10

Eq. No.	Equipment Name	Req.	Spare	Equipment Type	Mat Const.
C-101	Hopper Feeder	3	1	VIBRATING-FEEDER	CS
C-102	Transfer Belt Conveyor	1	0	BELT	CS
C-103	Radial Stacker Conveyor	1	0	BELT	CS
C-104	Reclaim Hopper Feeder	2	0	VIBRATING-FEEDER	CS
C-105	Reclaim Hopper Conveyor	1	0	BELT	CS
C-106	Chip Washer Feeder	4	0	VIBRATING-FEEDER	CS
C-107	Scalper Screen Feeder	2	0	BELT	CS
C-108	Pretreatment Feeder	1	0	BELT	CS
M-101	Hydraulic Truck Dump with Scale	3	1	TRUCK-SCALE	CS
M-103	Front End Loaders	2	0	LOADER	
M-104	Disk Refiner System	1	0	MISCELLANEOUS	SS316
S-101	Magnetic Separator	1	0	MAGNET	
S-102	Scalper Screener	2	0	SCREEN	CS
S-103	Chip Thickness Screen	1	0	SCREEN	CS
T-101	Dump Hopper	3	1	VERTICAL-VESSEL	CS
T-102	Reclaim Hopper	2	0	VERTICAL-VESSEL	CS
T-103	Washing/Refining Surge Bin	4	0	VERTICAL-VESSEL	CS
W-101	Chip Washer System	4	0	MISCELLANEOUS	SS304;SS316

VER	DESCRIPTION	DATE
A	SUBCONTRACTOR UPDATE	10/98
B	BASECASE UPDATE	11/98
C	DESIGN REPORT	2/99
D	FINAL 1999 DESIGN REPORT	6/99
		LL 6/23/99

NREL
NATIONAL RENEWABLE ENERGY LABORATORY
Biotechnology Center For Fuels And Chemicals

SECTION A100
WOOD CHIP FEED HANDLING

R9906A.xls | PFD-P100-A101 | D

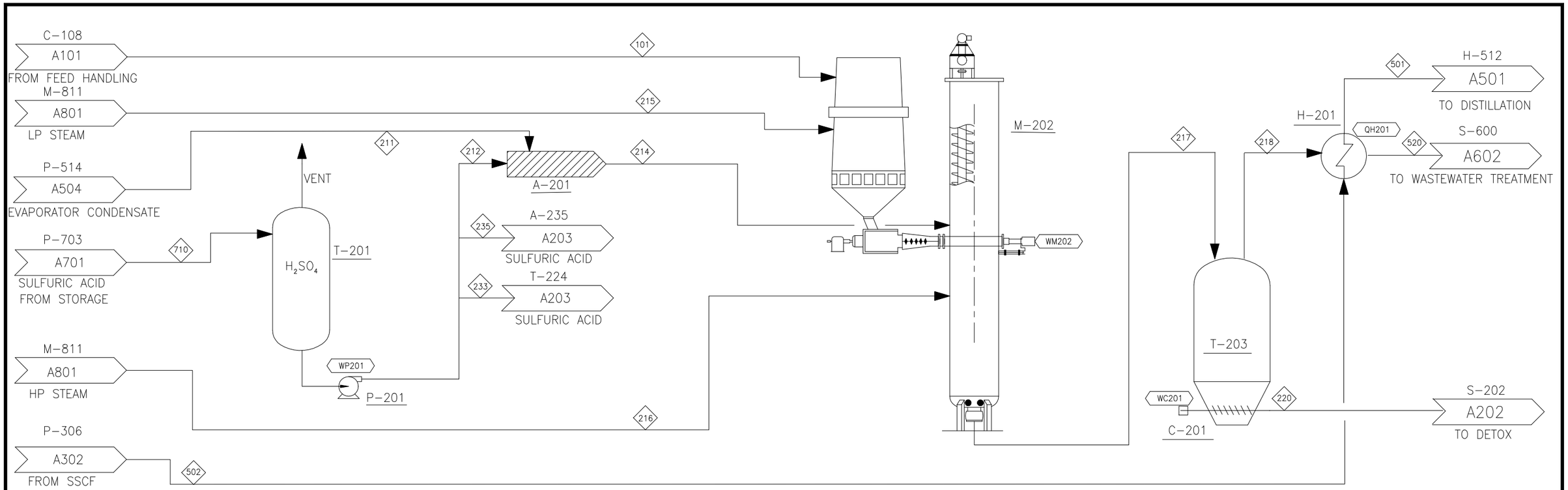

COMPONENT	UNITS	101	211	212	214	215	216	217	218	220	233	235	501	502	520	710
Total Flow	kg/hr	159,948	47,637	921	48,559	16,960	44,596	270,063	45,134	224,928	304	641	380,209	380,209	45,134	1,867
Insoluble Solids	%	52.1%	0.0%	0.0%	0.0%	0.0%	0.0%	21.8%	0.0%	26.1%	0.0%	0.0%	8.3%	8.3%	0.0%	0.0%
Soluble Solids	%	0.0%	0.3%	0.0%	0.3%	0.0%	0.0%	7.9%	0.1%	9.4%	0.0%	0.0%	2.9%	2.9%	0.1%	0.0%
Temperature	C	20	74	20	74	164	268	190	101	101	20	20	95	30	100	20
Pressure	atm	1.00	3.00	3.40	4.00	4.42	13.00	12.20	1.00	1.00	3.40	3.40	4.00	0.90	1.00	1.00
Vapor Fraction		0.00	0.00	0.00	0.00	1.00	1.00	0.00	1.00	0.00	0.00	0.00	0.00	0.00	0.07	0.00
Ethanol	kg/hr		38		38			38	29	9			18,701	18,701	29	
Water	kg/hr	76,615	47,092		47,092	16,960	44,596	183,384	43,822	139,562			308,205	308,205	43,822	
Glucose (SS)	kg/hr							2,568		2,568			219	219		
Xylose (SS)	kg/hr		0		0			13,533	0	13,533			721	721	0	
Arabinose (SS)	kg/hr		0		0			561	0	561			569	569	0	
Other Sugars (SS)	kg/hr							2,895		2,895			2,936	2,936		
Cellobiose (SS)	kg/hr							263		263			383	383		
Glucose Oligomers (SS)	kg/hr							423		423			3,021	3,021		
Xylose Oligomers (SS)	kg/hr		0		0			827	0	827			1,006	1,006	0	
Other Oligomers (SS)	kg/hr															
Corn Steep Liquor (SS)	kg/hr		130		130			130	31	99			2,327	2,327	31	
(NH4)2SO4 (SS)	kg/hr															
NH4Acetate (SS)	kg/hr															
Others (Soluble Solids)	kg/hr	25						25		25			29	29		
Acetic Acid	kg/hr		205		205			4,071	265	3,806			2,545	2,545	265	
Sulfuric Acid	kg/hr		0	921	921			921	0	921	304	641	295	295	0	1,867
Furfural	kg/hr		117		117			1,203	736	466			1,010	1,010	736	
HMF	kg/hr		39		39			405	248	157			340	340	248	
Carbon Dioxide	kg/hr												487	487		
Methane	kg/hr															
Oxygen	kg/hr												0	0		
Nitrogen	kg/hr												0	0		
Ammonia	kg/hr		0		0			0	0	0			12	12	0	
NH4OH	kg/hr															
Others	kg/hr		15		15			15	3	12			5,787	5,787	3	
Cellulose (IS)	kg/hr	35,556						32,747		32,747			3,631	3,631		
Xylan (IS)	kg/hr	15,879						794		794			794	794		
Arabinan (IS)	kg/hr	658						33		33			33	33		
Other Sugar Polymers (IS)	kg/hr	3,474						174		174			164	164		
Cellulase (IS)	kg/hr												624	624		
Biomass (IS)	kg/hr												245	245		
Zymo (IS)	kg/hr												1,061	1,061		
Lignin (IS)	kg/hr	23,068						23,068		23,068			23,068	23,068		
Gypsum (IS)	kg/hr												8	8		
Ca(OH)2 (IS)	kg/hr															
Others (Insoluble Solids)	kg/hr	4,674						1,986		1,986			1,986	1,986		
Enthalpy Flow (millions)	Kcal/hr	-455.2	-177.2	-1.8	-179.0	-53.3	-138.0	-825.4	-140.1	-685.3	-0.6	-1.2	-1295.5	-1317.5	-162.2	-3.6
Average Density	g/ml	1.217	0.945	3.102	0.951	0.002	0.005	1.000	0.001	1.124	3.102	3.102	0.971	0.960	0.009	3.102

Heat Stream No.	MM kcal/hr
QH201	-22.06

Work Stream No.	kW
WC201	36.96
WM202	863.08
WP201	0.39

Eq. No.	Equipment Name	Req.	Spare	Equipment Type	Mat Const.
A-201	In-line Sulfuric Acid Mixer	1	0	STATIC	SS304
C-201	Hydrolyzate Screw Conveyor	1	0	SCREW	SS316
H-201	Beer Column Feed Economizer	2	1	SHELL-TUBE	304SS
M-202	Prehydrolysis/Screw Feeder/Impregnator Reac	1	0	SCREW	HASTELLOY-C 200;S
P-201	Sulfuric Acid Pump	1	1	CENTRIFUGAL	SS304
T-201	Sulfuric Acid Storage	1	0	VERTICAL-VESSEL	PLASTIC
T-203	Blowdown Tank	1	0	VERTICAL-VESSEL	SS316

VER	DESCRIPTION	DATE
A	SUBCONTRACTOR UPDATE	4/98
B	BASECASE UPDATE	9/98
C	DESIGN REPORT	2/99
D	FINAL 1999 DESIGN REPORT	6/99
		LL 6/23/99

NREL NATIONAL RENEWABLE ENERGY LABORATORY
Biotechnology Center For Fuels And Chemicals

SECTION A200
PREHYDROLYSIS

R9906A.xls | PFD-P100-A201 | D

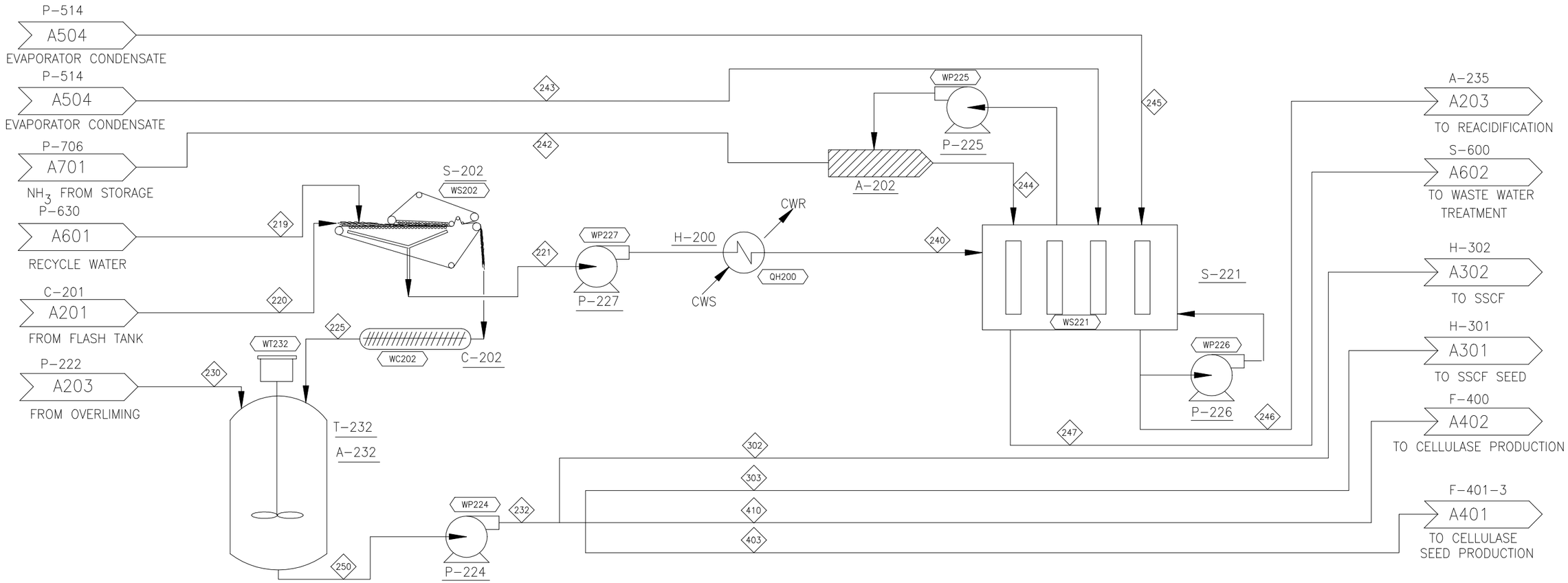

COMPONENT	UNITS	219	220	221	225	230	232	240	242	243	244	245	246	247	250	302	303	403	410
Total Flow	kg/hr	131,896	224,928	209,657	147,167	215,571	362,738	209,657	1,139	65,828	66,967	29,862	213,845	92,641	362,738	309,244	34,360	957	18,176
Insoluble Solids	%	0.2%	26.1%	0.1%	40.0%	0.0%	16.2%	0.1%	0.0%	0.0%	0.0%	0.0%	0.1%	0.0%	16.2%	16.2%	16.2%	16.2%	16.2%
Soluble Solids	%	1.1%	9.4%	7.6%	4.6%	7.4%	6.3%	7.6%	0.0%	0.0%	0.0%	0.3%	7.5%	4.9%	6.3%	6.3%	6.3%	6.3%	6.3%
Temperature	C	47	101	75	75	51	59	40	20	73	50	74	40	40	59	59	59	59	59
Pressure	atm	1.00	1.00	1.00	1.00	1.00	1.00	1.00	17.00	3.00	3.00	3.00	3.00	3.00	1.00	1.00	1.00	1.00	1.00
Vapor Fraction		0.00	0.00	0.00	0.00	0.00	0.00	0.00	0.00	0.00	0.00	0.00	0.00	0.00	0.00	0.00	0.00	0.00	0.00
Ethanol	kg/hr	18	9	19	8	43	52	19				24	43		52	44	5	0	3
Water	kg/hr	128,033	139,562	188,193	79,402	197,587	276,989	188,193		65,828	64,623	29,520	195,535	87,893	276,989	236,141	26,238	731	13,880
Glucose (SS)	kg/hr	0	2,568	1,806	762	1,802	2,564	1,806					1,806		2,564	2,186	243	7	128
Xylose (SS)	kg/hr	109	13,533	9,594	4,048	9,572	13,620	9,594				0	9,594		13,620	11,611	1,290	36	682
Arabinose (SS)	kg/hr	86	561	455	192	454	646	455				0	455		646	551	61	2	32
Other Sugars (SS)	kg/hr	444	2,895	2,348	991	2,343	3,333	2,348					2,348		3,333	2,842	316	9	167
Cellobiose (SS)	kg/hr	58	263	225	95	225	320	225					225		320	273	30	1	16
Glucose Oligomers (SS)	kg/hr	456	423	618	261	617	878	618					618		878	748	83	2	44
Xylose Oligomers (SS)	kg/hr	152	827	688	290	687	977	688				0	688		977	833	93	3	49
Other Oligomers (SS)	kg/hr																		
Corn Steep Liquor (SS)	kg/hr	191	99	204	86	285	371	204				82	285		371	316	35	1	19
(NH4)2SO4 (SS)	kg/hr													915					
NH4Acetate (SS)	kg/hr													3,606					
Others (Soluble Solids)	kg/hr	3	25	20	8	20	28	20					20		28	24	3	0	1
Acetic Acid	kg/hr	450	3,806	2,993	1,263	311	1,574	2,993				129	312		1,574	1,342	149	4	79
Sulfuric Acid	kg/hr	45	921	679	287		287	679				0			287	244	27	1	14
Furfural	kg/hr	467	466	657	277	728	1,005	657				73	730		1,005	857	95	3	50
HMF	kg/hr	157	157	221	93	245	339	221				25	246		339	289	32	1	17
Carbon Dioxide	kg/hr	0		0	0	0	0	0					0		0	0	0	0	0
Methane	kg/hr																		
Oxygen	kg/hr																		
Nitrogen	kg/hr																		
Ammonia	kg/hr	10	0	7	3		3	7	1,139			0		7	3	2	0	0	0
NH4OH	kg/hr										2,344			219					
Others	kg/hr	889	12	634	267	642	909	634				9	643		909	775	86	2	46
Cellulose (IS)	kg/hr	15	32,747	164	32,598	1	32,599	164					164		32,599	27,792	3,088	86	1,634
Xylan (IS)	kg/hr	3	794	4	793	0	793	4					4		793	676	75	2	40
Arabinan (IS)	kg/hr	0	33	0	33	0	33	0					0		33	28	3	0	2
Other Sugar Polymers (IS)	kg/hr	1	174	1	174	0	174	1					1		174	148	16	0	9
Cellulase (IS)	kg/hr	66		0	65	0	65	0					0		65	56	6	0	3
Biomass (IS)	kg/hr	26		0	26	0	26	0					0		26	22	2	0	1
Zymo (IS)	kg/hr	112		1	111	0	111	1					1		111	95	11	0	6
Lignin (IS)	kg/hr	97	23,068	116	23,049	1	23,050	116					116		23,050	19,651	2,183	61	1,155
Gypsum (IS)	kg/hr	0		0	0	8	8	0					0		8	7	1	0	0
Ca(OH)2 (IS)	kg/hr																		
Others (Insoluble Solids)	kg/hr	8	1,986	10	1,985	0	1,985	10					10		1,985	1,692	188	5	99
Enthalpy Flow (millions)	Kcal/hr	-488.6	-685.3	-739.4	-434.5	-772.9	-1207.5	-746.0	-1.1	-246.3	-244.3	-111.1	-768.0	-347.3	-1207.5	-1029.4	-114.4	-3.2	-60.5
Average Density	g/ml	0.979	1.124	0.976	1.196	0.998	1.078	1.011	0.610	0.945	0.978	0.945	1.010	0.914	1.078	1.078	1.078	1.078	1.078

Heat Stream No.	MM kcal/hr
QH200	6.60

Work Stream No.	kW
WC202	44.59
WP224	59.04
WP225	15.21
WP226	23.12
WP227	46.94
WS202	44.60
WS221	2.24
WT232	25.55

Eq. No.	Equipment Name	Req.	Spare	Equipment Type	Mat Const.
A-202	In-line NH3 Mixer	1	0	STATIC	SS304
A-232	Reslurrying Tank Agitator	1	0	FIXED-PROP	SS
C-202	Wash Solids Screw Conveyor	4	0	SCREW	SS304
H-200	Hydrolyzate Cooler	1	0	SHELL-TUBE	304SS;CS
P-224	Fermentation Feed Pump	2	1	ROTARY-LOBE	304SS
P-225	ISEP Elution Pump	1	1	CENTRIFUGAL	SS304
P-226	ISEP Reload Pump	1	1	CENTRIFUGAL	SS304
P-227	ISEP Hydrolyzate Feed Pump	1	1	CENTRIFUGAL	SS304
S-202	Pre-IX Belt Filter Press	8	0	BELT-FILTER-PRESS	SS316
S-221	ISEP	1	0	CONT-IX	SS316;POLYPROP;R
T-232	Slurrying Tank	1	0	FLAT-BTM-STORAGE	SS304

VER	DESCRIPTION	DATE
A	SUBCONTRACTOR UPDATE	5/97
B	BASECASE UPDATE	9/98
C	DESIGN REPORT	2/99
D	FINAL 1999 DESIGN REPORT	6/99
		LL 6/23/99

NREL
NATIONAL RENEWABLE ENERGY LABORATORY
Biotechnology Center For Fuels And Chemicals

SECTION A200
DETOXIFICATION

R9906A.xls | PFD-P100-A202 | D

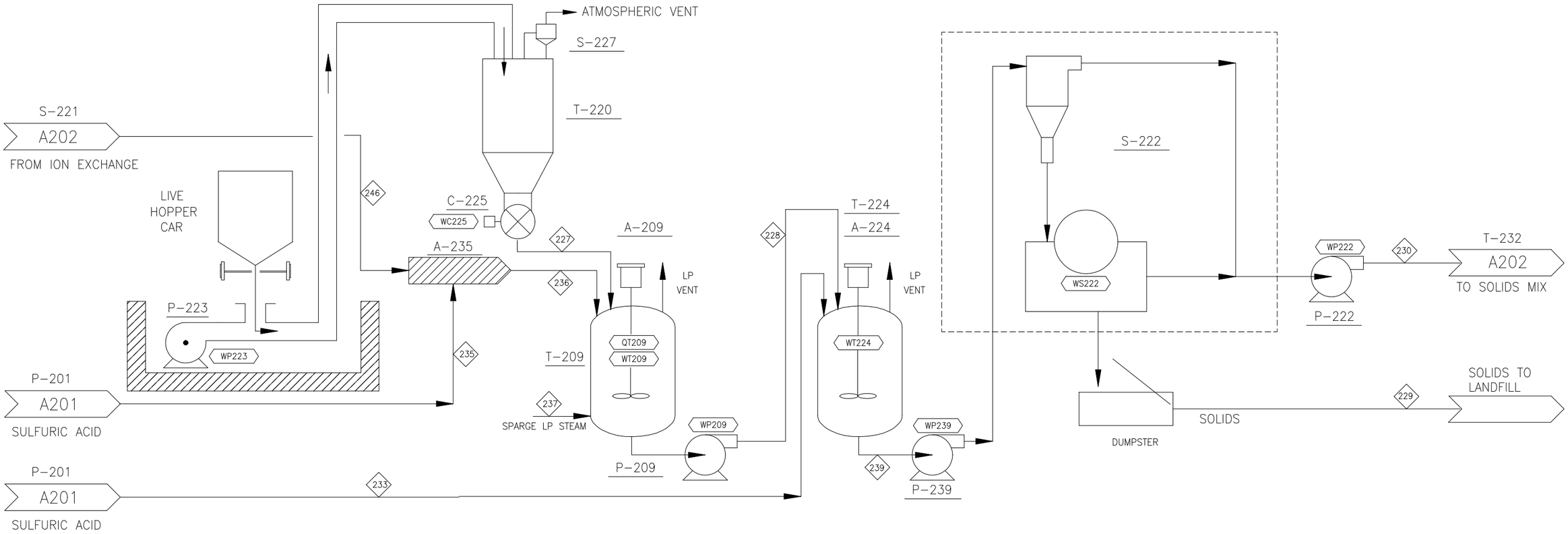

COMPONENT	UNITS	227	228	229	230	233	235	236	237	239	246
Total Flow	kg/hr	714	217,699	2,433	215,571	304	641	214,486	2,499	218,003	213,845
Insoluble Solids	%	100.0%	0.8%	79.9%	0.0%	0.0%	0.0%	0.1%	0.0%	0.9%	0.1%
Soluble Solids	%	0.0%	7.4%	1.5%	7.4%	0.0%	0.0%	7.5%	0.0%	7.4%	7.5%
Temperature	C		50	51	51	20	20	40	164	51	40
Pressure	atm	1.00	1.00	1.00	1.00	3.40	3.40	3.00	4.42	1.00	3.00
Vapor Fraction		0.00	0.00	0.00	0.00	0.00	0.00	0.00	1.00	0.00	0.00
Ethanol	kg/hr		43	0	43			43		43	43
Water	kg/hr		198,034	447	197,587			195,535	2,499	198,034	195,535
Glucose (SS)	kg/hr		1,806	4	1,802			1,806		1,806	1,806
Xylose (SS)	kg/hr		9,594	22	9,572			9,594		9,594	9,594
Arabinose (SS)	kg/hr		455	1	454			455		455	455
Other Sugars (SS)	kg/hr		2,348	5	2,343			2,348		2,348	2,348
Cellobiose (SS)	kg/hr		225	1	225			225		225	225
Glucose Oligomers (SS)	kg/hr		618	1	617			618		618	618
Xylose Oligomers (SS)	kg/hr		688	2	687			688		688	688
Other Oligomers (SS)	kg/hr										
Corn Steep Liquor (SS)	kg/hr		285	1	285			285		285	285
(NH4)2SO4 (SS)	kg/hr										
NH4Acetate (SS)	kg/hr										
Others (Soluble Solids)	kg/hr		20	0	20			20		20	20
Acetic Acid	kg/hr		312	1	311			312		312	312
Sulfuric Acid	kg/hr					304	641	641			
Furfural	kg/hr		730	2	728			730		730	730
HMF	kg/hr		246	1	245			246		246	246
Carbon Dioxide	kg/hr		0	0	0			0		0	0
Methane	kg/hr										
Oxygen	kg/hr										
Nitrogen	kg/hr										
Ammonia	kg/hr										
NH4OH	kg/hr										
Others	kg/hr		643	1	642			643		643	643
Cellulose (IS)	kg/hr		164	163	1			164		164	164
Xylan (IS)	kg/hr		4	4	0			4		4	4
Arabinan (IS)	kg/hr		0	0	0			0		0	0
Other Sugar Polymers (IS)	kg/hr		1	1	0			1		1	1
Cellulase (IS)	kg/hr		0	0	0			0		0	0
Biomass (IS)	kg/hr		0	0	0			0		0	0
Zymo (IS)	kg/hr		1	1	0			1		1	1
Lignin (IS)	kg/hr		116	115	1			116		116	116
Gypsum (IS)	kg/hr		1,125	1,651	8			0		1,659	0
Ca(OH)2 (IS)	kg/hr	714	230								
Others (Insoluble Solids)	kg/hr		10	10	0			10		10	10
Enthalpy Flow (millions)	Kcal/hr	-2.3	-779.4	-7.0	-772.9	-0.6	-1.2	-769.2	-7.9	-779.9	-768.0
Average Density	g/ml	2.343	1.008	1.912	0.998	3.102	3.102	1.011	0.002	1.009	1.010

Heat Stream No.	MM kcal/hr
QT209	38.38

Work Stream No.	kW
WC225	0.25
WP209	47.39
WP222	47.16
WP223	8.57
WP239	31.69
WS222	24.29
WT209	21.37
WT224	85.62

Eq. No.	Equipment Name	Req.	Spare	Equipment Type	Mat Const.
A-209	Overliming Tank Agitator	1	0	FIXED-PROP	SS
A-224	Reacidification Tank Agitator	1	0	FIXED-PROP	SS
A-235	In-line Acidification Mixer	1	0	STATIC	304SS
C-225	Lime Solids Feeder	1	0	ROTARY-VALVE	A285C
P-209	Overlimed Hydrolyzate Pump	1	1	CENTRIFUGAL	304SS
P-222	Filtered Hydrolyzate Pump	1	1	CENTRIFUGAL	304SS
P-223	Lime Unloading Blower	1	0	CENTRIFUGAL	C.S.
P-239	Reacidified Liquor Pump	1	1	CENTRIFUGAL	SS304
S-222	Hydroclone & Rotary Drum Filter	1	0	ROTARY-DRUM	EPOXY LINED
S-227	LimeDust Vent Baghouse	1	0	FABRIC-FILTER	A285C;POLYESTER
T-209	Overliming Tank	1	0	VERTICAL-VESSEL	SS304
T-220	Lime Storage Bin	1	0	LIVE-BTM-BIN	CS
T-224	Reacidification Tank	1	0	FLAT-BTM-STORAGE	SS304

VER	DESCRIPTION	DATE
A	SUBCONTRACTOR UPDATE	4/98
B	BASECASE UPDATE	9/98
C	DESIGN REPORT	2/99
D	FINAL 1999 DESIGN REPORT	6/99
		LL 6/23/99

NREL NATIONAL RENEWABLE ENERGY LABORATORY
Biotechnology Center For Fuels And Chemicals

SECTION A200
LIME ADDITION

R9906A.xls | PFD-P100-A203 | D

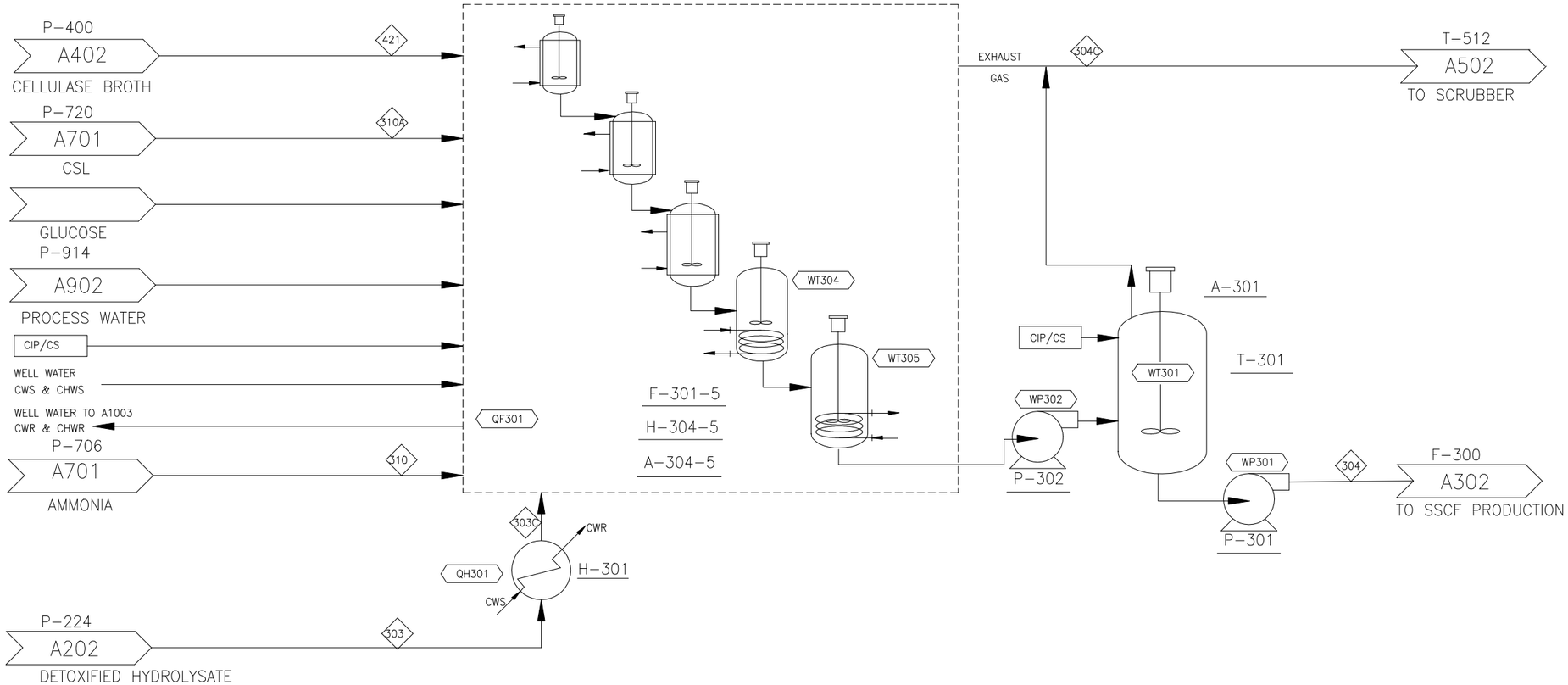

COMPONENT	UNITS	303	303C	304	304C	310	310A	421
Total Flow	kg/hr	34,360	34,360	37,997	876	8	583	3,922
Insoluble Solids	%	16.2%	16.2%	13.8%	0.0%	0.0%	0.0%	5.6%
Soluble Solids	%	6.3%	6.3%	3.8%	0.0%	0.0%	100.0%	1.7%
Temperature	C	59	30	30	30	35	35	28
Pressure	atm	1.00	1.00	1.00	1.00	1.00	1.00	1.66
Vapor Fraction		0.00	0.00	0.00	1.00	1.00	0.00	0.00
Ethanol	kg/hr	5	5	929	7			0
Water	kg/hr	26,238	26,238	29,713	15			3,549
Glucose (SS)	kg/hr	243	243	60				
Xylose (SS)	kg/hr	1,290	1,290	129				
Arabinose (SS)	kg/hr	61	61	61				
Other Sugars (SS)	kg/hr	316	316	316				
Cellobiose (SS)	kg/hr	30	30	33				3
Glucose Oligomers (SS)	kg/hr	83	83	96				13
Xylose Oligomers (SS)	kg/hr	93	93	101				8
Other Oligomers (SS)	kg/hr							
Corn Steep Liquor (SS)	kg/hr	35	35	661	0		583	43
(NH4)2SO4 (SS)	kg/hr							
NH4Acetate (SS)	kg/hr							
Others (Soluble Solids)	kg/hr	3	3	3				0
Acetic Acid	kg/hr	149	149	198	0			15
Sulfuric Acid	kg/hr	27	27	30	0			2
Furfural	kg/hr	95	95	101	0			6
HMF	kg/hr	32	32	34	0			2
Carbon Dioxide	kg/hr	0	0	43	838			0
Methane	kg/hr							
Oxygen	kg/hr			0	15			0
Nitrogen	kg/hr			0	0			0
Ammonia	kg/hr	0	0			8		
NH4OH	kg/hr							
Others	kg/hr	86	86	252	0			60
Cellulose (IS)	kg/hr	3,088	3,088	2,470				
Xylan (IS)	kg/hr	75	75	79				4
Arabinan (IS)	kg/hr	3	3	3				0
Other Sugar Polymers (IS)	kg/hr	16	16	16				
Cellulase (IS)	kg/hr	6	6	62				56
Biomass (IS)	kg/hr	2	2	25				22
Zymo (IS)	kg/hr	11	11	75				3
Lignin (IS)	kg/hr	2,183	2,183	2,307				123
Gypsum (IS)	kg/hr	1	1	1				0
Ca(OH)2 (IS)	kg/hr							
Others (Insoluble Solids)	kg/hr	188	188	199				11
Enthalpy Flow (milliions)	Kcal/hr	-114.4	-115.2	-129.9	-1.8	0.0	-2.2	-14.3
Average Density	g/ml	1.078	1.102	1.066	0.002	0.001	0.984	1.021

Heat Stream No.	MM kcal/hr
QF301	0.12
QH301	0.79

Work Stream No.	kW
WP301	14.96
WP302	14.96
WT301	20.41
WT304	10.21
WT305	34.02

Eq. No.	Equipment Name	Req.	Spare	Equipment Type	Mat Const.
A-301	Seed Hold Tank Agitator	1	0	FIXED-PROP	SS304
A-304	4th Seed Vessel Agitator	2	0	FIXED-PROP	SS
A-305	5th Seed Vessel Agitator	2	0	FIXED-PROP	SS
F-301	1st SSCF Seed Fermentor	2	0	VERTICAL-VESSEL	SS304
F-302	2nd SSCF Seed Fermentor	2	0	VERTICAL-VESSEL	SS304
F-303	3rd SSCF Seed Fermentor	2	0	VERTICAL-VESSEL	SS304
F-304	4th SSCF Seed Fermentor	2	0	FLAT-BTM-STORAGE	SS304
F-305	5th SSCF Seed Fermentor	2	0	FLAT-BTM-STORAGE	SS304
H-301	SSCF Seed Hydrolyzate Cooler	1	0	PLATE-FRAME	SS304
H-304	4TH Seed Fermentor Coils	1	0	IMMERSED-COIL	SS
H-305	5TH Seed Fermentor Coils	1	0	IMMERSED-COIL	SS
P-301	SSCF Seed Transfer Pump	1	1	ROTARY-LOBE	SS304
P-302	Seed Transfer Pump	2	0	ROTARY-LOBE	SS304
T-301	SSCF Seed Hold Tank	1	0	FLAT-BTM-STORAGE	SS304

VER	DESCRIPTION	DATE
A	SUBCONTRACTOR UPDATE	4/98
B	BASECASE UPDATE	9/98
C	DESIGN REPORT	2/99
D	FINAL 1999 DESIGN REPORT	6/99
		LL 6/23/99

NREL NATIONAL RENEWABLE ENERGY LABORATORY
Biotechnology Center For Fuels And Chemicals

SECTION A300
SSCF SEED & PRODUCTION FERM.

R9906A.xls | PFD-P100-A301 | D

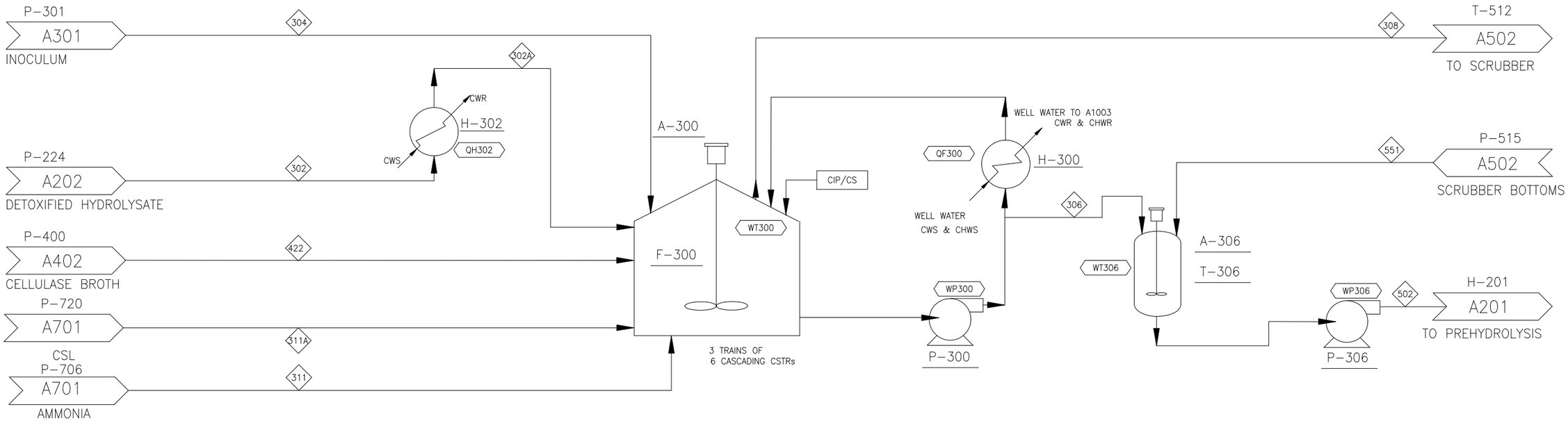

COMPONENT	UNITS	302	302A	304	306	308	311	311A	422	502	551
Total Flow	kg/hr	309,244	309,244	37,997	366,647	16,978	129	959	35,296	380,209	13,562
Insoluble Solids	%	16.2%	16.2%	13.8%	8.6%	0.0%	0.0%	0.0%	5.6%	8.3%	0.0%
Soluble Solids	%	6.3%	6.3%	3.8%	3.1%	0.0%	0.0%	100.0%	1.7%	2.9%	0.0%
Temperature	C	59	34	30	30	30	35	35	28	30	30
Pressure	atm	1.00	1.00	1.00	1.00	1.00	1.00	1.00	1.66	0.90	0.90
Vapor Fraction		0.00	0.00	0.00	0.00	1.00	1.00	0.00	0.00	0.00	0.00
Ethanol	kg/hr	44	44	929	18,365	263			2	18,701	337
Water	kg/hr	236,141	236,141	29,713	295,010	288			31,940	308,205	13,195
Glucose (SS)	kg/hr	2,186	2,186	60	219					219	
Xylose (SS)	kg/hr	11,611	11,611	129	721					721	
Arabinose (SS)	kg/hr	551	551	61	569					569	
Other Sugars (SS)	kg/hr	2,842	2,842	316	2,936					2,936	
Cellobiose (SS)	kg/hr	273	273	33	383				25	383	
Glucose Oligomers (SS)	kg/hr	748	748	96	3,021				119	3,021	
Xylose Oligomers (SS)	kg/hr	833	833	101	1,006				72	1,006	
Other Oligomers (SS)	kg/hr										
Corn Steep Liquor (SS)	kg/hr	316	316	661	2,324	2		959	390	2,327	3
(NH4)2SO4 (SS)	kg/hr										
NH4Acetate (SS)	kg/hr										
Others (Soluble Solids)	kg/hr	24	24	3	29				2	29	
Acetic Acid	kg/hr	1,342	1,342	198	2,543	1			139	2,545	2
Sulfuric Acid	kg/hr	244	244	30	295	0			21	295	0
Furfural	kg/hr	857	857	101	1,003	6			52	1,010	7
HMF	kg/hr	289	289	34	338	2			17	340	2
Carbon Dioxide	kg/hr	0	0	43	471	16,281			0	487	16
Methane	kg/hr										
Oxygen	kg/hr			0	0	134			0	0	0
Nitrogen	kg/hr			0	0	1			1	0	0
Ammonia	kg/hr	2	2		11	0	129			12	0
NH4OH	kg/hr										
Others	kg/hr	775	775	252	5,786	0			538	5,787	0
Cellulose (IS)	kg/hr	27,792	27,792	2,470	3,631					3,631	
Xylan (IS)	kg/hr	676	676	79	794				38	794	
Arabinan (IS)	kg/hr	28	28	3	33				2	33	
Other Sugar Polymers (IS)	kg/hr	148	148	16	164					164	
Cellulase (IS)	kg/hr	56	56	62	624				506	624	
Biomass (IS)	kg/hr	22	22	25	245				199	245	
Zymo (IS)	kg/hr	95	95	75	1,061				24	1,061	
Lignin (IS)	kg/hr	19,651	19,651	2,307	23,068				1,111	23,068	
Gypsum (IS)	kg/hr	7	7	1	8				0	8	
Ca(OH)2 (IS)	kg/hr										
Others (Insoluble Solids)	kg/hr	1,692	1,692	199	1,986				96	1,986	
Enthalpy Flow (millions)	Kcal/hr	-1029.4	-1035.6	-129.9	-1267.1	-36.0	-0.1	-3.6	-128.4	-1317.5	-50.4
Average Density	g/ml	1.078	1.099	1.066	1.035	0.002	0.001	0.984	1.021	0.960	0.983

Heat Stream No.	M M kcal/hr
QF300	5.51
QH302	6.19

Work Stream No.	kW
WP300	896.62
WP306	100.18
WT300	1789.02
WT306	2.65

Eq. No.	Equipment Name	Req.	Spare	Equipment Type	Mat Const.
A-300	SSCF Fermentor Agitators	34	0	FIXED-PROP	SS304
A-306	Beer Surge Tank Agitator	1	0	FIXED-PROP	SS304
F-300	SSCF Fermentors	17	0	FLAT-BTM-STORAGE	SS304
H-300	Fermentation Cooler	17	1	PLATE-FRAME	SS304
H-302	SSCF Hydrolyzate Cooler	3	0	PLATE-FRAME	SS304
P-300	SSCF Recirculation and Transfer Pump	17	1	CENTRIFUGAL	SS304
P-306	Beer Transfer Pump	1	1	CENTRIFUGAL	SS304
T-306	Beer Storage Tank	1	0	FLAT-BTM-STORAGE	SS304

VER	DESCRIPTION	DATE
A	SUBCONTRACTOR UPDATE	4/98
B	BASECASE UPDATE	9/98
C	DESIGN REPORT	2/99
D	FINAL 1999 DESIGN REPORT	6/99

LL 6/23/99

NATIONAL RENEWABLE ENERGY LABORATORY

Biotechnology Center For Fuels And Chemicals

SECTION A300
SSCF SEED & PRODUCTION FERM.

R9906A.xls | PFD-P100-A302 | D

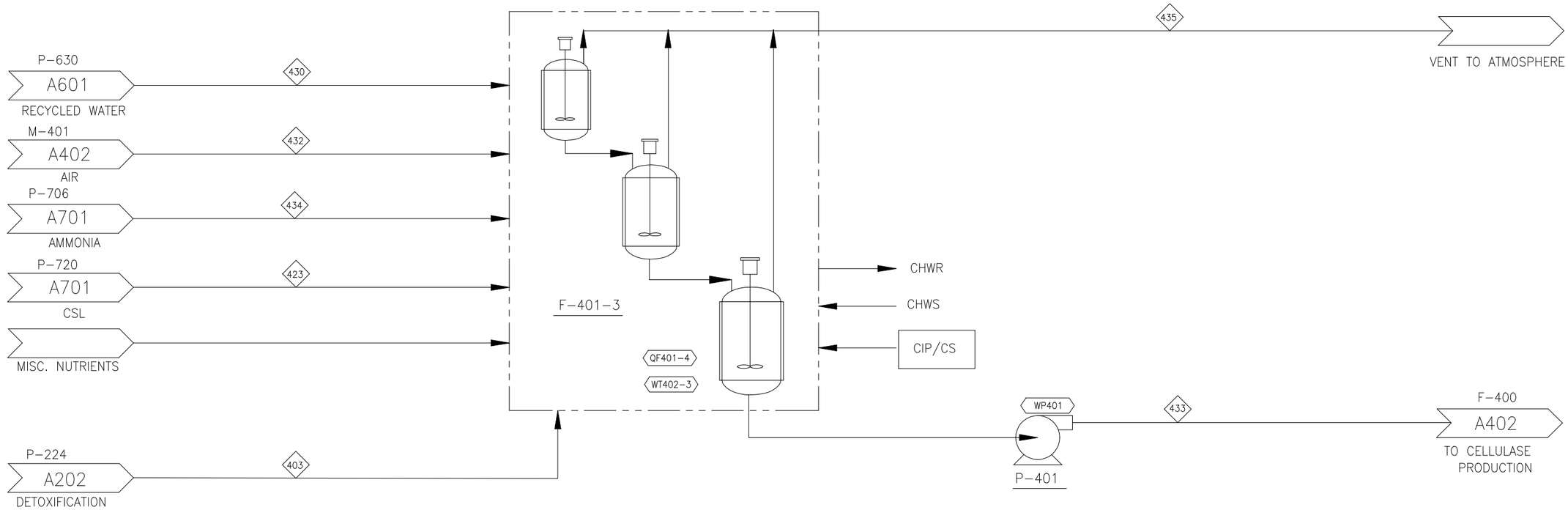

COMPONENT	UNITS	403	423	430	432	433	434	435
Total Flow	kg/hr	957	30	2,147	20,928	2,580	8	21,488
Insoluble Solids	%	16.2%	0.0%	0.2%	0.0%	4.7%	0.0%	0.0%
Soluble Solids	%	6.3%	100.0%	1.1%	0.0%	1.7%	0.0%	0.0%
Temperature	C	59	28	47	40	28	28	28
Pressure	atm	1.00	1.00	1.00	1.00	1.00	1.00	1.00
Vapor Fraction		0.00	0.00	0.00	1.00	0.00	1.00	1.00
Ethanol	kg/hr	0		0		0		0
Water	kg/hr	731		2,084		2,382		501
Glucose (SS)	kg/hr	7		0				
Xylose (SS)	kg/hr	36		2				
Arabinose (SS)	kg/hr	2		1				
Other Sugars (SS)	kg/hr	9		7				
Cellobiose (SS)	kg/hr	1		1		2		
Glucose Oligomers (SS)	kg/hr	2		7		10		
Xylose Oligomers (SS)	kg/hr	3		2		5		
Other Oligomers (SS)	kg/hr							
Corn Steep Liquor (SS)	kg/hr	1	30	3		28		6
(NH4)2SO4 (SS)	kg/hr							
NH4Acetate (SS)	kg/hr							
Others (Soluble Solids)	kg/hr	0		0		0		
Acetic Acid	kg/hr	4		7		10		1
Sulfuric Acid	kg/hr	1		1		1		0
Furfural	kg/hr	3		8		3		7
HMF	kg/hr	1		3		1		2
Carbon Dioxide	kg/hr	0		0		0		145
Methane	kg/hr							
Oxygen	kg/hr				4,395	0		4,292
Nitrogen	kg/hr				16,533	0		16,533
Ammonia	kg/hr	0		0			8	
NH4OH	kg/hr							
Others	kg/hr	2		14		17	0	0
Cellulose (IS)	kg/hr	86		0				
Xylan (IS)	kg/hr	2		0		2		
Arabinan (IS)	kg/hr	0		0		0		
Other Sugar Polymers (IS)	kg/hr	0		0				
Cellulase (IS)	kg/hr	0		1		1		
Biomass (IS)	kg/hr	0		0		48		
Zymo (IS)	kg/hr	0		2		2		
Lignin (IS)	kg/hr	61		2		62		
Gypsum (IS)	kg/hr	0		0		0		
Ca(OH)2 (IS)	kg/hr							
Others (Insoluble Solids)	kg/hr	5		0		5		
Enthalpy Flow (millions)	Kcal/hr	-3.2	-0.1	-8.0	0.1	-9.5	0.0	-1.9
Average Density	g/ml	1.078	0.991	0.979	0.001	1.018	0.001	0.001

Heat Stream No.	MM kcal/hr
QF401-4	0.21

Work Stream No.	kW
WP401	0.75
WT402-3	364.67

Eq. No.	Equipment Name	Req.	Spare	Equipment Type	Mat Const.
F-401	1st Cellulase Seed Fermentor	3	0	VERTICAL-VESSEL	SS304
F-402	2nd Cellulase Seed Fermentor	3	0	VERTICAL-VESSEL	SS304
F-403	3rd Cellulase Seed Fermentor	3	0	VERTICAL-VESSEL	SS304
P-401	Cellulase Seed Pump	1	1	ROTARY-LOBE	SS316

VER	DESCRIPTION	DATE
A	SUBCONTRACTOR UPDATE	4/98
B	BASECASE UPDATE	9/98
C	DESIGN REPORT	2/99
D	FINAL 1999 DESIGN REPORT	6/99
		LL 6/23/99

NREL
NATIONAL RENEWABLE ENERGY LABORATORY
Biotechnology Center For Fuels And Chemicals

SECTION A400
CELLULASE SEED FERMENTATION

R9906A.xls | PFD-P100-A401 | D

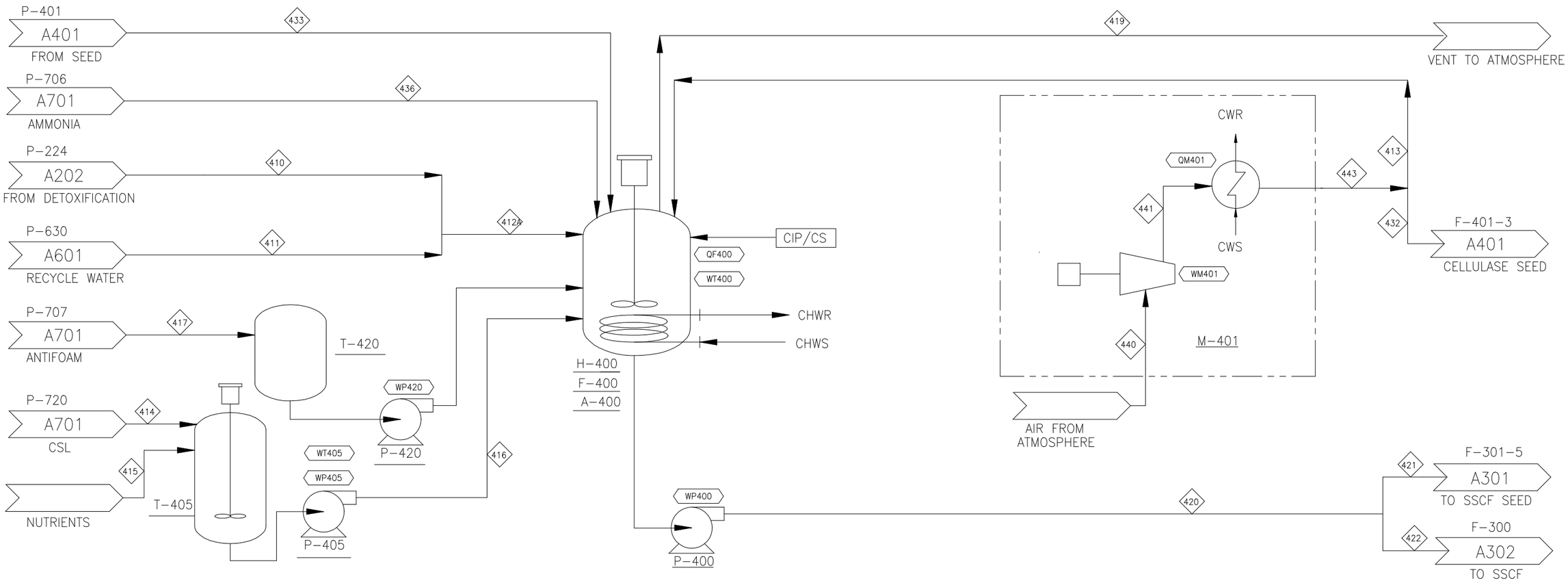

COMPONENT	UNITS	410	411	412A	413	414	415	416	417	419	420	421	422	432	433	436	440	441	443
Total Flow	kg/hr	18,176	22,784	40,960	301,966	406	174	580	227	307,253	39,217	3,922	35,296	20,928	2,580	157	322,894	322,894	322,894
Insoluble Solids	%	16.2%	0.2%	7.3%	0.0%	0.0%	0.0%	0.0%	0.0%	0.0%	5.6%	5.6%	5.6%	0.0%	4.7%	0.0%	0.0%	0.0%	0.0%
Soluble Solids	%	6.3%	1.1%	3.4%	0.0%	100.0%	0.0%	69.9%	0.0%	0.0%	1.7%	1.7%	1.7%	0.0%	1.7%	0.0%	0.0%	0.0%	0.0%
Temperature	C	59	47	48	40	28	28	28	28	28	28	28	28	40	28	28	20	169	40
Pressure	atm	1.00	1.00	1.00	1.00	1.00	1.00	1.00	1.00	1.66	1.66	1.66	1.66	1.00	1.00	1.00	1.00	3.00	1.00
Vapor Fraction		0.00	0.00	0.00	1.00	0.00	0.00	0.00	0.00	1.00	0.00	0.00	0.00	1.00	0.00	1.00	1.00	1.00	1.00
Ethanol	kg/hr	3	3	6						4	2	0	2		0				
Water	kg/hr	13,880	22,117	35,996						4,263	35,489	3,549	31,940		2,382				
Glucose (SS)	kg/hr	128	0	128															
Xylose (SS)	kg/hr	682	19	701															
Arabinose (SS)	kg/hr	32	15	47															
Other Sugars (SS)	kg/hr	167	77	244															
Cellobiose (SS)	kg/hr	16	10	26							28	3	25		2				
Glucose Oligomers (SS)	kg/hr	44	79	123							133	13	119		10				
Xylose Oligomers (SS)	kg/hr	49	26	75							80	8	72		5				
Other Oligomers (SS)	kg/hr																		
Corn Steep Liquor (SS)	kg/hr	19	33	52		406		406		52	433	43	390		28				
(NH4)2SO4 (SS)	kg/hr																		
NH4Acetate (SS)	kg/hr																		
Others (Soluble Solids)	kg/hr	1	1	2							2	0	2		0				
Acetic Acid	kg/hr	79	78	157						12	155	15	139		10				
Sulfuric Acid	kg/hr	14	8	22						0	24	2	21		1				
Furfural	kg/hr	50	81	131						77	58	6	52		3				
HMF	kg/hr	17	27	44						26	19	2	17		1				
Carbon Dioxide	kg/hr	0	0	0						2,950	1	0	0		0				
Methane	kg/hr																		
Oxygen	kg/hr				63,413					61,298	0	0	0	4,395	0		67,808	67,808	67,808
Nitrogen	kg/hr				238,553					238,552	1	0	1	16,533	0		255,086	255,086	255,086
Ammonia	kg/hr	0	2	2												145			
NH4OH	kg/hr																		
Others	kg/hr	46	154	199			174	174	227	19	598	60	538		17	12			
Cellulose (IS)	kg/hr	1,634	3	1,636															
Xylan (IS)	kg/hr	40	1	40							42	4	38		2				
Arabinan (IS)	kg/hr	2	0	2							2	0	2		0				
Other Sugar Polymers (IS)	kg/hr	9	0	9															
Cellulase (IS)	kg/hr	3	11	15							563	56	506		1				
Biomass (IS)	kg/hr	1	4	6							221	22	199		48				
Zymo (IS)	kg/hr	6	19	25							27	3	24		2				
Lignin (IS)	kg/hr	1,155	17	1,172							1,234	123	1,111		62				
Gypsum (IS)	kg/hr	0	0	0							0	0	0		0				
Ca(OH)2 (IS)	kg/hr																		
Others (Insoluble Solids)	kg/hr	99	1	101							106	11	96		5				
Enthalpy Flow (millions)	Kcal/hr	-60.5	-84.4	-145.1	1.1	-1.5	-0.7	-2.2	-0.1	-20.0	-142.6	-14.3	-128.4	0.1	-9.5	-0.1	-0.4	11.3	1.2
Average Density	g/ml	1.078	0.979	1.026	0.001	0.991	0.991	0.991	0.888	0.002	1.021	1.021	1.021	0.001	1.018	0.001	0.001	0.002	0.001

Heat Stream No.	MM kcal/hr
QF400	6.81
QM401	10.14

Work Stream No.	kW
WM401	13613.11
WP400	5.64
WP405	0.09
WP420	0.03
WT400	3490.56
WT405	255.56

Eq. No.	Equipment Name	Req.	Spare	Equipment Type	Mat Const.
A-400	Cellulase Fermentor Agitators	11	0	AXIAL-IMPELLER	SS304
F-400	Cellulase Fermentors	11	0	VERTICAL-VESSEL	SS304L
H-400	Cellulase Fermentation Cooler	11	0	IMMERSED-COIL	SS304
M-401	Fermentor Air Compressor Package	2	1	CENTRIFUGAL	CS
P-400	Cellulase Transfer Pump	1	1	CENTRIFUGAL	SS
P-405	Media Pump	1	1	CENTRIFUGAL	SS
P-420	Anti-foam Pump	1	1	CENTRIFUGAL	CS
T-405	Media-Prep Tank	1	0	VERTICAL-VESSEL	SS304
T-420	Anti-foam Tank	1	0	VERTICAL-VESSEL	POLYETHYLENE

VER	DESCRIPTION	DATE
A	SUBCONTRACTOR UPDATE	4/98
B	BASECASE UPDATE	9/98
C	DESIGN REPORT	2/99
D	FINAL 1999 DESIGN REPORT	6/99
		LL 6/23/99

NREL
NATIONAL RENEWABLE ENERGY LABORATORY
Biotechnology Center For Fuels And Chemicals

SECTION A400
CELLULASE PROD. FERMENTATION

R9906A.xls | PFD-P100-A402 | D

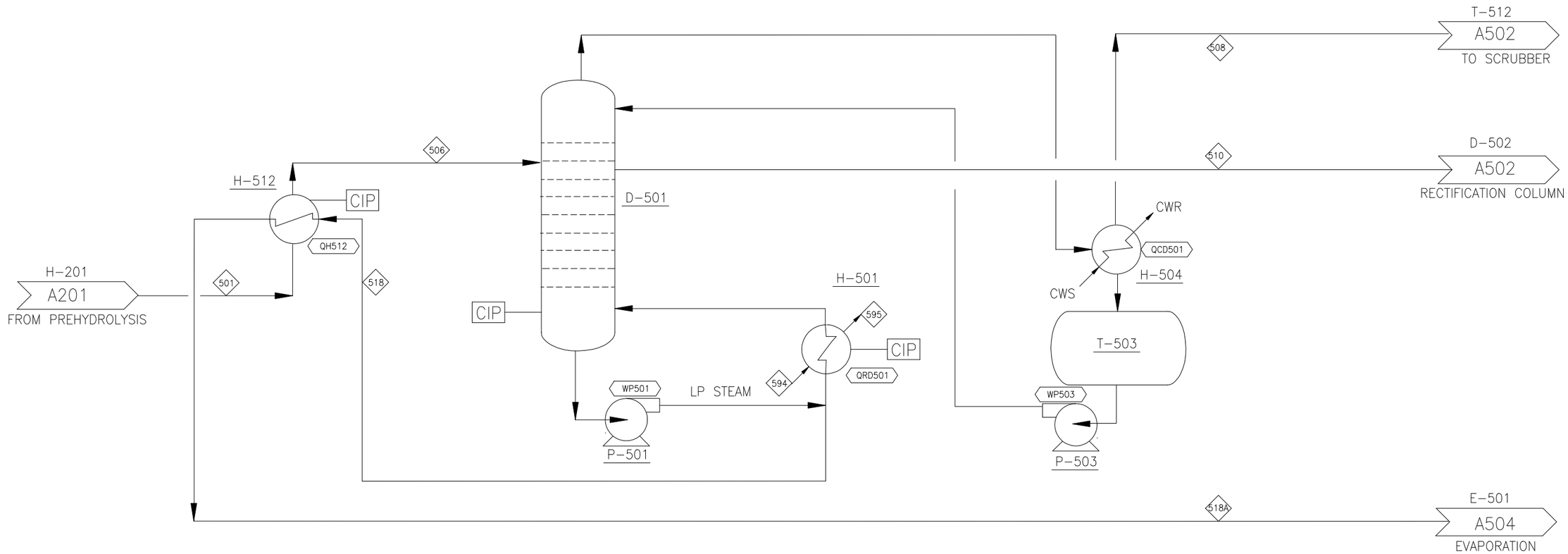

COMPONENT	UNITS	501	506	508	510	518	518A	594	595
Total Flow	kg/hr	380,209	380,209	582	49,456	330,171	330,171	54,459	54,459
Insoluble Solids	%	8.3%	8.3%	0.0%	0.0%	9.6%	9.6%	0.0%	0.0%
Soluble Solids	%	2.9%	2.9%	0.0%	0.5%	3.3%	3.3%	0.0%	0.0%
Temperature	C	95	100	60	114	122	117	164	148
Pressure	atm	4.00	4.76	1.86	1.93	2.10	2.10	4.42	4.42
Vapor Fraction		0.00	0.00	1.00	1.00	0.00	0.00	1.00	0.00
Ethanol	kg/hr	18,701	18,701	71	18,481	149	149		
Water	kg/hr	308,205	308,205	23	29,891	278,290	278,290	54,459	54,459
Glucose (SS)	kg/hr	219	219	0	0	219	219		
Xylose (SS)	kg/hr	721	721	0	0	721	721		
Arabinose (SS)	kg/hr	569	569	0	0	569	569		
Other Sugars (SS)	kg/hr	2,936	2,936	0	0	2,936	2,936		
Cellobiose (SS)	kg/hr	383	383	0	0	383	383		
Glucose Oligomers (SS)	kg/hr	3,021	3,021	0	0	3,021	3,021		
Xylose Oligomers (SS)	kg/hr	1,006	1,006	0	0	1,006	1,006		
Other Oligomers (SS)	kg/hr								
Corn Steep Liquor (SS)	kg/hr	2,327	2,327	0	227	2,100	2,100		
(NH4)2SO4 (SS)	kg/hr								
NH4Acetate (SS)	kg/hr								
Others (Soluble Solids)	kg/hr	29	29	0	0	29	29		
Acetic Acid	kg/hr	2,545	2,545	0	123	2,422	2,422		
Sulfuric Acid	kg/hr	295	295	0	0	295	295		
Furfural	kg/hr	1,010	1,010	0	524	485	485		
HMF	kg/hr	340	340	0	177	164	164		
Carbon Dioxide	kg/hr	487	487	487	0	0	0		
Methane	kg/hr								
Oxygen	kg/hr	0	0	0	0				
Nitrogen	kg/hr	0	0	0	0	0	0		
Ammonia	kg/hr	12	12	0	11	0	0		
NH4OH	kg/hr								
Others	kg/hr	5,787	5,787	0	21	5,766	5,766		
Cellulose (IS)	kg/hr	3,631	3,631			3,631	3,631		
Xylan (IS)	kg/hr	794	794			794	794		
Arabinan (IS)	kg/hr	33	33			33	33		
Other Sugar Polymers (IS)	kg/hr	164	164			164	164		
Cellulase (IS)	kg/hr	624	624			624	624		
Biomass (IS)	kg/hr	245	245			245	245		
Zymo (IS)	kg/hr	1,061	1,061			1,061	1,061		
Lignin (IS)	kg/hr	23,068	23,068			23,068	23,068		
Gypsum (IS)	kg/hr	8	8			8	8		
Ca(OH)2 (IS)	kg/hr								
Others (Insoluble Solids)	kg/hr	1,986	1,986			1,986	1,986		
Enthalpy Flow (millions)	Kcal/hr	-1295.5	-1293.6	-1.2	-117.8	-1147.5	-1149.3	-171.2	-199.3
Average Density	g/ml	0.971	0.966	0.003	0.001	0.965	0.970	0.002	0.865

Heat Stream No.	MM kcal/hr	Work Stream No.	kW
QCD501	0.89	WP501	260.94
QH512	-1.83	WP503	0.51
QRD501	-28.06		

Eq. No.	Equipment Name	Req.	Spare	Equipment Type	Mat Const.
D-501	Beer Column	1	0	DISTILLATION	SS304
H-501	Beer Column Reboiler	1	0	SHELL-TUBE	SS304;CS
H-504	Beer Column Condenser	1	0	SHELL-TUBE	SS304;CS
H-512	Beer Column Feed Interchange	1	1	PLATE-FRAME	SS
P-501	Beer Column Bottoms Pump	1	1	CENTRIFUGAL	SS
P-503	Beer Column Reflux Pump	1	1	CENTRIFUGAL	SS
T-503	Beer Column Relfux Drum	1	0	HORIZONTAL-VESSEL	SS304

VER	DESCRIPTION	DATE
A	SUBCONTRACTOR UPDATE	4/98
B	BASECASE UPDATE	9/98
C	DESIGN REPORT	2/99
D	FINAL 1999 DESIGN REPORT	6/99
		LL 6/23/99

NREL
NATIONAL RENEWABLE ENERGY LABORATORY
Biotechnology Center For Fuels And Chemicals

SECTION A500
BEER DISTILLATION

R9906A.xls | PFD-P100-A501 | D

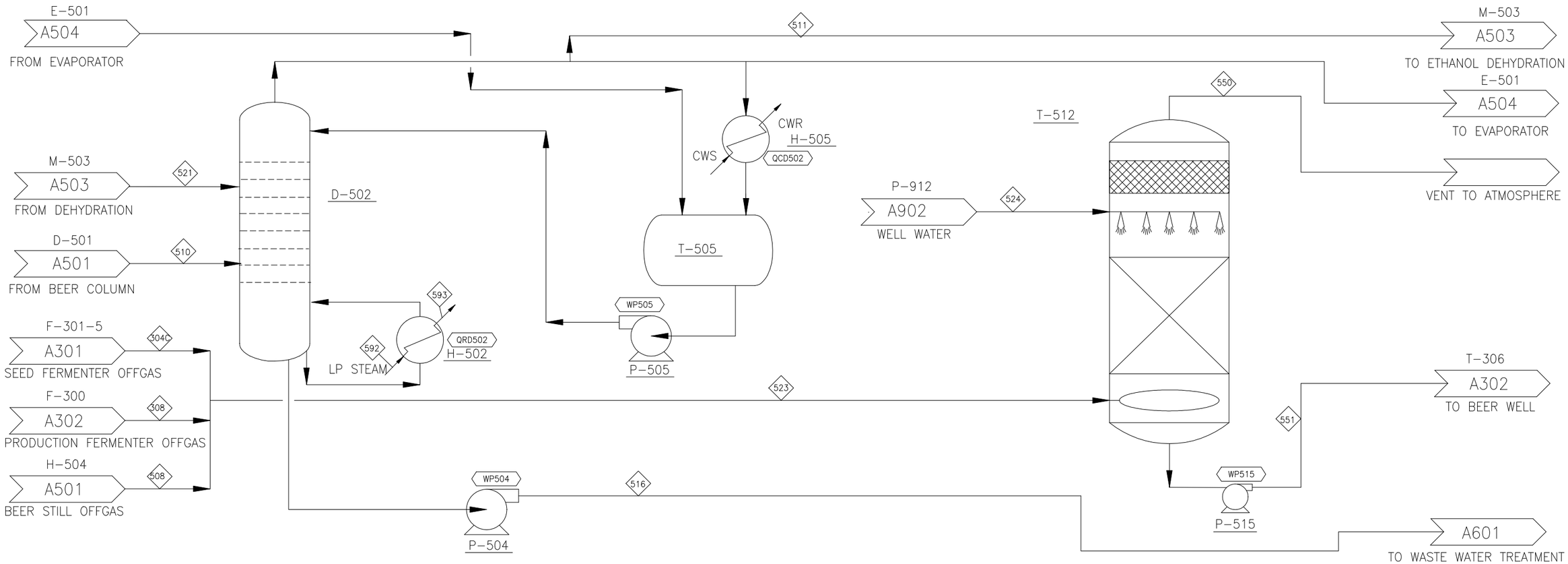

COMPONENT	UNITS	304C	308	508	510	511	516	521	523	524	550	551	592	593
Total Flow	kg/hr	876	16,978	582	49,456	24,982	30,898	6,425	18,437	13,042	17,916	13,562	6,814	6,814
Insoluble Solids	%	0.0%	0.0%	0.0%	0.0%	0.0%	0.0%	0.0%	0.0%	0.0%	0.0%	0.0%	0.0%	0.0%
Soluble Solids	%	0.0%	0.0%	0.0%	0.5%	0.0%	0.7%	0.0%	0.0%	0.0%	0.0%	0.0%	0.0%	0.0%
Temperature	C	30	30	60	114	92	121	70	31	13	18	30	164	148
Pressure	atm	1.00	1.00	1.86	1.93	1.70	2.06	1.53	1.00	1.00	0.90	0.90	4.42	4.42
Vapor Fraction		1.00	1.00	1.00	1.00	1.00	0.00	0.00	1.00	0.00	1.00	0.00	1.00	0.00
Ethanol	kg/hr	7	263	71	18,481	23,108	15	4,643	341		5	337		
Water	kg/hr	15	288	23	29,891	1,874	29,800	1,782	326	13,042	173	13,195	6,814	6,814
Glucose (SS)	kg/hr			0	0		0		0					
Xylose (SS)	kg/hr			0	0		0		0					
Arabinose (SS)	kg/hr			0	0		0		0					
Other Sugars (SS)	kg/hr			0	0		0		0					
Cellobiose (SS)	kg/hr			0	0		0		0					
Glucose Oligomers (SS)	kg/hr			0	0		0		0					
Xylose Oligomers (SS)	kg/hr			0	0		0		0					
Other Oligomers (SS)	kg/hr													
Corn Steep Liquor (SS)	kg/hr	0	2	0	227		227		3		0	3		
(NH4)2SO4 (SS)	kg/hr													
NH4Acetate (SS)	kg/hr													
Others (Soluble Solids)	kg/hr			0	0		0		0					
Acetic Acid	kg/hr	0	1	0	123		123		2		0	2		
Sulfuric Acid	kg/hr	0	0	0	0		0		0		0	0		
Furfural	kg/hr	0	6	0	524		524		7		0	7		
HMF	kg/hr	0	2	0	177		177		2		0	2		
Carbon Dioxide	kg/hr	838	16,281	487	0		0		17,605		17,589	16		
Methane	kg/hr													
Oxygen	kg/hr	15	134	0	0				149		149	0		
Nitrogen	kg/hr	0	1	0	0				1		1	0		
Ammonia	kg/hr		0	0	11		11		0		0	0		
NH4OH	kg/hr													
Others	kg/hr	0	0	0	21		21		0		0	0		
Cellulose (IS)	kg/hr													
Xylan (IS)	kg/hr													
Arabinan (IS)	kg/hr													
Other Sugar Polymers (IS)	kg/hr													
Cellulase (IS)	kg/hr													
Biomass (IS)	kg/hr													
Zymo (IS)	kg/hr													
Lignin (IS)	kg/hr													
Gypsum (IS)	kg/hr													
Ca(OH)2 (IS)	kg/hr													
Others (Insoluble Solids)	kg/hr													
Enthalpy Flow (millions)	Kcal/hr	-1.8	-36.0	-1.2	-117.8	-33.5	-111.4	-13.2	-39.1	-49.5	-38.1	-50.4	-21.4	-24.9
Average Density	g/ml	0.002	0.002	0.003	0.001	0.002	0.900	0.794	0.002	1.005	0.002	0.983	0.002	0.865

Heat Stream No.	MM kcal/hr
QCD502	17.44
QRD502	-3.51

Work Stream No.	kW
WP504	7.62
WP505	12.77
WP515	2.21

Eq. No.	Equipment Name	Req.	Spare	Equipment Type	Mat Const.
D-502	Rectification Column	1	0	DISTILLATION	SS
H-502	Rectification Column Reboiler	1	0	SHELL-TUBE	SS304;CS
H-505	Rectification Column Condenser	1	0	SHELL-TUBE	SS304;CS
P-504	Rectification Column Bottoms Pump	1	1	CENTRIFUGAL	SS
P-505	Rectification Column Reflux Pump	1	1	CENTRIFUGAL	SS
P-515	Scrubber Bottoms Pump	1	0	CENTRIFUGAL	SS
T-505	Rectification Column Reflux Drum	1	0	HORIZONTAL-VESSEL	SS304
T-512	Vent Scrubber	1	0	ABSORBER	SS304;PLASTIC

VER	DESCRIPTION	DATE
A	SUBCONTRACTOR UPDATE	4/98
B	BASECASE UPDATE	9/98
C	DESIGN REPORT	2/99
D	FINAL 1999 DESIGN REPORT	6/99
		LL 6/24/99

NREL
NATIONAL RENEWABLE ENERGY LABORATORY
Biotechnology Center For Fuels And Chemicals

SECTION A500
RECTIFICATION DISTILLATION

R9906A.xls | PFD-P100-A502 | D

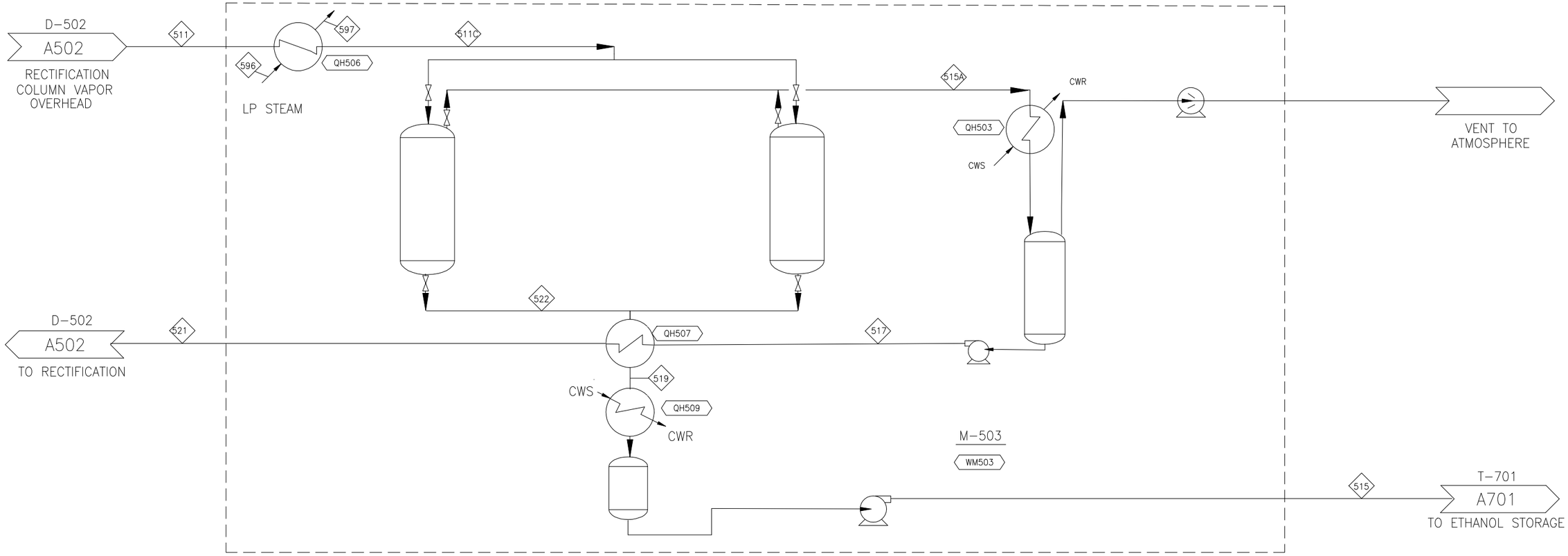

COMPONENT	UNITS	511	511C	515	515A	517	519	521	522	596	597
Total Flow	kg/hr	24,982	24,982	18,557	6,425	6,425	18,557	6,425	6,425	467	467
Insoluble Solids	%	0.0%	0.0%	0.0%	0.0%	0.0%	0.0%	0.0%	0.0%	0.0%	0.0%
Soluble Solids	%	0.0%	0.0%	0.0%	0.0%	0.0%	0.0%	0.0%	0.0%	0.0%	0.0%
Temperature	C	92	116	38	116	35	92	70	70	164	148
Pressure	atm	1.70	1.70	1.00	1.70	0.14	1.44	1.53	1.53	4.42	4.42
Vapor Fraction		1.00	1.00	0.00	1.00	0.00	1.00	0.00	0.00	1.00	0.00
Ethanol	kg/hr	23,108	23,108	18,466	4,643	4,643	18,466	4,643	4,643		
Water	kg/hr	1,874	1,874	92	1,782	1,782	92	1,782	1,782	467	467
Glucose (SS)	kg/hr										
Xylose (SS)	kg/hr										
Arabinose (SS)	kg/hr										
Other Sugars (SS)	kg/hr										
Cellobiose (SS)	kg/hr										
Glucose Oligomers (SS)	kg/hr										
Xylose Oligomers (SS)	kg/hr										
Other Oligomers (SS)	kg/hr										
Corn Steep Liquor (SS)	kg/hr										
(NH4)2SO4 (SS)	kg/hr										
NH4Acetate (SS)	kg/hr										
Others (Soluble Solids)	kg/hr										
Acetic Acid	kg/hr										
Sulfuric Acid	kg/hr										
Furfural	kg/hr										
HMF	kg/hr										
Carbon Dioxide	kg/hr										
Methane	kg/hr										
Oxygen	kg/hr										
Nitrogen	kg/hr										
Ammonia	kg/hr										
NH4OH	kg/hr										
Others	kg/hr										
Cellulose (IS)	kg/hr										
Xylan (IS)	kg/hr										
Arabinan (IS)	kg/hr										
Other Sugar Polymers (IS)	kg/hr										
Cellulase (IS)	kg/hr										
Biomass (IS)	kg/hr										
Zymo (IS)	kg/hr										
Lignin (IS)	kg/hr										
Gypsum (IS)	kg/hr										
Ca(OH)2 (IS)	kg/hr										
Others (Insoluble Solids)	kg/hr										
Enthalpy Flow (millions)	Kcal/hr	-33.5	-33.3	-26.7	-11.1	-13.4	-22.3	-13.2	-13.2	-1.5	-1.7
Average Density	g/ml	0.002	0.002	0.775	0.002	0.831	0.002	0.794	0.794	0.002	0.865

Heat Stream No.	MM kcal/hr
QH503	2.22
QH506	-0.24
QH507	0.18
QH509	4.41

Work Stream No.	kW
WM503	128.99

Eq. No.	Equipment Name	Req.	Spare	Equipment Type	Mat Const.
M-503	Molecular Sieve (9 pieces)	1	0	PACKAGE	SS

VER	DESCRIPTION	DATE
A	SUBCONTRACTOR UPDATE	4/98
B	BASECASE UPDATE	9/98
C	DESIGN REPORT	2/99
D	FINAL 1999 DESIGN REPORT	6/99
		LL 6/24/99

NREL
NATIONAL RENEWABLE ENERGY LABORATORY
Biotechnology Center For Fuels And Chemicals

SECTION A500
ETHANOL DEHYDRATION

R9906A.xls | PFD-P100-A503 | D

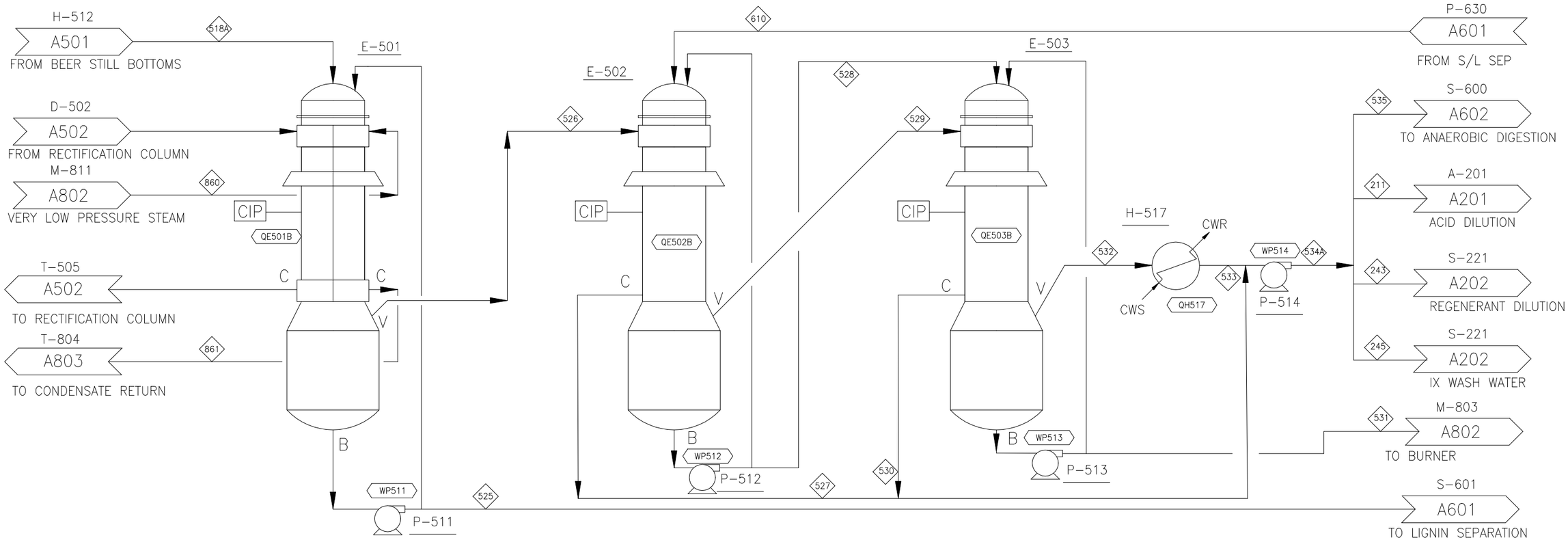

COMPONENT	UNITS	211	243	245	518A	525	526	527	528	529	530	531	532	533	534A	535	610
Total Flow	kg/hr	47,637	65,828	29,862	330,171	269,333	60,838	60,838	75,972	52,320	52,320	24,371	51,601	51,601	164,760	16,476	128,292
Insoluble Solids	%	0.0%	0.0%	0.0%	9.6%	11.7%	0.0%	0.0%	1.5%	0.0%	0.0%	4.8%	0.0%	0.0%	0.0%	0.0%	0.9%
Soluble Solids	%	0.3%	0.0%	0.3%	3.3%	3.9%	0.7%	0.7%	6.1%	0.0%	0.0%	19.1%	0.0%	0.0%	0.3%	0.3%	3.6%
Temperature	C	74	73	74	117	86	86	86	70	70	70	63	63	63	74	74	40
Pressure	atm	3.00	3.00	3.00	2.10	0.58	0.58	0.60	0.30	0.30	0.31	0.21	0.21	0.23	2.00	2.00	3.20
Vapor Fraction		0.00	0.00	0.00	0.00	0.00	1.00	0.00	0.00	1.00	0.00	0.00	1.00	0.00	0.00	0.00	0.00
Ethanol	kg/hr	38		24	149	36	114	114	2	17	17	0	2	2	133	13	19
Water	kg/hr	47,092	65,828	29,520	278,290	218,600	59,690	59,690	65,773	52,037	52,037	14,626	51,147	51,147	162,874	16,287	117,809
Glucose (SS)	kg/hr				219	219											
Xylose (SS)	kg/hr	0		0	721	721	0	0	388	0	0	388	0	0	0	0	388
Arabinose (SS)	kg/hr	0		0	569	569	0	0	307			307	0	0	0	0	307
Other Sugars (SS)	kg/hr				2,936	2,936			1,583			1,583					1,583
Cellobiose (SS)	kg/hr				383	383			207			207					207
Glucose Oligomers (SS)	kg/hr				3,021	3,021			1,628			1,628					1,628
Xylose Oligomers (SS)	kg/hr	0		0	1,006	1,006	0	0	542	0	0	542	0	0	0	0	542
Other Oligomers (SS)	kg/hr																
Corn Steep Liquor (SS)	kg/hr	130		82	2,100	1,649	450	450							450	45	
(NH4)2SO4 (SS)	kg/hr																
NH4Acetate (SS)	kg/hr																
Others (Soluble Solids)	kg/hr				29	29			11			11					11
Acetic Acid	kg/hr	205		129	2,422	2,295	127	127	1,077	159	159	653	424	424	711	71	1,237
Sulfuric Acid	kg/hr	0		0	295	295	0	0	159	0	0	159	0	0	0	0	159
Furfural	kg/hr	117		73	485	173	312	312	16	78	78	1	14	14	404	40	93
HMF	kg/hr	39		25	164	58	105	105	5	26	26	0	5	5	136	14	31
Carbon Dioxide	kg/hr				0												
Methane	kg/hr																
Oxygen	kg/hr																
Nitrogen	kg/hr				0												
Ammonia	kg/hr	0		0	0	0	0	0	0	0	0	0	0	0	0	0	0
NH4OH	kg/hr																
Others	kg/hr	15		9	5,766	5,726	40	40	3,105	3	3	3,096	9	9	52	5	3,108
Cellulose (IS)	kg/hr				3,631	3,631			54			54					54
Xylan (IS)	kg/hr				794	794			12			12					12
Arabinan (IS)	kg/hr				33	33			0			0					0
Other Sugar Polymers (IS)	kg/hr				164	164			2			2					2
Cellulase (IS)	kg/hr				624	624			234			234					234
Biomass (IS)	kg/hr				245	245			92			92					92
Zymo (IS)	kg/hr				1,061	1,061			398			398					398
Lignin (IS)	kg/hr				23,068	23,068			346			346					346
Gypsum (IS)	kg/hr				8	8			0			0					0
Ca(OH)2 (IS)	kg/hr																
Others (Insoluble Solids)	kg/hr				1,986	1,986			30			30					30
Enthalpy Flow (millions)	Kcal/hr	-177.2	-246.3	-111.1	-1149.3	-935.3	-192.0	-224.9	-264.0	-166.2	-195.2	-71.7	-163.9	-192.6	-612.8	-61.3	-462.5
Average Density	g/ml	0.945	0.945	0.945	0.970	1.021	0.000	0.934	0.992	0.000	0.949	1.094	0.000	0.955	0.945	0.945	1.000

Stream No.	MM kcal/hr	Stream No.	kW
QE501B	22.03	WP511	173.06
QE502B	32.29	WP512	35.69
QE503B	28.39	WP513	14.36
QH517	28.70	WP514	27.93

Eq. No.	Equipment Name	Req.	Spare	Equipment Type	Mat Const.
E-501	1st Effect Evaporation	2	0	SHELL-TUBE	SS316
E-502	2nd Effect Evaporation	1	0	SHELL-TUBE	SS316
E-503	3rd Effect Evaporation	2	0	SHELL-TUBE	SS316
H-517	Evaporator Condenser	1	1	SHELL-TUBE	SS304;CS
P-511	1st Effect Pump	2	1	CENTRIFUGAL	SS
P-512	2nd Effect Pump	1	1	CENTRIFUGAL	SS
P-513	3rd Effect Pump	2	1	CENTRIFUGAL	SS
P-514	Evaporator Condensate Pump	1	1	CENTRIFUGAL	SS304

VER	DESCRIPTION	DATE
A	SUBCONTRACTOR UPDATE	4/98
B	BASECASE UPDATE	9/98
C	DESIGN REPORT	2/99
D	FINAL 1999 DESIGN REPORT	6/99
		LL 6/24/99

NATIONAL RENEWABLE ENERGY LABORATORY
Biotechnology Center For Fuels And Chemicals

SECTION A500
EVAPORATOR

R9906A.xls | PFD-P100-A504 | D

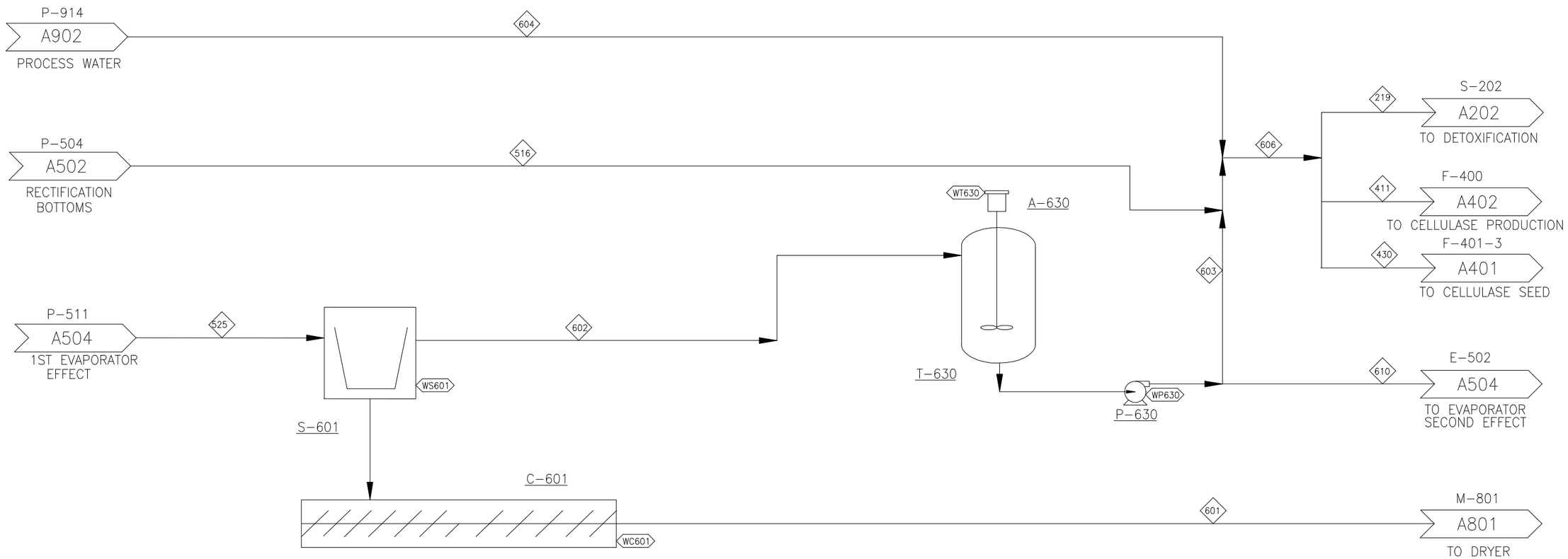

COMPONENT	UNITS	219	411	430	516	525	601	602	603	604	606	610
Total Flow	kg/hr	131,896	22,784	2,147	30,898	269,333	98,277	171,056	42,764	83,163	156,827	128,292
Insoluble Solids	%	0.2%	0.2%	0.2%	0.0%	11.7%	30.6%	0.9%	0.9%	0.0%	0.2%	0.9%
Soluble Solids	%	1.1%	1.1%	1.1%	0.7%	3.9%	4.4%	3.6%	3.6%	0.0%	1.1%	3.6%
Temperature	C	47	47	47	121	86	40	40	40	20	47	40
Pressure	atm	1.00	1.00	1.00	2.06	0.58	3.20	3.20	3.20	1.00	1.00	3.20
Vapor Fraction		0.00	0.00	0.00	0.00	0.00	0.00	0.00	0.00	0.00	0.00	0.00
Ethanol	kg/hr	18	3	0	15	36	10	26	6		22	19
Water	kg/hr	128,033	22,117	2,084	29,800	218,600	61,520	157,079	39,270	83,163	152,234	117,809
Glucose (SS)	kg/hr	0	0	0	0	219	219				0	
Xylose (SS)	kg/hr	109	19	2	0	721	203	518	129		129	388
Arabinose (SS)	kg/hr	86	15	1	0	569	160	409	102		102	307
Other Sugars (SS)	kg/hr	444	77	7	0	2,936	826	2,110	528		528	1,583
Cellobiose (SS)	kg/hr	58	10	1	0	383	108	275	69		69	207
Glucose Oligomers (SS)	kg/hr	456	79	7	0	3,021	850	2,171	543		543	1,628
Xylose Oligomers (SS)	kg/hr	152	26	2	0	1,006	283	723	181		181	542
Other Oligomers (SS)	kg/hr											
Corn Steep Liquor (SS)	kg/hr	191	33	3	227	1,649	1,649				227	
(NH4)2SO4 (SS)	kg/hr											
NH4Acetate (SS)	kg/hr											
Others (Soluble Solids)	kg/hr	3	1	0	0	29	14	14	4		4	11
Acetic Acid	kg/hr	450	78	7	123	2,295	646	1,649	412		535	1,237
Sulfuric Acid	kg/hr	45	8	1	0	295	83	212	53		53	159
Furfural	kg/hr	467	81	8	524	173	49	125	31		556	93
HMF	kg/hr	157	27	3	177	58	16	42	10		187	31
Carbon Dioxide	kg/hr	0	0	0	0						0	
Methane	kg/hr											
Oxygen	kg/hr											
Nitrogen	kg/hr											
Ammonia	kg/hr	10	2	0	11	0	0	0	0		11	0
NH4OH	kg/hr											
Others	kg/hr	889	154	14	21	5,726	1,582	4,144	1,036		1,057	3,108
Cellulose (IS)	kg/hr	15	3	0		3,631	3,559	73	18		18	54
Xylan (IS)	kg/hr	3	1	0		794	778	16	4		4	12
Arabinan (IS)	kg/hr	0	0	0		33	32	1	0		0	0
Other Sugar Polymers (IS)	kg/hr	1	0	0		164	161	3	1		1	2
Cellulase (IS)	kg/hr	66	11	1		624	312	312	78		78	234
Biomass (IS)	kg/hr	26	4	0		245	123	123	31		31	92
Zymo (IS)	kg/hr	112	19	2		1,061	531	531	133		133	398
Lignin (IS)	kg/hr	97	17	2		23,068	22,607	461	115		115	346
Gypsum (IS)	kg/hr	0	0	0		8	8	0	0		0	0
Ca(OH)2 (IS)	kg/hr											
Others (Insoluble Solids)	kg/hr	8	1	0		1,986	1,946	40	10		10	30
Enthalpy Flow (millions)	Kcal/hr	-488.6	-84.4	-8.0	-111.4	-935.3	-328.5	-616.7	-154.2	-315.4	-581.0	-462.5
Average Density	g/ml	0.979	0.979	0.979	0.900	1.021	1.158	1.000	1.000	0.998	0.979	1.000

Heat Stream No.	MM kcal/hr

Work Stream No.	kW
WC601	62.80
WP630	39.16
WS601	958.86
WT630	4.50

Eq. No.	Equipment Name	Req.	Spare	Equipment Type	Mat Const.
A-630	Recycled Water Tank Agitator	1	0	FIXED-PROP	CS
C-601	Lignin Wet Cake Screw	1	0	SCREW	CS
P-630	Recycled Water Pump	1	1	CENTRIFUGAL	CS
S-601	Beer Column Bottoms Centrifuge	3	0	CENTRIFUGE	316SS
T-630	Recycled Water Tank	1	0	FLAT-BTM-STORAGE	CS

VER	DESCRIPTION	DATE
A	SUBCONTRACTOR UPDATE	4/98
B	BASECASE UPDATE	9/98
C	WWT UPDATE	11/98
D	DESIGN REPORT	2/99
E	FINAL 1999 DESIGN REPORT	6/99
		LL 6/24/99

NREL NATIONAL RENEWABLE ENERGY LABORATORY
Biotechnology Center For Fuels And Chemicals

SECTION A600
LIGNIN SEPARATION & RECYCLE

R9906A.xls | PFD-P100-A601 | E

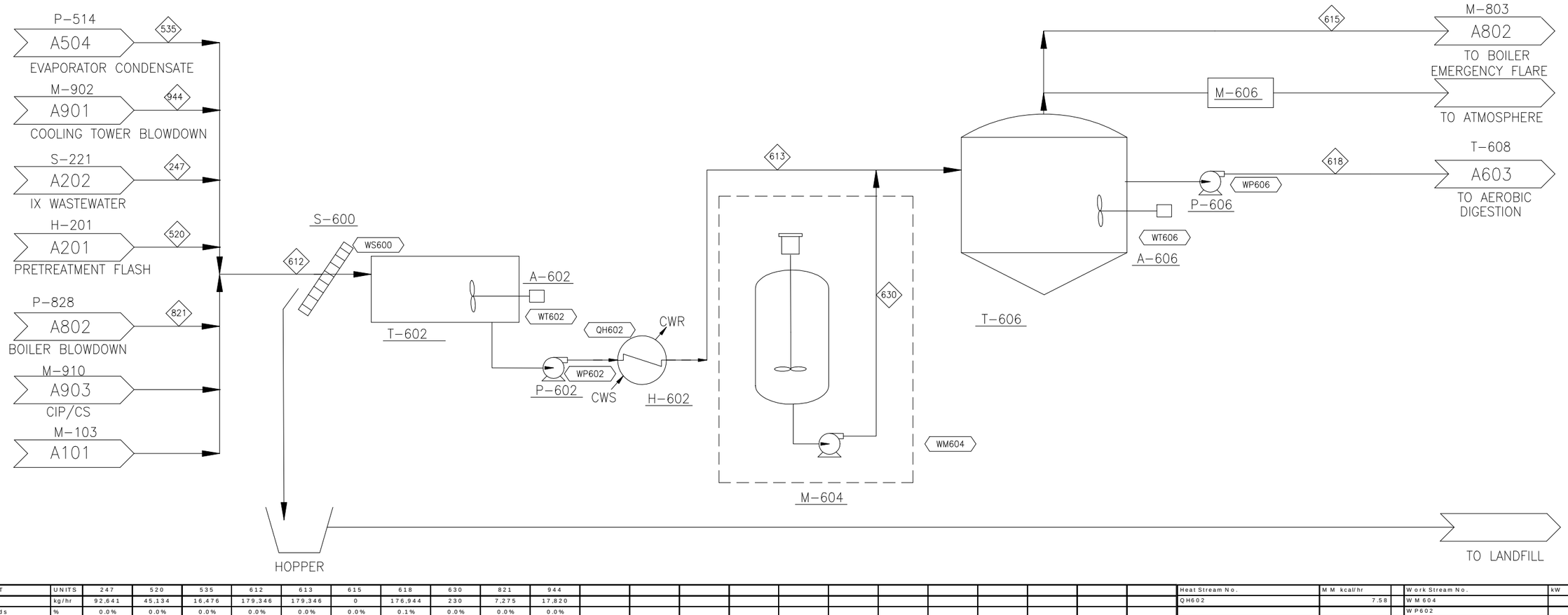

COMPONENT	UNITS	247	520	535	612	613	615	618	630	821	944
Total Flow	kg/hr	92,641	45,134	16,476	179,346	179,346	0	176,944	230	7,275	17,820
Insoluble Solids	%	0.0%	0.0%	0.0%	0.0%	0.0%	0.0%	0.1%	0.0%	0.0%	0.0%
Soluble Solids	%	4.9%	0.1%	0.3%	2.6%	2.6%	0.0%	0.2%	0.0%	0.0%	0.0%
Temperature	C	40	100	74	79	35		35	20	309	28
Pressure	atm	3.00	1.00	2.00	2.00	2.00		1.00	1.00	96.26	1.00
Vapor Fraction		0.00	0.07	0.00	0.00	0.00	0.00	0.00	0.00	0.00	0.00
Ethanol	kg/hr		29	13	42	42		3			
Water	kg/hr	87,893	43,822	16,287	173,098	173,098		175,675		7,275	17,820
Glucose (SS)	kg/hr										
Xylose (SS)	kg/hr		0	0	0	0		0			
Arabinose (SS)	kg/hr		0	0	0	0					
Other Sugars (SS)	kg/hr										
Cellobiose (SS)	kg/hr										
Glucose Oligomers (SS)	kg/hr										
Xylose Oligomers (SS)	kg/hr		0	0	0	0					
Other Oligomers (SS)	kg/hr										
Corn Steep Liquor (SS)	kg/hr		31	45	76	76		76			
(NH4)2SO4 (SS)	kg/hr	915			915	915					
NH4Acetate (SS)	kg/hr	3,606			3,606	3,606		252			
Others (Soluble Solids)	kg/hr										
Acetic Acid	kg/hr		265	71	336	336		24			
Sulfuric Acid	kg/hr		0	0	0	0					
Furfural	kg/hr		736	40	777	777		54			
HMF	kg/hr		248	14	262	262		18			
Carbon Dioxide	kg/hr							46			
Methane	kg/hr							2			
Oxygen	kg/hr										
Nitrogen	kg/hr										
Ammonia	kg/hr	7	0	0	7	7		7			
NH4OH	kg/hr	219			219	219		189			
Others	kg/hr		3	5	8	8		429	230		
Cellulose (IS)	kg/hr										
Xylan (IS)	kg/hr										
Arabinan (IS)	kg/hr										
Other Sugar Polymers (IS)	kg/hr										
Cellulase (IS)	kg/hr										
Biomass (IS)	kg/hr							169			
Zymo (IS)	kg/hr										
Lignin (IS)	kg/hr										
Gypsum (IS)	kg/hr										
Ca(OH)2 (IS)	kg/hr										
Others (Insoluble Solids)	kg/hr										
Enthalpy Flow (millions)	Kcal/hr	-347.3	-162.2	-61.3	-663.5	-671.1		-666.4	-0.9	-25.3	-67.4
Average Density	g/ml	0.914	0.009	0.945	0.910	0.950		0.982	0.998	0.693	0.991

Heat Stream No.	MM kcal/hr
QH602	7.58

Work Stream No.	kW
WM604	7.64
WP602	43.15
WP606	41.17
WS600	0.77
WT602	25.56
WT606	123.43

Eq. No.	Equipment Name	Req.	Spare	Equipment Type	Mat Const.
A-602	Equalization Basin Agitator	1	0	FIXED-PROP	SS
A-606	Anaerobic Agitator	4	0	FIXED-PROP	SS
H-602	Anaerobic Digestor Feed Cooler	1	0	SHELL-TUBE	SS316;CS
M-604	Nutrient Feed System	1	0	PACKAGE	CS
M-606	Biogas Emergency Flare	1	0	MISCELLANEOUS	SS
P-602	Anaerobic Reactor Feed Pump	1	1	CENTRIFUGAL	CS
P-606	Aerobic Digestor Feed Pump	1	1	CENTRIFUGAL	CS
S-600	Bar Screen	1	0	SCREEN	CS
T-602	Equalization Basin	1	0	FLAT-BTM-STORAGE	CONCRETE
T-606	Anaerobic Digestor	4	0	FLAT-BTM-STORAGE	EPOXY-LINED

VER	DESCRIPTION	DATE
A	SUBCONTRACTOR UPDATE	4/98
B	BASECASE UPDATE	9/98
C	WWT UPDATE	11/98
D	DESIGN REPORT	2/99
E	FINAL 1999 DESIGN REPORT	6/99
		LL 6/24/99

NREL
NATIONAL RENEWABLE ENERGY LABORATORY
Biotechnology Center For Fuels And Chemicals

SECTION A600
ANAEROBIC DIGESTION

R9906A.xls | PFD-P100-A602 | E

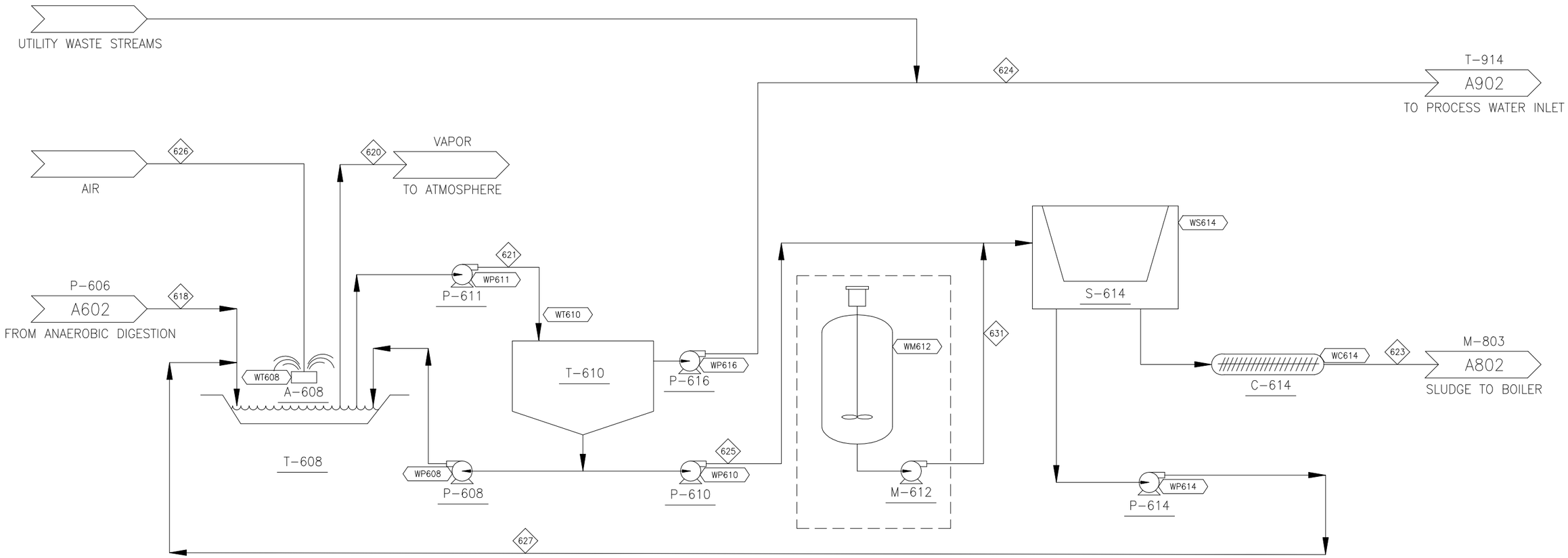

COMPONENT	UNITS	618	620	621	623	624	625	626	627	631
Total Flow	kg/hr	176,944	156,028	178,667	918	173,154	5,513	153,155	4,596	1
Insoluble Solids	%	0.1%	0.0%	0.2%	29.9%	0.0%	5.0%	0.0%	0.0%	0.0%
Soluble Solids	%	0.2%	0.0%	0.1%	0.0%	0.1%	0.1%	0.0%	0.1%	0.0%
Temperature	C	35	21	21	21	21	21	20	21	20
Pressure	atm	1.00	1.00	1.00	1.00	1.00	1.00	1.00	1.00	1.00
Vapor Fraction		0.00	1.00	0.00	0.00	0.00	0.00	1.00	0.00	0.00
Ethanol	kg/hr	3	0	0	0	0	0		0	
Water	kg/hr	175,675	2,430	177,981	641	172,755	5,226		4,584	
Glucose (SS)	kg/hr									
Xylose (SS)	kg/hr	0								
Arabinose (SS)	kg/hr									
Other Sugars (SS)	kg/hr									
Cellobiose (SS)	kg/hr									
Glucose Oligomers (SS)	kg/hr									
Xylose Oligomers (SS)	kg/hr									
Other Oligomers (SS)	kg/hr									
Corn Steep Liquor (SS)	kg/hr	76	1	77	0	75	2		2	
(NH4)2SO4 (SS)	kg/hr									
NH4Acetate (SS)	kg/hr	252		25	0	25	1		1	
Others (Soluble Solids)	kg/hr									
Acetic Acid	kg/hr	24	0	2	0	2	0		0	
Sulfuric Acid	kg/hr									
Furfural	kg/hr	54	1	5	0	4	0		0	
HMF	kg/hr	18	0	2	0	1	0		0	
Carbon Dioxide	kg/hr	46	341	0	0	0	0		0	
Methane	kg/hr	2	2	0	0	0	0		0	
Oxygen	kg/hr		31,898	1	0	1	0	32,162	0	
Nitrogen	kg/hr		121,017	3	0	3	0	120,992	0	
Ammonia	kg/hr	7	1	6	0	5	0		0	
NH4OH	kg/hr	189	157	33	0	32	1		1	
Others	kg/hr	429	179	257	1	250	8		7	1
Cellulose (IS)	kg/hr									
Xylan (IS)	kg/hr									
Arabinan (IS)	kg/hr									
Other Sugar Polymers (IS)	kg/hr									
Cellulase (IS)	kg/hr									
Biomass (IS)	kg/hr	169		275	275		275			
Zymo (IS)	kg/hr									
Lignin (IS)	kg/hr									
Gypsum (IS)	kg/hr									
Ca(OH)2 (IS)	kg/hr									
Others (Insoluble Solids)	kg/hr									
Enthalpy Flow (millions)	Kcal/hr	-666.4	-8.8	-676.4	-2.7	-656.2	-20.1	-0.2	-17.4	0.0
Average Density	g/ml	0.982	0.001	0.998	1.148	0.997	1.022	0.001	0.997	0.998

Heat Stream No.	MM kcal/hr

Work Stream No.	kW
WC614	5.25
WM612	3.83
WP608	1.24
WP610	0.73
WP611	40.92
WP614	1.05
WP616	39.68
WS614	21.31
WT608	619.00
WT610	3.82

Eq. No.	Equipment Name	Req.	Spare	Equipment Type	Mat Const.
A-608	Aerobic Lagoon Agitators	16	0	SURFACE-AERATOR	CS
C-614	Aerobic Sludge Screw	1	0	SCREW	CS
M-612	Filter Precoat System	1	0	MISCELLANEOUS	CS
P-608	Aerobic Sludge Recycle Pump	1	0	SLURRY	SS316
P-610	Aerobic Sludge Pump	1	0	SLURRY	SS316
P-611	Aerobic Digestion Outlet Pump	1	1	CENTRIFUGAL	CS
P-614	Sludge Filtrate Recycle Pump	1	1	CENTRIFUGAL	CS
P-616	Treated Water Pump	1	1	CENTRIFUGAL	CS
S-614	Belt Filter Press	1	0	FILTER-PRESS	304SS;BUNA N
T-608	Aerobic Digestor	1	0	LINED-PIT	POLYMER LINED
T-610	Clarifier	1	0	CLARIFIER	CONCRETE

VER	DESCRIPTION	DATE
A	SUBCONTRACTOR UPDATE	4/98
B	BASECASE UPDATE	9/98
C	WWT UPDATE	11/98
D	DESIGN REPORT	2/99
E	FINAL 1999 DESIGN REPORT	6/99
		LL 6/24/99

NREL
NATIONAL RENEWABLE ENERGY LABORATORY
Biotechnology Center For Fuels And Chemicals

SECTION A600
AEROBIC DIGESTION

R9906A.xls | PFD-P100-A603 | E

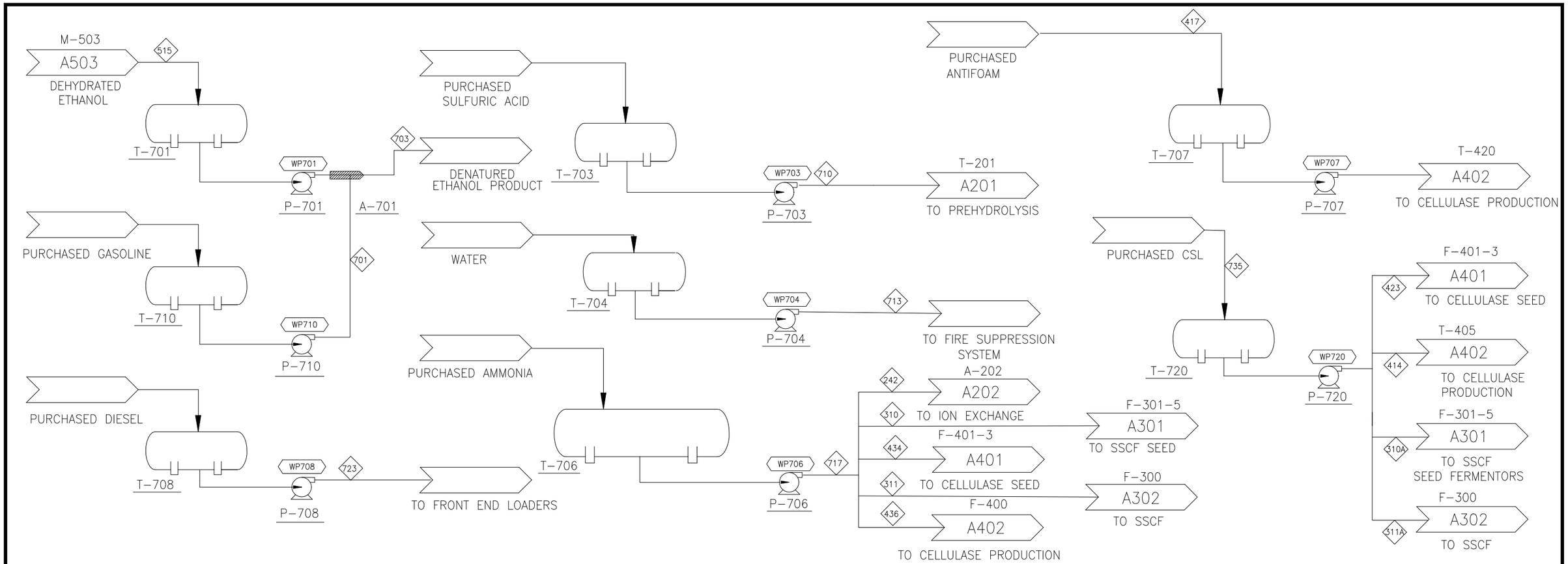

COMPONENT	UNITS	242	310	310A	311	311A	414	417	423	434	436	515	701	703	710	713	717	723	735
Total Flow	kg/hr	1,128	8	584	129	960	406	227	30	8	157	18,565	888	19,452	1,868	6,828	1,408	443	1,979
Insoluble Solids	%	0.0%	0.0%	0.0%	0.0%	0.0%	0.0%	0.0%	0.0%	0.0%	0.0%	0.0%	0.0%	0.0%	0.0%	0.0%	0.0%	0.0%	0.0%
Soluble Solids	%	0.0%	0.0%	100.0%	0.0%	100.0%	100.0%	0.0%	100.0%	0.0%	0.0%	0.0%	0.0%	0.0%	0.0%	0.0%	0.0%	0.0%	100.0%
Temperature	C	20	35	35	35	35	28	28	28	28	28	38	20	37	20	20	20	20	20
Pressure	atm	17.00	1.00	1.00	1.00	1.00	1.00	1.00	1.00	1.00	1.00	1.00	1.00	1.00	1.00	1.00	17.00	1.00	1.00
Vapor Fraction		0.00	1.00	0.00	1.00	0.00	0.00	0.00	0.00	1.00	1.00	0.00	0.00	0.00	0.00	0.00	0.00	0.00	0.00
Ethanol	kg/hr											18,473		18,473					
Water	kg/hr											92		92		6,828			
Glucose (SS)	kg/hr																		
Xylose (SS)	kg/hr																		
Arabinose (SS)	kg/hr																		
Other Sugars (SS)	kg/hr																		
Cellobiose (SS)	kg/hr																		
Glucose Oligomers (SS)	kg/hr																		
Xylose Oligomers (SS)	kg/hr																		
Other Oligomers (SS)	kg/hr																		
Corn Steep Liquor (SS)	kg/hr			584		960	406		30										1,979
(NH4)2SO4 (SS)	kg/hr																		
NH4Acetate (SS)	kg/hr																		
Others (Soluble Solids)	kg/hr																		
Acetic Acid	kg/hr																		
Sulfuric Acid	kg/hr														1,868				
Furfural	kg/hr																		
HMF	kg/hr																		
Carbon Dioxide	kg/hr																		
Methane	kg/hr																		
Oxygen	kg/hr																		
Nitrogen	kg/hr																		
Ammonia	kg/hr	1,128	8		129					8	145						1,408		
NH4OH	kg/hr																		
Others	kg/hr							227		0	12		888	888				443	
Cellulose (IS)	kg/hr																		
Xylan (IS)	kg/hr																		
Arabinan (IS)	kg/hr																		
Other Sugar Polymers (IS)	kg/hr																		
Cellulase (IS)	kg/hr																		
Biomass (IS)	kg/hr																		
Zymo (IS)	kg/hr																		
Lignin (IS)	kg/hr																		
Gypsum (IS)	kg/hr																		
Ca(OH)2 (IS)	kg/hr																		
Others (Insoluble Solids)	kg/hr																		
Enthalpy Flow (millions)	Kcal/hr	-1.0	0.0	-2.2	-0.1	-3.6	-1.5	-0.1	-0.1	0.0	-0.1	-26.8	-0.5	-27.2	-3.6	-25.9	-1.3	-0.2	-7.5
Average Density	g/ml	0.610	0.001	0.984	0.001	0.984	0.991	0.888	0.991	0.001	0.001	0.757	0.688	0.753	3.102	0.998	0.610	0.688	0.998

Heat Stream	Mmkcal/hr

Work Stream No.	kW
WP701	3.94
WP703	0.13
WP704	0.00
WP706	0.08
WP707	0.03
WP708	0.11
WP710	0.37
WP720	0.43

Eq. No.	Equipment Name	Req.	Spare	Equipment Type	Mat Const.
A-701	Denaturant In-line Mixer	1	0	STATIC	SS304
P-701	Ethanol Product Pump	2	1	CENTRIFUGAL	CS
P-703	Sulfuric Acid Pump	1	1	CENTRIFUGAL	SS316
P-704	Firewater Pump	1	1	CENTRIFUGAL	CS
P-706	Ammonia Pump	1	1	CENTRIFUGAL	CS
P-707	Antifoam Store Pump	1	1	CENTRIFUGAL	CS
P-708	Diesel Pump	1	1	CENTRIFUGAL	CS
P-710	Gasoline Pump	1	1	CENTRIFUGAL	CS
P-720	CSL Pump	1	1	CENTRIFUGAL	CS
T-701	Ethanol Product Storage Tank	2	0	FLAT-BTM-STORAGE	A285C
T-703	Sulfuric Acid Storage Tank	1	0	FLAT-BTM-STORAGE	SS316
T-704	Firewater Storage Tank	1	0	FLAT-BTM-STORAGE	A285C
T-706	Ammonia Storage Tank	1	0	HORIZONTAL-STORAGE	A515
T-707	Antifoam Storage Tank	1	0	FLAT-BTM-STORAGE	A285C
T-708	Diesel Storage Tank	1	0	FLAT-BTM-STORAGE	A285C
T-710	Gasoline Storage Tank	1	0	FLAT-BTM-STORAGE	A285C
T-720	CSL Storage Tank	1	0	FLAT-BTM-STORAGE	SS304

VER	DESCRIPTION	DATE
A	SUBCONTRACTOR UPDATE	4/98
B	BASECASE UPDATE	9/98
C	DESIGN REPORT	2/99
D	FINAL 1999 DESIGN REPORT	6/99
		LL 6/24/99

NATIONAL RENEWABLE ENERGY LABORATORY
Biotechnology Center For Fuels And Chemicals

SECTION A700
STORAGE

R9906A.xls

PFD-P100-A701 D

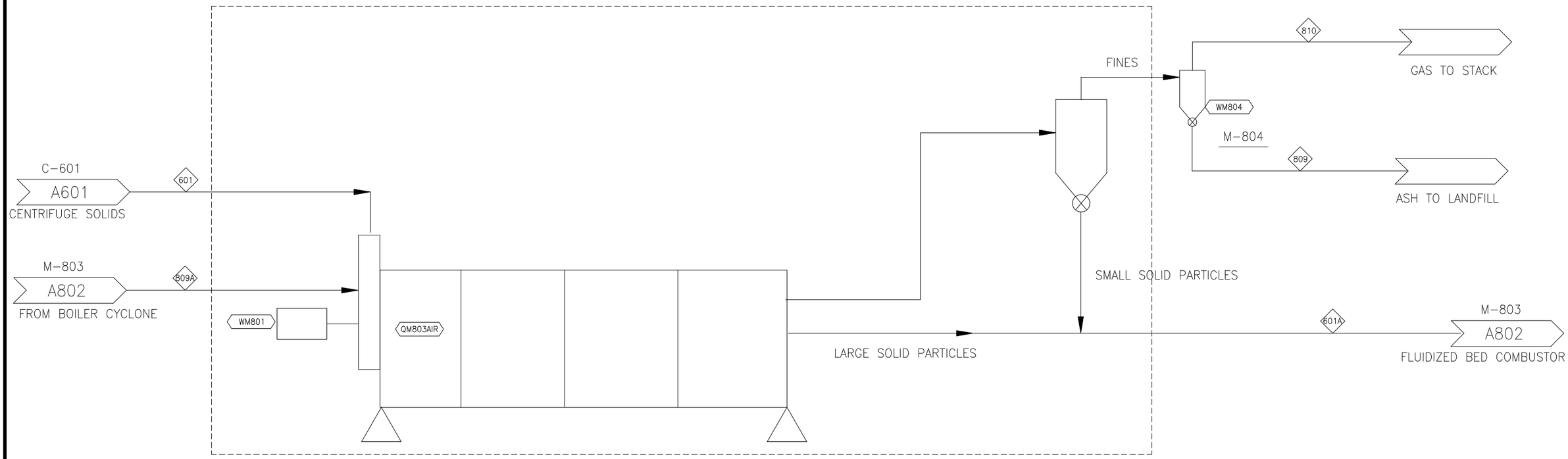

COMPONENT	UNITS	601	601A	809	809A	810
Total Flow	kg/hr	98,277	73,669	1,106	597,905	596,800
Insoluble Solids	%	30.6%	40.8%	100.0%	0.2%	0.0%
Soluble Solids	%	4.4%	5.0%	0.0%	0.3%	0.3%
Temperature	C	40	101		167	167
Pressure	atm	3.20	1.00		0.97	0.97
Vapor Fraction		0.00	0.00	0.00	1.00	1.00
Ethanol	kg/hr	10	1		9	9
Water	kg/hr	61,520	37,744		121,379	121,379
Glucose (SS)	kg/hr	219	219		2	2
Xylose (SS)	kg/hr	203	203		6	6
Arabinose (SS)	kg/hr	160	160		5	5
Other Sugars (SS)	kg/hr	826	826		24	24
Cellobiose (SS)	kg/hr	108	108		3	3
Glucose Oligomers (SS)	kg/hr	850	850		25	25
Xylose Oligomers (SS)	kg/hr	283	283		8	8
Other Oligomers (SS)	kg/hr					
Corn Steep Liquor (SS)	kg/hr	1,649	1,012		1,650	1,650
(NH4)2SO4 (SS)	kg/hr					
NH4Acetate (SS)	kg/hr				0	0
Others (Soluble Solids)	kg/hr	14	14		0	0
Acetic Acid	kg/hr	646	567		91	91
Sulfuric Acid	kg/hr	83	83		4	4
Furfural	kg/hr	49	11		38	38
HMF	kg/hr	16	4		13	13
Carbon Dioxide	kg/hr				96,814	96,814
Methane	kg/hr				13	13
Oxygen	kg/hr				17,956	17,956
Nitrogen	kg/hr				358,079	358,079
Ammonia	kg/hr	0	0		0	0
NH4OH	kg/hr				30	30
Others	kg/hr	1,582	1,527		638	638
Cellulose (IS)	kg/hr	3,559	3,559	36	36	0
Xylan (IS)	kg/hr	778	778	8	8	0
Arabinan (IS)	kg/hr	32	32	0	0	0
Other Sugar Polymers (IS)	kg/hr	161	161	2	2	0
Cellulase (IS)	kg/hr	312	312	5	5	0
Biomass (IS)	kg/hr	123	123	5	5	0
Zymo (IS)	kg/hr	531	531	9	9	0
Lignin (IS)	kg/hr	22,607	22,607	227	230	3
Gypsum (IS)	kg/hr	8	8	8	8	0
Ca(OH)2 (IS)	kg/hr					
Others (Insoluble Solids)	kg/hr	1,946	1,946	806	816	10
Enthalpy Flow (millions)	Kcal/hr	-328.5	-233.1	-2.9	-581.3	-578.3
Average Density	g/ml	1.158	1.186	2.480	0.005	0.001

Heat Stream No.	MM kcal/hr
QM803AIR	17.49

Work Stream No.	kW
WM801	1421.83
WM804	176.00

Eq. No.	Equipment Name	Req.	Spare	Equipment Type	Mat Const.
M-801	Solid Feed Rotary Dryer	1	0	MISCELLANEOUS	
M-804	Combustion Gas Baghouse	1	0	FABRIC-FILTER	A285C;FABRIC

	SCALE	DATE
A	SUBCONTRACTOR UPDATE	4/98
B	DESIGN REPORT	4/99
D	FINAL 1999 DESIGN REPORT	6/99
		LL-6/24/99

NREL
NATIONAL RENEWABLE ENERGY LABORATORY
Biotechnical Center For Fuels And Chemicals

SECTION A800
BOILER FEED DRYING

R9906A.xls | PFD-P100-A801 | D

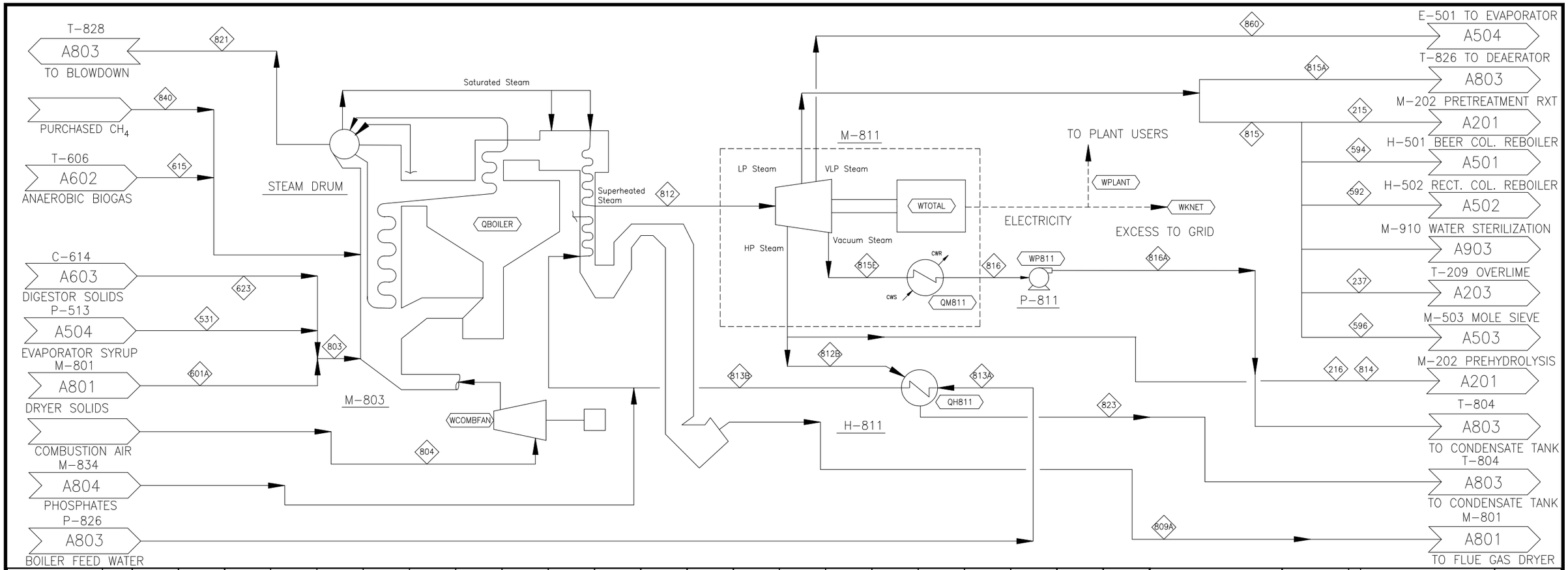

COMPONENT	UNITS	531	601A	615	623	803	804	809A	812	812A	812B	813A	813B	814	815	815A	815C	816	816A	821	823	840	860
Total Flow	kg/hr	24,371	73,669	2,632	918	98,957	471,708	597,905	235,213	235,213	18,164	242,501	242,501	44,596	81,200	25,921	65,332	55,510	55,510	7,275	18,164	0	9,823
Insoluble Solids	%	4.8%	40.8%	0.0%	29.9%	31.8%	0.0%	0.2%	0.0%	0.0%	0.0%	0.0%	0.0%	0.0%	0.0%	0.0%	0.0%	0.0%	0.0%	0.0%	0.0%	0.0%	0.0%
Soluble Solids	%	19.1%	5.0%	0.0%	0.0%	8.4%	0.0%	0.3%	0.0%	0.0%	0.0%	0.0%	0.0%	0.0%	0.0%	0.0%	0.0%	0.0%	0.0%	0.0%	0.0%	0.0%	0.0%
Temperature	C	63	101	35	21	86	24	167	510	268	268	139	177	268	164	164	115	46	46	309	190	25	115
Pressure	atm	0.21	1.00	1.00	1.00	1.00	1.00	0.97	86.06	13.00	13.00	98.31	97.63	13.00	4.42	4.42	1.68	0.10	4.20	96.26	12.32	1.00	1.68
Vapor Fraction		0.00	0.00	1.00	0.00	0.00	1.00	1.00	1.00	1.00	1.00	0.00	0.00	1.00	1.00	1.00	0.97	0.00	0.00	0.00	0.00	1.00	0.97
Ethanol	kg/hr	0	1	0	0	1		9															
Water	kg/hr	14,626	37,744	115	641	53,011	6,132	121,379	235,213	235,213	18,164	242,501	242,501	44,596	81,200	25,921	65,332	55,510	55,510	7,275	18,164		9,823
Glucose (SS)	kg/hr		219			219		2															
Xylose (SS)	kg/hr	388	203			591		6															
Arabinose (SS)	kg/hr	307	160			467		5															
Other Sugars (SS)	kg/hr	1,583	826			2,409		24															
Cellobiose (SS)	kg/hr	207	108			314		3															
Glucose Oligomers (SS)	kg/hr	1,628	850			2,479		25															
Xylose Oligomers (SS)	kg/hr	542	283			825		8															
Other Oligomers (SS)	kg/hr																						
Corn Steep Liquor (SS)	kg/hr		1,012	0	0	1,012		1,650															
(NH4)2SO4 (SS)	kg/hr																						
NH4Acetate (SS)	kg/hr				0	0		0															
Others (Soluble Solids)	kg/hr	11	14			25		0															
Acetic Acid	kg/hr	653	567	0	0	1,220		91															
Sulfuric Acid	kg/hr	159	83			242		4															
Furfural	kg/hr	1	11	0	0	12		38															
HMF	kg/hr	0	4	0	0	4		13															
Carbon Dioxide	kg/hr			1,137	0	0		96,814															
Methane	kg/hr			1,292	0	0		13														0	
Oxygen	kg/hr				0	0	107,738	17,956															
Nitrogen	kg/hr				0	0	357,838	358,079															
Ammonia	kg/hr	0	0	0	0	0		0															
NH4OH	kg/hr			30	0	0		30															
Others	kg/hr	3,096	1,527	57	1	4,624		638															
Cellulose (IS)	kg/hr	54	3,559			3,613		36															
Xylan (IS)	kg/hr	12	778			790		8															
Arabinan (IS)	kg/hr	0	32			33		0															
Other Sugar Polymers (IS)	kg/hr	2	161			164		2															
Cellulase (IS)	kg/hr	234	312			546		5															
Biomass (IS)	kg/hr	92	123		275	489		5															
Zymo (IS)	kg/hr	398	531			929		9															
Lignin (IS)	kg/hr	346	22,607			22,953		230															
Gypsum (IS)	kg/hr	0	8			8		8															
Ca(OH)2 (IS)	kg/hr																						
Others (Insoluble Solids)	kg/hr	30	1,946			1,976		816															
Enthalpy Flow (millions)	Kcal/hr	-71.7	-233.1	-4.2	-2.7	-307.5	-19.8	-581.3	-705.4	-730.3	-56.4	-890.9	-881.5	-138.5	-255.9	-81.7	-208.2	-209.2	-209.2	-25.3	-65.8	0.0	-31.3
Average Density	g/ml	1.094	1.186	0.001	1.148	1.163	0.001	0.005	0.026	0.006	0.006	0.932	0.896	0.006	0.002	0.002	0.001	0.990	0.990	0.693	0.876	0.001	0.001

Heat Stream No.	MM kcal/hr		Work Stream No.	kW
QBOILER	150.67		WCOMBFAN	208.29
QH811	-9.40		WKNET	-10941.82
QM803AIR	17.49		WP811	10.07
QM811	27.69		WTOTAL	-43533.54

Eq. No.	Equipment Name	Req.	Spare	Equipment Type	Mat Const.
H-811	BFW Preheater	1	0	SHELL-TUBE	SS304
M-803	Fluidized Bed Combustion Reactor	1	0	MISCELLANEOUS	CS
M-811	Turbine/Generator	1	0	STEAM-TURBINE	0
P-811	Turbine Condensate Pump	2	0	CENTRIFUGAL	SS304

VER	DESCRIPTION	DATE
A	SUBCONTRACTOR UPDATE	4/98
B	BASECASE UPDATE	9/98
C	DESIGN REPORT	4/99
D	FINAL 1999 DESIGN REPORT	6/99
		LL 6/24/99

NREL
NATIONAL RENEWABLE ENERGY LABORATORY
Biotechnology Center For Fuels And Chemicals

SECTION A800
COMBUSTOR AND TURBO GENERATOR

R9906A.xls | PFD-P100-A802 | D

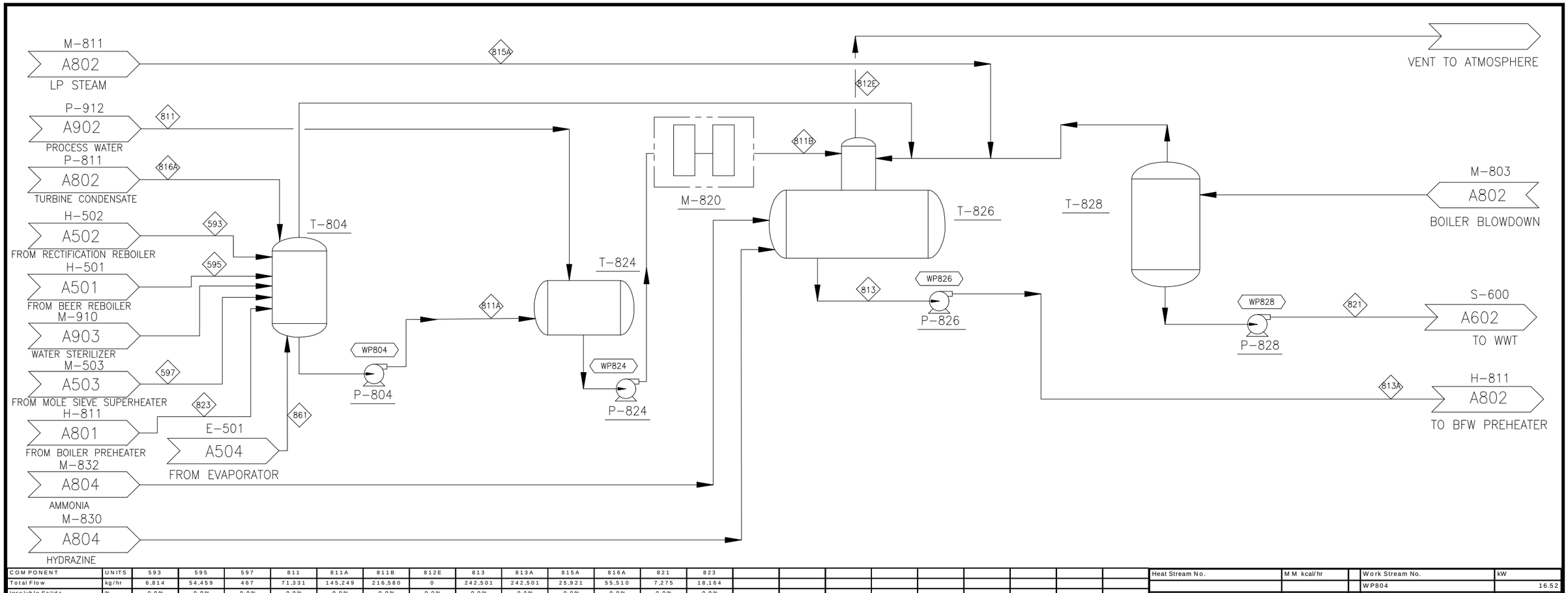

COMPONENT	UNITS	593	595	597	811	811A	811B	812E	813	813A	815A	816A	821	823
Total Flow	kg/hr	6,814	54,459	467	71,331	145,249	216,580	0	242,501	242,501	25,921	55,510	7,275	18,164
Insoluble Solids	%	0.0%	0.0%	0.0%	0.0%	0.0%	0.0%	0.0%	0.0%	0.0%	0.0%	0.0%	0.0%	0.0%
Soluble Solids	%	0.0%	0.0%	0.0%	0.0%	0.0%	0.0%	0.0%	0.0%	0.0%	0.0%	0.0%	0.0%	0.0%
Temperature	C	148	148	148	26	99	75		137	139	164	46	309	190
Pressure	atm	4.42	4.42	4.42	3.40	1.70	3.40	3.30	3.30	98.31	4.42	4.20	96.26	12.32
Vapor Fraction		0.00	0.00	0.00	0.00	0.00	0.00	0.00	0.00	0.00	1.00	0.00	0.00	0.00
Ethanol	kg/hr													
Water	kg/hr	6,814	54,459	467	71,331	145,249	216,580		242,501	242,501	25,921	55,510	7,275	18,164
Glucose (SS)	kg/hr													
Xylose (SS)	kg/hr													
Arabinose (SS)	kg/hr													
Other Sugars (SS)	kg/hr													
Cellobiose (SS)	kg/hr													
Glucose Oligomers (SS)	kg/hr													
Xylose Oligomers (SS)	kg/hr													
Other Oligomers (SS)	kg/hr													
Corn Steep Liquor (SS)	kg/hr													
(NH4)2SO4 (SS)	kg/hr													
NH4Acetate (SS)	kg/hr													
Others (Soluble Solids)	kg/hr													
Acetic Acid	kg/hr													
Sulfuric Acid	kg/hr													
Furfural	kg/hr													
HMF	kg/hr													
Carbon Dioxide	kg/hr													
Methane	kg/hr													
Oxygen	kg/hr													
Nitrogen	kg/hr													
Ammonia	kg/hr													
NH4OH	kg/hr													
Others	kg/hr													
Cellulose (IS)	kg/hr													
Xylan (IS)	kg/hr													
Arabinan (IS)	kg/hr													
Other Sugar Polymers (IS)	kg/hr													
Cellulase (IS)	kg/hr													
Biomass (IS)	kg/hr													
Zymo (IS)	kg/hr													
Lignin (IS)	kg/hr													
Gypsum (IS)	kg/hr													
Ca(OH)2 (IS)	kg/hr													
Others (Insoluble Solids)	kg/hr													
Enthalpy Flow (millions)	Kcal/hr	-24.9	-199.3	-1.7	-270.2	-539.7	-809.9		-891.6	-890.9	-81.7	-209.2	-25.3	-65.8
Average Density	g/ml	0.865	0.865	0.865	0.997	0.959	0.975		0.928	0.932	0.002	0.990	0.693	0.876

Heat Stream No.	M M kcal/hr	Work Stream No.	kW
		WP804	16.52
		WP824	13.84
		WP826	894.72
		WP828	2.29

Eq. No.	Equipment Name	Req.	Spare	Equipment Type	Mat Const.
M-820	Hot Process Water Softener System	1	0	PACKAGE	0
P-804	Condensate Pump	2	0	CENTRIFUGAL	SS316
P-824	Deaerator Feed Pump	2	0	CENTRIFUGAL	SS304
P-826	BFW Pump	5	0	CENTRIFUGAL	SS316
P-828	Blowdown Pump	2	0	CENTRIFUGAL	CS
T-804	Condensate Collection Tank	1	0	VERTICAL-VESSEL	A285C
T-824	Condensate Surge Drum	1	0	HORIZONTAL-VESSEL	SS304
T-826	Deaerator	1	0	HORIZONTAL-VESSEL	CS;SS316
T-828	Blowdown Flash Drum	1	0	HORIZONTAL-VESSEL	CS

VER	DESCRIPTION	DATE
A	SUBCONTRACTOR UPDATE	4/98
B	BASECASE UPDATE	9/98
C	DESIGN REPORT	4/99
D	FINAL 1999 DESIGN REPORT	6/99
		LL 6/24/99

NATIONAL RENEWABLE ENERGY LABORATORY
Biotechnology Center For Fuels And Chemicals

SECTION A800
BOILER FEED WATER PREPARATION

R9906A.xls | PFD-P100-A803 | D

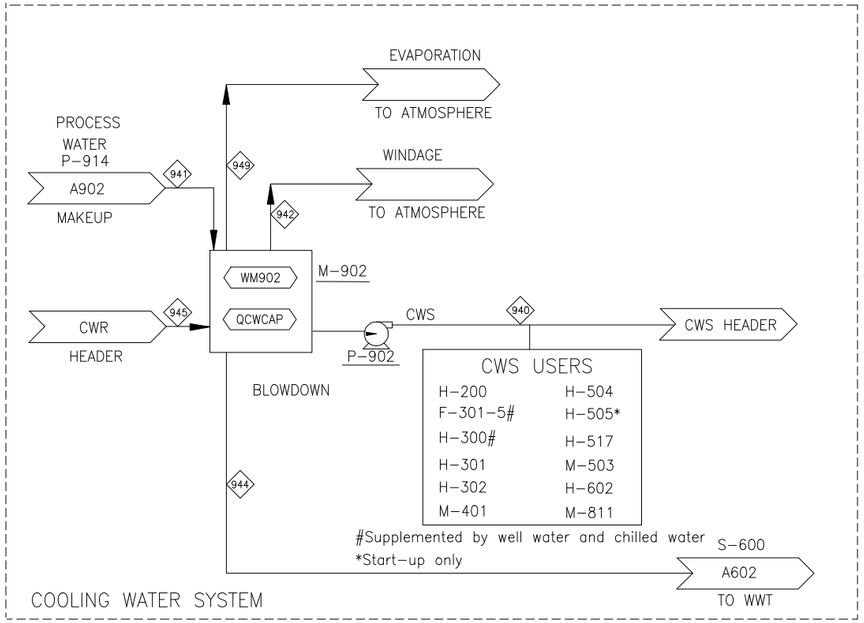

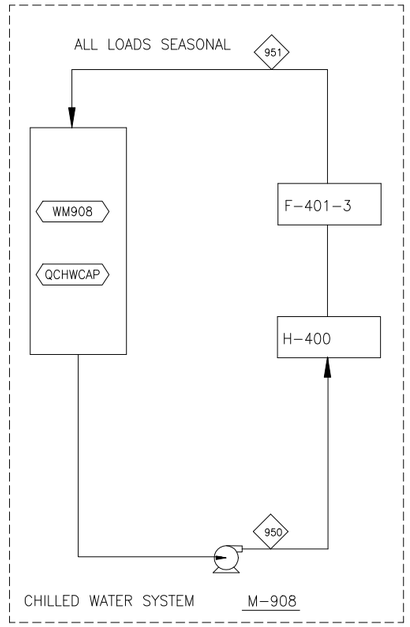

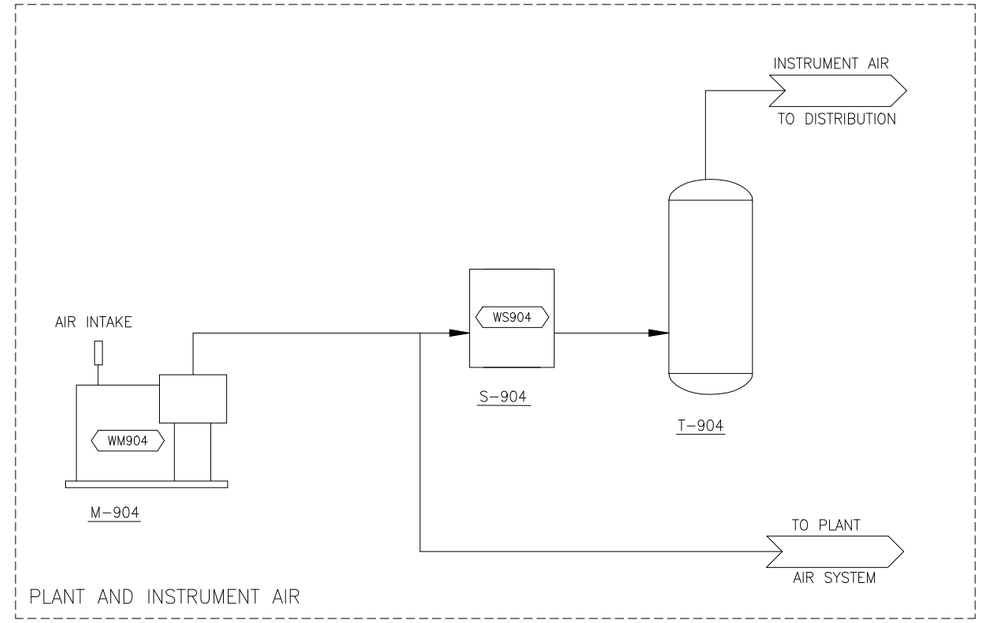

COMPONENT	UNITS	940	941	942	944	945	949	950	951
Total Flow	kg/hr	13,840,700	196,024	11,516	17,820	13,840,700	166,688	4,878,840	4,878,840
Insoluble Solids	%	0.0%	0.0%	0.0%	0.0%	0.0%	0.0%	0.0%	0.0%
Soluble Solids	%	0.0%	0.0%	0.0%	0.0%	0.0%	0.0%	0.0%	0.0%
Temperature	C	37	28	28	28	28	28	4	8
Pressure	atm	4.08	1.00	1.00	1.00	4.08	0.04	4.08	4.08
Vapor Fraction		0.00	0.00	0.00	0.00	0.00	1.00	0.00	0.00
Ethanol	kg/hr								
Water	kg/hr	13,840,700	196,024	11,516	17,820	13,840,700	166,688	4,878,840	4,878,840
Glucose (SS)	kg/hr								
Xylose (SS)	kg/hr								
Arabinose (SS)	kg/hr								
Other Sugars (SS)	kg/hr								
Cellobiose (SS)	kg/hr								
Glucose Oligomers (SS)	kg/hr								
Xylose Oligomers (SS)	kg/hr								
Other Oligomers (SS)	kg/hr								
Corn Steep Liquor (SS)	kg/hr								
(NH4)2SO4 (SS)	kg/hr								
NH4Acetate (SS)	kg/hr								
Others (Soluble Solids)	kg/hr								
Acetic Acid	kg/hr								
Sulfuric Acid	kg/hr								
Furfural	kg/hr								
HMF	kg/hr								
Carbon Dioxide	kg/hr								
Methane	kg/hr								
Oxygen	kg/hr								
Nitrogen	kg/hr								
Ammonia	kg/hr								
NH4OH	kg/hr								
Others	kg/hr								
Cellulose (IS)	kg/hr								
Xylan (IS)	kg/hr								
Arabinan (IS)	kg/hr								
Other Sugar Polymers (IS)	kg/hr								
Cellulase (IS)	kg/hr								
Biomass (IS)	kg/hr								
Zymo (IS)	kg/hr								
Lignin (IS)	kg/hr								
Gypsum (IS)	kg/hr								
Ca(OH)2 (IS)	kg/hr								
Others (Insoluble Solids)	kg/hr								
Enthalpy Flow (millions)	Kcal/hr	-52268.9	-741.9	-43.6	-67.4	-52385.2	-534.2	-18572.0	-18554.6
Average Density	g/ml	0.982	0.991	0.991	0.991	0.991	0.000	1.014	1.010

Heat Stream No.	MM kcal/hr
QCWCAP	116.24
QCHWCAP	17.43

Work Stream No.	kW
WM902	745.49
WM904	186.40
WM908	1346.93
WS904	12.00

Eq. No.	Equipment Name	Req.	Spare	Equipment Type	Mat Const.
M-902	Cooling Tower System	1	0	INDUCED-DRAFT	FIBERGLASS
M-904	Plant Air Compressor	2	1	RECIPROCATING	CS
M-908	Chilled Water Package	3	0	CENTRIFUGAL	CS
P-902	Cooling Water Pumps	1	1	CENTRIFUGAL	CS
S-904	Instrument Air Dryer	1	1	PACKAGE	CS
T-904	Plant Air Receiver	1	0	HORIZONTAL-VESSEL	CS

VER	DESCRIPTION	DATE
A	SUBCONTRACTOR UPDATE	4/98
B	BASECASE UPDATE	9/98
C	WWT UPDATE	11/98
D	FINAL 1999 DESIGN REPORT	6/99
		LL 6/24/99

NREL
NATIONAL RENEWABLE ENERGY LABORATORY
Biotechnology Center For Fuels And Chemicals

SECTION A900
COOLING WTR PLNT & INST AIR SYS

R9906A.xls | PFD-P100-A901 | D

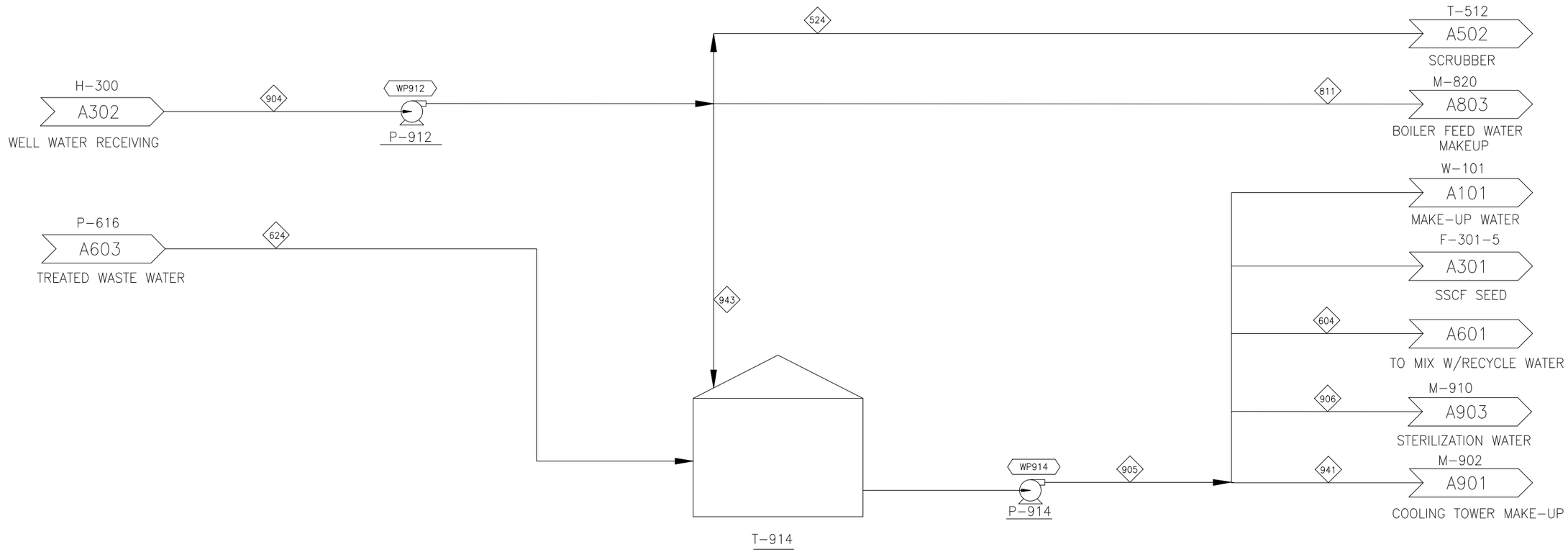

COMPONENT	UNITS	524	604	624	811	904	905	906	941	943
Total Flow	kg/hr	13,042	83,163	173,154	71,331	185,593	274,375	63	196,024	101,220
Insoluble Solids	%	0.0%	0.0%	0.0%	0.0%	0.0%	0.0%	0.0%	0.0%	0.0%
Soluble Solids	%	0.0%	0.0%	0.1%	0.0%	0.0%	0.0%	0.0%	0.0%	0.0%
Temperature	C	13	20	21	26	26	24	20	28	28
Pressure	atm	1.00	1.00	1.00	3.40	1.00	1.00	1.00	1.00	1.00
Vapor Fraction		0.00	0.00	0.00	0.00	0.00	0.00	0.00	0.00	0.00
Ethanol	kg/hr			0			0			
Water	kg/hr	13,042	83,163	172,755	71,331	185,593	273,976	63	196,024	101,220
Glucose (SS)	kg/hr									
Xylose (SS)	kg/hr									
Arabinose (SS)	kg/hr									
Other Sugars (SS)	kg/hr									
Cellobiose (SS)	kg/hr									
Glucose Oligomers (SS)	kg/hr									
Xylose Oligomers (SS)	kg/hr									
Other Oligomers (SS)	kg/hr									
Corn Steep Liquor (SS)	kg/hr			75			75			
(NH4)2SO4 (SS)	kg/hr									
NH4Acetate (SS)	kg/hr			25			25			
Others (Soluble Solids)	kg/hr									
Acetic Acid	kg/hr			2			2			
Sulfuric Acid	kg/hr									
Furfural	kg/hr			4			4			
HMF	kg/hr			1			1			
Carbon Dioxide	kg/hr			0			0			
Methane	kg/hr			0			0			
Oxygen	kg/hr			1			1			
Nitrogen	kg/hr			3			3			
Ammonia	kg/hr			5			5			
NH4OH	kg/hr			32			32			
Others	kg/hr			250			250			
Cellulose (IS)	kg/hr									
Xylan (IS)	kg/hr									
Arabinan (IS)	kg/hr									
Other Sugar Polymers (IS)	kg/hr									
Cellulase (IS)	kg/hr									
Biomass (IS)	kg/hr									
Zymo (IS)	kg/hr									
Lignin (IS)	kg/hr									
Gypsum (IS)	kg/hr									
Ca(OH)2 (IS)	kg/hr									
Others (Insoluble Solids)	kg/hr									
Enthalpy Flow (millions)	Kcal/hr	-49.5	-315.4	-656.2	-270.2	-702.8	-1039.4	-0.2	-741.9	-383.1
Average Density	g/ml	1.005	0.998	0.997	0.997	0.993	0.995	0.998	0.991	0.991

Heat Stream No.	MM kcal/hr	Work Stream No.	kW
		WP912	20.73
		WP914	60.24

Eq. No.	Equipment Name	Req.	Spare	Equipment Type	Mat Const.
P-912	Make-up Water Pump	1	1	CENTRIFUGAL	CS
P-914	Process Water Circulating Pump	2	1	CENTRIFUGAL	CS
T-914	Process Water Tank	1	0	FLAT-BTM-STORAGE	CS

VER	DESCRIPTION	DATE
A	SUBCONTRACTOR UPDATE	4/98
B	BASECASE UPDATE	9/98
C	DESIGN REPORT	2/99
D	FINAL 1999 DESIGN REPORT	6/99
		LL 6/25/99

NREL NATIONAL RENEWABLE ENERGY LABORATORY
Biotechnology Center For Fuels And Chemicals

SECTION A900
PROCESS WATER

R9906A.xls | PFD-P100-A902 | D

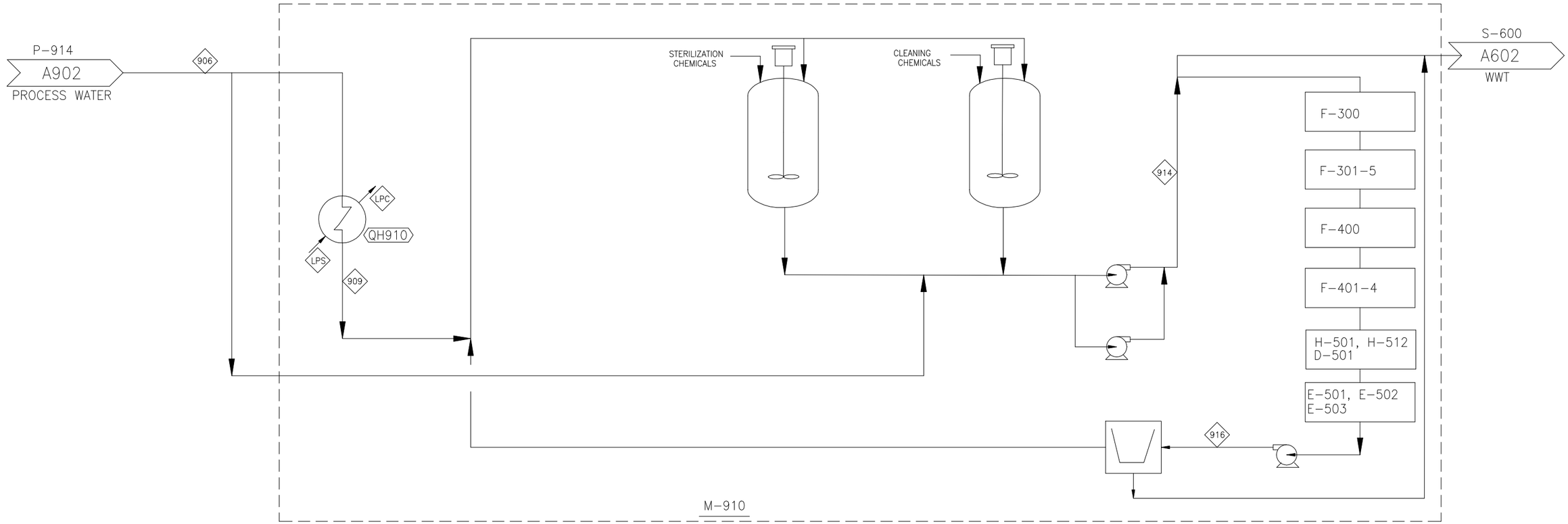

COMPONENT	UNITS	906	909	914	916
Total Flow	kg/hr	63	63	63	63
Insoluble Solids	%	0.0%	0.0%	0.0%	0.0%
Soluble Solids	%	0.0%	0.0%	0.0%	0.0%
Temperature	C	20	121	20	20
Pressure	atm	1.00	1.00	1.00	1.00
Vapor Fraction		0.00	1.00	0.00	0.00
Ethanol	kg/hr				
Water	kg/hr	63	63	63	63
Glucose (SS)	kg/hr				
Xylose (SS)	kg/hr				
Arabinose (SS)	kg/hr				
Other Sugars (SS)	kg/hr				
Cellobiose (SS)	kg/hr				
Glucose Oligomers (SS)	kg/hr				
Xylose Oligomers (SS)	kg/hr				
Other Oligomers (SS)	kg/hr				
Corn Steep Liquor (SS)	kg/hr				
(NH4)2SO4 (SS)	kg/hr				
NH4Acetate (SS)	kg/hr				
Others (Soluble Solids)	kg/hr				
Acetic Acid	kg/hr				
Sulfuric Acid	kg/hr				
Furfural	kg/hr				
HMF	kg/hr				
Carbon Dioxide	kg/hr				
Methane	kg/hr				
Oxygen	kg/hr				
Nitrogen	kg/hr				
Ammonia	kg/hr				
NH4OH	kg/hr				
Others	kg/hr				
Cellulose (IS)	kg/hr				
Xylan (IS)	kg/hr				
Arabinan (IS)	kg/hr				
Other Sugar Polymers (IS)	kg/hr				
Cellulase (IS)	kg/hr				
Biomass (IS)	kg/hr				
Zymo (IS)	kg/hr				
Lignin (IS)	kg/hr				
Gypsum (IS)	kg/hr				
Ca(OH)2 (IS)	kg/hr				
Others (Insoluble Solids)	kg/hr				
Enthalpy Flow (millions)	Kcal/hr	-0.2	-0.2	-0.2	-0.2
Average Density	g/ml	0.998	0.001	0.998	0.998

Heat Stream No.	MM kcal/hr		Work Stream No.	kW
QH910	-0.04			

Eq. No.	Equipment Name	Req.	Spare	Equipment Type	Mat Const.
M-910	CIP System	1	0	MISCELLANEOUS	CS

VER	DESCRIPTION	DATE
A	SUBCONTRACTOR UPDATE	4/98
B	BASECASE UPDATE	9/98
C	DESIGN REPORT	2/99
D	FINAL 1999 DESIGN REPORT	6/99
		LL 6/24/99

NREL
NATIONAL RENEWABLE ENERGY LABORATORY
Biotechnology Center For Fuels And Chemicals

SECTION A900
STERILE WATER & CIP/CS SYSTEMS

R9906A.xls | PFD-P100-A903 | D