June 2002 • NREL/TP-510-32438

Technical Report

Lignocellulosic Biomass to Ethanol Process Design and Economics Utilizing Co-Current Dilute Acid Prehydrolysis and Enzymatic Hydrolysis for Corn Stover

A. Aden, M. Ruth, K. Ibsen, J. Jechura,
K. Neeves, J. Sheehan, and B. Wallace
National Renewable Energy Laboratory

L. Montague, A. Slayton, and J. Lukas
Harris Group
Seattle, Washington

National Renewable Energy Laboratory

1617 Cole Boulevard
Golden, Colorado 80401-3393

NREL is a U.S. Department of Energy Laboratory
Operated by Midwest Research Institute • Battelle • Bechtel

Contract No. DE-AC36-99-GO10337

June 2002 • NREL/TP-510-32438

Lignocellulosic Biomass to Ethanol Process Design and Economics Utilizing Co-Current Dilute Acid Prehydrolysis and Enzymatic Hydrolysis for Corn Stover

A. Aden, M. Ruth, K. Ibsen, J. Jechura,
K. Neeves, J. Sheehan, and B. Wallace
National Renewable Energy Laboratory

L. Montague, A. Slayton, and J. Lukas
Harris Group
Seattle, Washington

Prepared under Task No. BFP2.A410

National Renewable Energy Laboratory

1617 Cole Boulevard
Golden, Colorado 80401-3393

NREL is a U.S. Department of Energy Laboratory
Operated by Midwest Research Institute • Battelle • Bechtel

Contract No. DE-AC36-99-GO10337

NOTICE

This report was prepared as an account of work sponsored by an agency of the United States government. Neither the United States government nor any agency thereof, nor any of their employees, makes any warranty, express or implied, or assumes any legal liability or responsibility for the accuracy, completeness, or usefulness of any information, apparatus, product, or process disclosed, or represents that its use would not infringe privately owned rights. Reference herein to any specific commercial product, process, or service by trade name, trademark, manufacturer, or otherwise does not necessarily constitute or imply its endorsement, recommendation, or favoring by the United States government or any agency thereof. The views and opinions of authors expressed herein do not necessarily state or reflect those of the United States government or any agency thereof.

Available electronically at http://www.osti.gov/bridge

Available for a processing fee to U.S. Department of Energy
and its contractors, in paper, from:
U.S. Department of Energy
Office of Scientific and Technical Information
P.O. Box 62
Oak Ridge, TN 37831-0062
phone: 865.576.8401
fax: 865.576.5728
email: reports@adonis.osti.gov

Available for sale to the public, in paper, from:
U.S. Department of Commerce
National Technical Information Service
5285 Port Royal Road
Springfield, VA 22161
phone: 800.553.6847
fax: 703.605.6900
email: orders@ntis.fedworld.gov
online ordering: http://www.ntis.gov/ordering.htm

Printed on paper containing at least 50% wastepaper, including 20% postconsumer waste

Appendix F

Process Flow Diagrams

Note: Larger format (11” x 17”) versions of these Process Flow Diagrams are available upon request from Kelly_Ibsen@nrel.gov

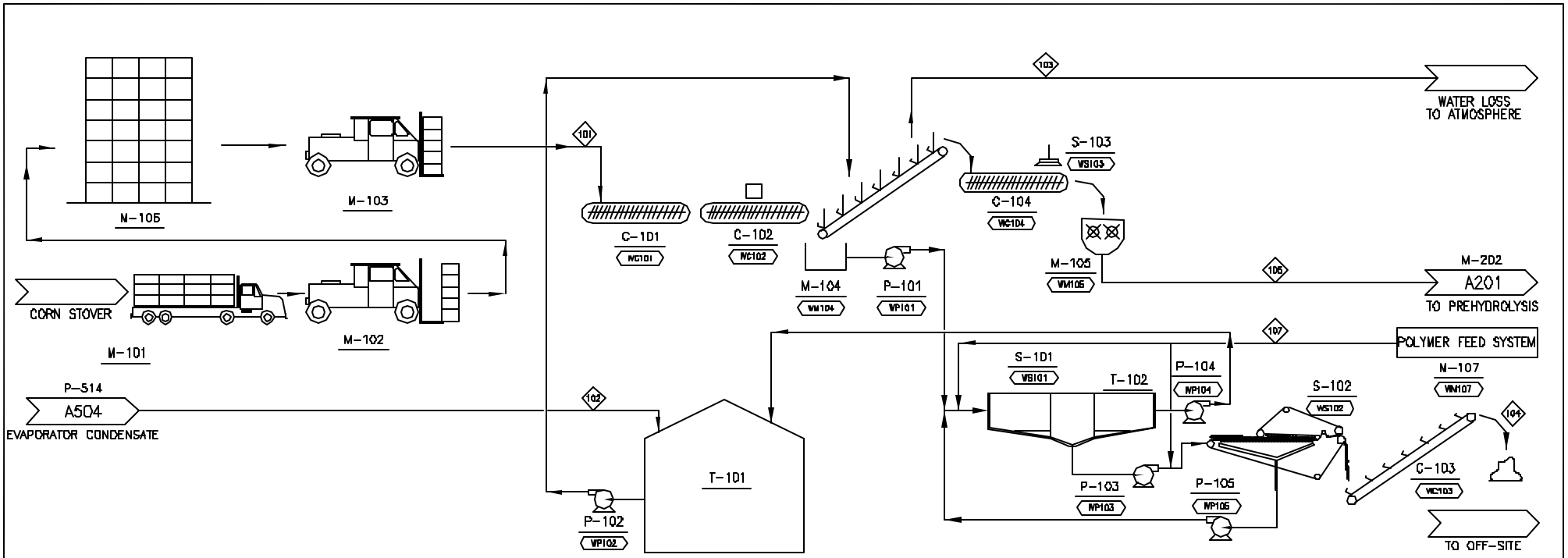

COMPONENT	UNITS	101	102	103	104	105	107
Total Flow	kg/hr	98,039	43,017	11,400	1,009	128,676	28
Insoluble Solids	%	77.4%	0.0%	0.0%	0.0%	59.0%	0.0%
Soluble Solids	%	7.6%	0.1%	0.1%	0.1%	5.8%	0.0%
Temperature	C	20	74	74	74	45	20
Pressure	atm	1.00	3.00	1.00	1.00	1.00	1.00
Vapor Fraction		0.00	0.00	0.00	0.00	0.00	0.00
Ethano	kg/hr		31	8	1	22	
Water	kg/hr	14,706	42,546	11,275	970	45,007	
Glucose (SS)	kg/hr						
Xylose (SS)	kg/hr		0	0	0	0	
Arabinose (SS)	kg/hr		0				
Other Sugars (SS)	kg/hr						
Cellobiose (SS)	kg/hr						
Glucose Oligomers (SS)	kg/hr						
Xylose Oligomers (SS)	kg/hr		0	0	0	0	
Other Oligomers (SS)	kg/hr						
Corn Steep Liquor (SS)	kg/hr		58	15	1	41	
Others (Soluble Solids)	kg/hr	7,417				7,417	
Acetic Acid	kg/hr		325	86	7	232	
Sulfuric Acid	kg/hr		0	0	0	0	
Furfural	kg/hr		48	13	1	34	
HMF	kg/hr		7	2	0	5	
Carbon Dioxide	kg/hr						
Methane	kg/hr						
Oxygen	kg/hr						
Nitrogen	kg/hr						
Others	kg/hr		2	0	28	1	28
Cellulose (IS)	kg/hr	31,187				31,187	
Xylan (IS)	kg/hr	17,570				17,570	
Arabinan (IS)	kg/hr	2,435				2,435	
Other Sugar Polymers (IS)	kg/hr	2,919				2,919	
Cellulase (IS)	kg/hr						
Biomass (IS)	kg/hr						
Zymo (IS)	kg/hr						
Lignin (IS)	kg/hr	15,002				15,002	
Gypsum (IS)	kg/hr						
Ca(OH)2 (IS)	kg/hr						
Others (Insoluble Solids)	kg/hr	6,804				6,804	
Enthalpy Flow (millions)	Kcal/hr	-170.1	-160.0	-42.4	-3.8	-284.0	-0.1
Average Density	g/ml	1.4709	0.9442	0.9443	0.9443	1.3433	0.9983

Work Stream No.	kW	Work Stream No.	kW
WC101	55.93	WP102	74.09
WC102	11.18	WP103	2.94
WC103	2.80	WP104	37.05
WC104	11.18	WP105	1.18
WM104	83.90	WS101	5.59
WM105	1118.56	WS102	4.19
WM107	25.00	WS103	0.00
WP101	37.06		

Eq. No.	Equipment Name	Req	Spare	Equipment Type	Mat Const.
C-101	Bale Transport Conveyor	2		BELT	CS
C-102	Bale Unwrapping Conveyor	2		BELT	CS
C-103	Belt Press Discharge Conveyor	1		BELT	CS
C-104	Shredder Feed Conveyor	4		BELT	CS
M-101	Truck Scales	2		TRUCK-SCALE	CONCRETE
M-102	Truck Unloading Forklifi	4	1	LOADER	
M-103	Bale Moving Forklifi	4		LOADER	
M-104	Corn Stover Wash Table	2			A283
M-105	Shredder	4			ALLOY STEEL
M-106	Concrete Feedstock-Storage Slab	1		CONCRETE-SLAB	CONCRETE
M-107	Polymer Feed System	1		MISCELLANEOUS	CS
P-101	Wash Table Pump	2	1	CENTRIFUGAL	CS; RUBBER
P-102	Wash Water Pump	2	1	CENTRIFUGAL	CS; SS316
P-103	Clarifier Underflow Pump	1	1	RECIPROCATING	CS; RUBBER
P-104	Clarified Water Pump	1	1	CENTRIFUGAL	CS; SS316
P-105	Belt Press Sump Pump	1	1	SLURRY	CS
S-101	Clarifier Thickener	1			CS
S-102	Belt Press	1		FILTER-PRESS	304SS; FILTER
S-103	Magnetic Separator	1		MAGNET	
T-101	Wash Water Tank	1		VERTICAL-VESSEL	CS
T-102	Clarifier Thickener Tank	1		CLARIFER	CEMENT

VER	DESCRIPTION	DATE
A	ESP PROCESS CASE	1/2/02
B	2002 DESIGN REPORT	5/22/02
		M 5/22/02

NREL NATIONAL RENEWABLE ENERGY LABORATORY
Biotechnology Center For Fuels And Chemicals

SECTION A100
CORN STOVER FEED HANDLING

102031.xls | PFD-P110-A101 | B

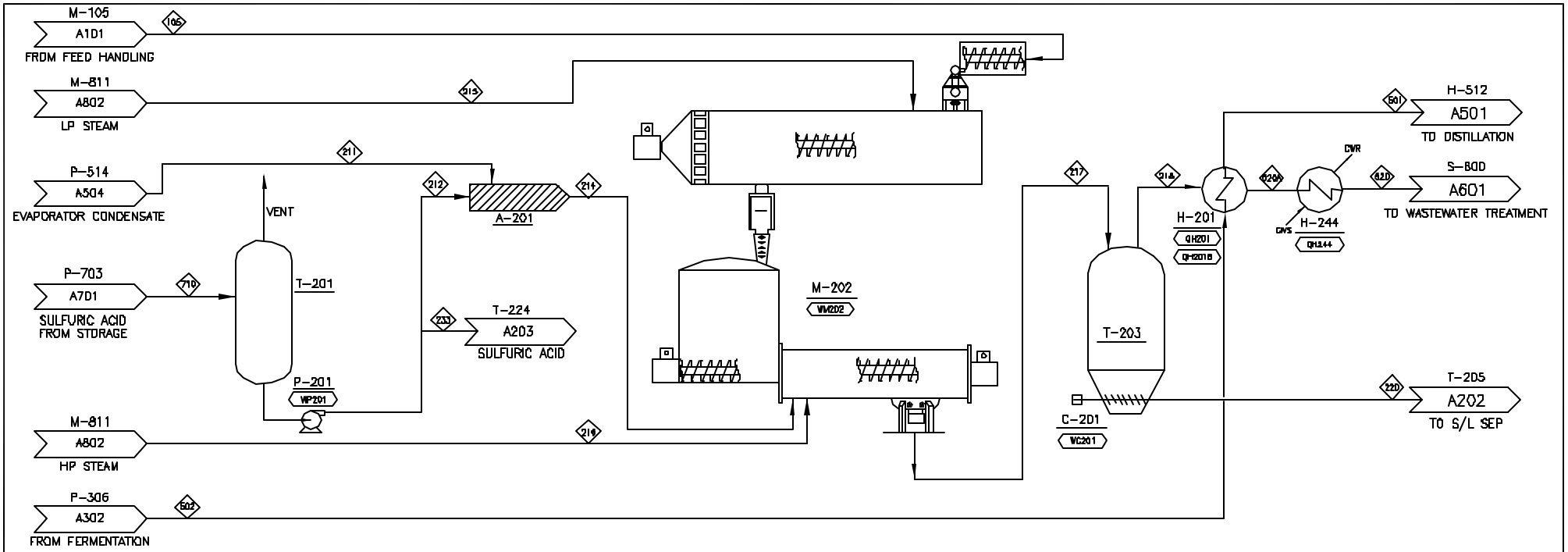

COMPONENT	UNITS	105	211	212	214	215	216	217	218	220	233	501	502	520	520A	710
Total Flow	kg/hr	128,676	99,344	2,104	101,447	11,507	37,234	278,865	53,152	225,713	1,185	449,353	449,353	53,152	53,152	3,288
Insoluble Solids	%	59.0%	0.0%	0.0%	0.0%	0.0%	0.0%	17.2%	0.0%	21.3%	0.0%	5.0%	5.0%	0.0%	0.0%	0.0%
Soluble Solids	%	5.8%	0.1%	0.0%	0.1%	0.0%	0.0%	12.6%	0.1%	15.6%	0.0%	3.6%	3.6%	0.1%	0.1%	0.0%
Temperature	C	45	74	20	74	164	268	190	101	101	20	95	41	30	100	20
Pressure	atm	1.00	3.00	3.40	4.00	4.42	13.00	12.05	1.00	1.00	3.40	4.00	0.90	1.00	1.00	1.00
Vapor Fraction		0.00	0.00	0.00	0.00	1.00	1.00	0.00	1.00	0.00	0.00	0.00	0.00	0.00	0.00	0.00
Ethanol	kg/hr	22	71		71			93	73	20		24,825	24,825	73	73	
Water	kg/hr	45,007	98,256		98,256	11,507	37,234	189,218	52,244	136,974		374,828	374,828	52,244	52,244	
Glucose (SS)	kg/hr							2,426		2,426		82	82			
Xylose (SS)	kg/hr	0	0		0			17,969	0	17,969		909	909	0	0	
Arabinose (SS)	kg/hr		0		0			2,490	0	2,490		217	217	0	0	
Other Sugars (SS)	kg/hr							2,919		2,919		254	254			
Cellobiose (SS)	kg/hr							230		230		360	360			
Glucose Oligomers (SS)	kg/hr							291		291		1,853	1,853			
Xylose Oligomers (SS)	kg/hr	0	0		0			500	0	500		646	646	0	0	
Other Oligomers (SS)	kg/hr							750		750		969	969			
Corn Steep Liquor (SS)	kg/hr	41	133		133			174	48	126		1,459	1,459	48	48	
Others (Soluble Solids)	kg/hr	7,417						7,417		7,417		9,581	9,581			
Acetic Acid	kg/hr	232	751		751			3,426	268	3,158		5,258	5,258	268	268	
Sulfuric Acid	kg/hr	0	0	2,104	2,104			2,104	0	2,104	1,185	154	154	0	0	3,288
Furfural	kg/hr	34	111		111			727	449	278		576	576	449	449	
HMF	kg/hr	5	17		17			114	70	43		90	90	70	70	
Carbon Dioxide	kg/hr											440	440			
Methane	kg/hr															
Oxygen	kg/hr											0	0			
Nitrogen	kg/hr											0	0			
Others	kg/hr	1	4		4			5	0	5		4,276	4,276	0	0	
Cellulose (IS)	kg/hr	31,187						28,567		28,567		1,365	1,365			
Xylan (IS)	kg/hr	17,570						439		439		439	439			
Arabinan (IS)	kg/hr	2,435						61		61		61	61			
Other Sugar Polymers (IS)	kg/hr	2,919						73		73		73	73			
Cellulase (IS)	kg/hr											650	650			
Biomass (IS)	kg/hr											0	0			
Zymo (IS)	kg/hr											1,088	1,088			
Lignin (IS)	kg/hr	15,002						14,251		14,251		14,252	14,252			
Gypsum (IS)	kg/hr											28	28			
Ca(OH)2 (IS)	kg/hr															
Others (Insoluble Solids)	kg/hr	6,804						4,620		4,620		4,620	4,620			
Enthalpy Flow (millions)	Kcal/hr	-284.0	-369.5	-4.1	-373.6	-36.2	-115.2	-809.0	-166.8	-642.2	-2.3	-1488.8	-1510.9	-198.6	-195.0	-6.4
Average Density	g/ml	1.3433	0.9442	1.8166	0.9489	0.0022	0.0053	0.9973	0.0006	1.1246	1.8166	0.9585	0.9520	0.9903	0.9195	1.8166

Heat Stream No.	MM kcal/hr	Work Stream No.	kW
QH201	-0.19	WC201	37.08
QH201B	-22.31	WM202	699.80
QH244	3.64	WP201	1.16

Eq. No.	Equipment Name	Req	Spare	Equipment Type	Mat Const.
A-201	In-line Sulfuric Acid Mixer	1			SS304
C-201	Hydrolyzate Screw Conveyor	1		SCREW	SS316
H-201	Beer Column Feed Economizer	2	1	SHELL-TUBE	304SS
H-244	Waste Vapor Condensor	2	1	SHELL-TUBE	304SS
M-202	Prehydrolysis/Screw Feeder/Reactor	3		VESSEL W/ PADDLE	ALLOY 825-CLA
P-201	Sulfuric Acid Pump	1	1	CENTRIFUGAL	SS304
T-201	Sulfuric Acid Tank	1		VERTICAL-VESSEL	PLASTIC
T-203	Blowdown Tank	1		VERTICAL-VESSEL	SS316

VER	DESCRIPTION	DATE
A	BIP PROGRESS CHART	1/3/01
B	2001 DESIGN REPORT	4/22/01

NATIONAL RENEWABLE ENERGY LABORATORY
Biotechnology Center For Fuels And Chemicals

SECTION A200
PREHYDROLYSIS

10203l.xls | PFD-P11D-A201 | B

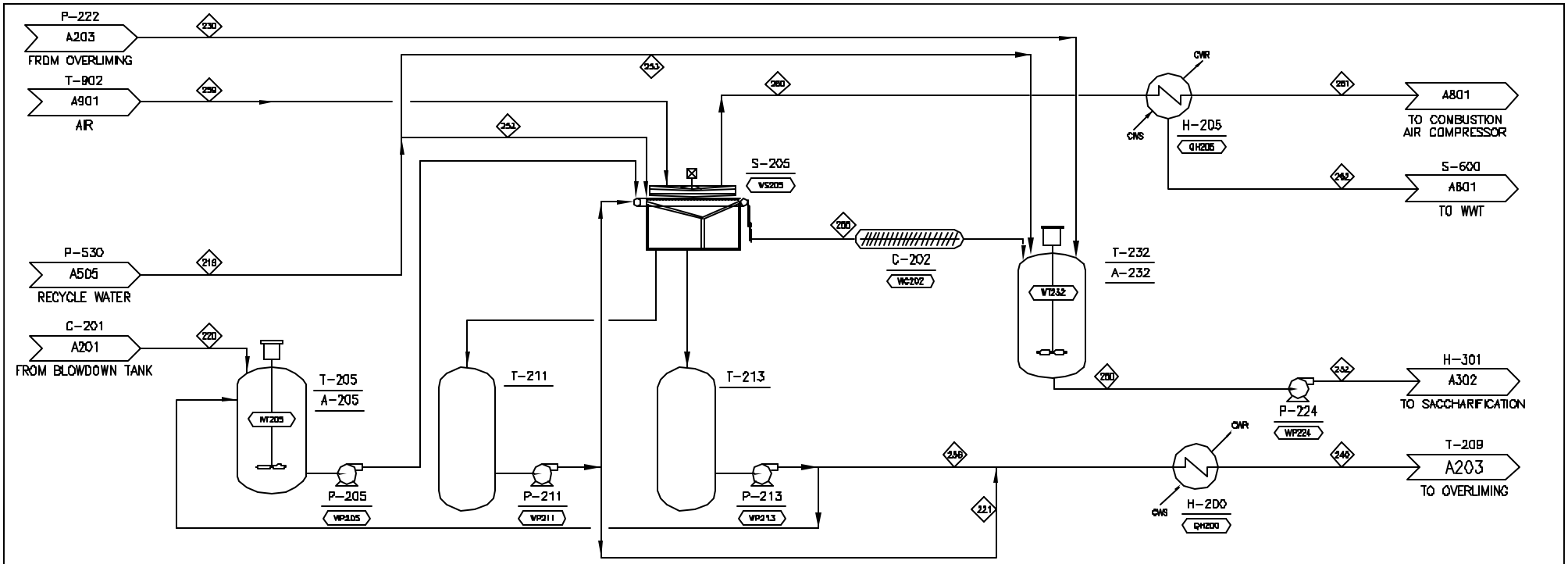

COMPONENT	UNITS	219	220	221	230	232	240	250	252	253	255	256	259	260	261	262
Total Flow	kg/hr	207,096	225,713	138,563	265,125	428,764	268,762	428,764	130,913	76,182	87,456	130,199	4,687	5,094	4,894	200
Insoluble Solids	%	0.2%	21.3%	0.2%	0.0%	11.2%	0.1%	11.2%	0.2%	0.2%	54.9%	0.0%	0.0%	0.0%	0.0%	0.0%
Soluble Solids	%	1.7%	15.6%	19.7%	13.1%	9.0%	13.0%	9.0%	1.7%	1.7%	2.7%	5.9%	0.0%	0.0%	0.0%	0.0%
Temperature	C	46	101	101	53	51	50	51	46	46	50	55	40	50	38	38
Pressure	atm	1.00	1.00	1.00	1.00	1.00	1.00	1.00	1.00	1.00	1.00	1.00	9.51	1.00	1.00	1.00
Vapor Fraction		0.00	0.00	0.00	0.00	0.00	0.00	0.00	0.00	0.00	0.00	0.00	1.00	1.00	1.00	0.00
Ethanol	kg/hr	28	20	15	36	47	36	47	18	10	1	21		0	0	0
Water	kg/hr	200,466	136,974	106,622	225,312	335,811	226,537	335,811	126,722	73,744	36,755	119,915		404	205	199
Glucose (SS)	kg/hr	19	2,426	1,888	2,263	2,432	2,275	2,432	12	7	163	387				
Xylose (SS)	kg/hr	210	17,969	13,987	16,806	18,087	16,898	18,087	132	77	1,204	2,910				
Arabinose (SS)	kg/hr	50	2,490	1,938	2,342	2,528	2,355	2,528	32	18	167	417				
Other Sugars (SS)	kg/hr	59	2,919	2,272	2,745	2,962	2,760	2,962	37	22	196	488				
Cellobiose (SS)	kg/hr	83	230	179	266	312	267	312	52	31	15	88				
Glucose Oligomers (SS)	kg/hr	427	291	227	539	716	542	716	270	157	20	315				
Xylose Oligomers (SS)	kg/hr	149	500	389	558	646	561	646	94	55	34	171				
Other Oligomers (SS)	kg/hr	223	750	584	837	969	841	969	141	82	50	257				
Corn Steep Liquor (SS)	kg/hr	145	126	98	208	270	209	270	91	53	8	111		0	0	0
Others (Soluble Solids)	kg/hr	2,209	7,417	5,773	8,271	9,581	8,316	9,581	1,397	813	497	2,543				
Acetic Acid	kg/hr	1,341	3,158	2,458	3,773	4,477	3,794	4,477	848	493	210	1,336		1	1	1
Sulfuric Acid	kg/hr	36	2,104	1,637		154	1,985	154	22	13	141	348		0		0
Furfural	kg/hr	301	278	217	448	576	450	576	190	111	17	233		2	1	0
HMF	kg/hr	47	43	34	70	90	70	90	30	17	3	38		0	0	0
Carbon Dioxide	kg/hr	29			18	29	19	29	19	11		19				
Methane	kg/hr															
Oxygen	kg/hr	0			0	0	0	0	0	0	0	0	984	984	984	0
Nitrogen	kg/hr	0			0	0	0	0	0	0	0	0	3,703	3,702	3,702	0
Others	kg/hr	952	5	4	603	954	607	954	602	350	0	603		0	0	0
Cellulose (IS)	kg/hr	7	28,567	143	1	28,432	143	28,432	4	3	28,429					
Xylan (IS)	kg/hr	2	439	2	0	439	2	439	1	1	438					
Arabinan (IS)	kg/hr	0	61	0	0	61	0	61	0	0	61					
Other Sugar Polymers (IS)	kg/hr	0	73	0	0	73	0	73	0	0	73					
Cellulase (IS)	kg/hr	81				81		81	51	30	51					
Biomass (IS)	kg/hr	0				0		0	0	0	0					
Zymo (IS)	kg/hr	136				136		136	86	50	86					
Lignin (IS)	kg/hr	71	14,251	71	0	14,252	71	14,252	45	26	14,225					
Gypsum (IS)	kg/hr	0			28	28		28	0	0	0					
Ca(OH)2 (IS)	kg/hr															
Others (Insoluble Solids)	kg/hr	23	4,620	23	0	4,620	23	4,620	15	8	4,612					
Enthalpy Flow (millions)	Kcal/hr	-755.7	-642.2	-425.6	-874.2	-1389.4	-883.9	-1389.4	-477.7	-278.0	-237.2	-455.8	0.0	-1.3	-0.6	-0.8
Average Density	g/ml	0.9793	1.1246	0.9974	1.0158	1.0720	1.0207	1.0720	0.9793	0.9793	1.3246	0.9855	0.0106	0.0010	0.0011	0.9808

Heat Stream No.	MM kcal/hr	Work Stream No.	kW
QH200	2.44	WC202	26.76
QH205	0.13	WP205	159.88
		WP211	14.27
		WP213	221.34
		WP224	83.85
		WS205	96.02
		WT205	15.42
		WT232	30.24

Eq. No.	Equipment Name	Req.	Spare	Equipment Type	Mat Const.
A-205	Hydrolyzate Mix Tank Agitator	1		FIXED-PROP	SS
A-232	Reslurrying Tank Agitator	1		FIXED-PROP	SS
C-202	Hydrolysate Washed Solids Belt Co	1		BELT	CS
H-200	Hydrolyzate Cooler	1		SHELL-TUBE	304SS;CS
H-205	Pneumapress Vent Condensor	1		SHELL-TUBE	CS
P-205	Pneumapress Feed Pump	2	1	CENTRIFUGAL	SS316
P-211	Primary Filtrate Pump	1	1	CENTRIFUGAL	SS316
P-213	Wash Filtrate Pump	1	1	CENTRIFUGAL	SS316
P-224	Saccharification Feed Pump	2	1	ROTARY-LOBE	304SS
S-205	Pneumapress Filter	3		PNEUMAPRESS	SS316
T-205	Hydrolyzate Mixing Tank	1		FLAT-BTM-STORAG	SS304
T-211	Primary Filtrate Tank	1		VERTICAL-VESSEL	SS316
T-213	Wash Filtrate Tank	1		VERTICAL-VESSEL	SS316
T-232	Slurrying Tank	1		FLAT-BTM-STORAG	SS304

VER	DESCRIPTION	DATE
A	DEF MODELS CASE	4/02
B	2002 DESIGN REPORT	5/22/03
		5/23/02

NATIONAL RENEWABLE ENERGY LABORATORY
Biotechnology Center For Fuels And Chemicals

SECTION A200
SOLID-LIQUID SEPARATION

I0203I.xls | PFD-P110-A202 | B

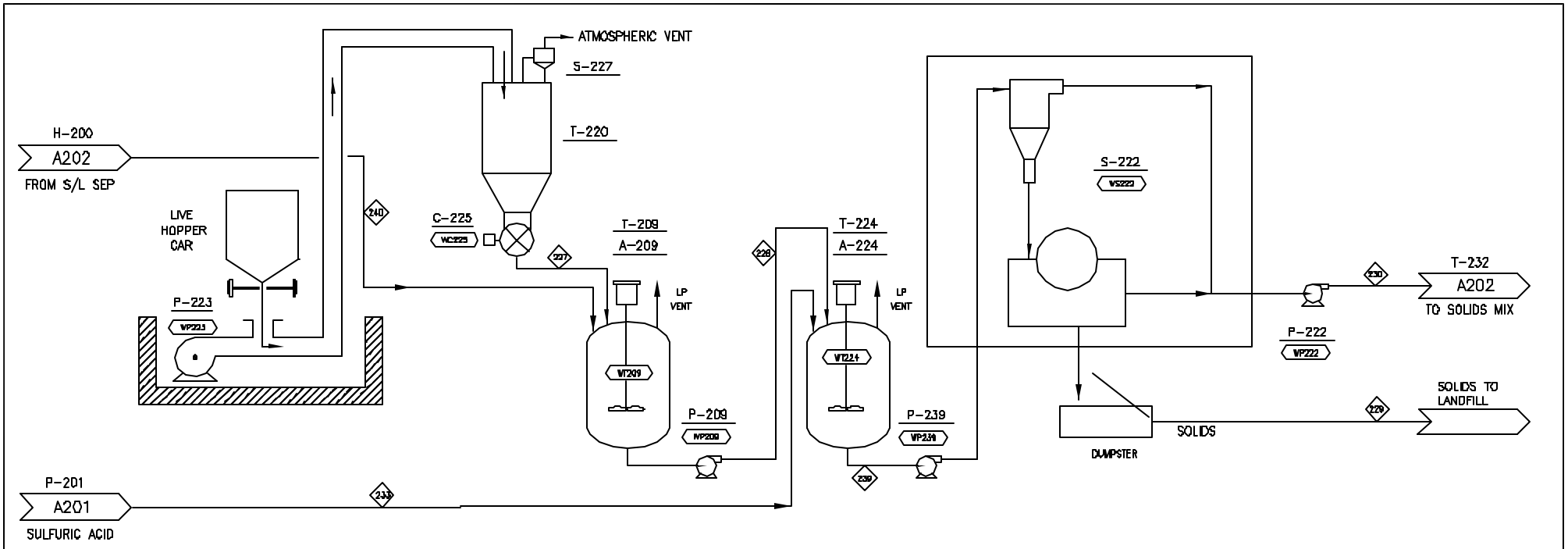

COMPONENT	UNITS	227	228	229	230	233	239	240
Total Flow	kg/hr	2,395	271,157	7,217	265,125	1,185	272,342	268,762
Insoluble Solids	%	100.0%	1.7%	80.0%	0.0%	0.0%	2.1%	0.1%
Soluble Solids	%	0.0%	12.9%	2.6%	13.1%	0.0%	12.9%	13.0%
Temperature	C		50	53	53	20	53	50
Pressure	atm	1.00	1.00	1.00	1.00	3.40	1.00	1.00
Vapor Fraction		0.00	0.00	0.00	0.00	0.00	0.00	0.00
Ethanol	kg/hr		36	0	36		36	36
Water	kg/hr		226,537	1,225	225,312		226,537	226,537
Glucose (SS)	kg/hr		2,275	12	2,263		2,275	2,275
Xylose (SS)	kg/hr		16,898	91	16,806		16,898	16,898
Arabinose (SS)	kg/hr		2,355	13	2,342		2,355	2,355
Other Sugars (SS)	kg/hr		2,760	15	2,745		2,760	2,760
Cellobiose (SS)	kg/hr		267	1	266		267	267
Glucose Oligomers (SS)	kg/hr		542	3	539		542	542
Xylose Oligomers (SS)	kg/hr		561	3	558		561	561
Other Oligomers (SS)	kg/hr		841	5	837		841	841
Corn Steep Liquor (SS)	kg/hr		209	1	208		209	209
Others (Soluble Solids)	kg/hr		8,316	45	8,271		8,316	8,316
Acetic Acid	kg/hr		3,794	21	3,773		3,794	3,794
Sulfuric Acid	kg/hr					1,185		1,985
Furfural	kg/hr		450	2	448		450	450
HMF	kg/hr		70	0	70		70	70
Carbon Dioxide	kg/hr		19	0	18		19	19
Methane	kg/hr							
Oxygen	kg/hr		0	0	0		0	0
Nitrogen	kg/hr		0	0	0		0	0
Others	kg/hr		607	3	603		607	607
Cellulose (IS)	kg/hr		143	142	1		143	143
Xylan (IS)	kg/hr		2	2	0		2	2
Arabinan (IS)	kg/hr		0	0	0		0	0
Other Sugar Polymers (IS)	kg/hr		0	0	0		0	0
Cellulase (IS)	kg/hr							
Biomass (IS)	kg/hr							
Zymo (IS)	kg/hr							
Lignin (IS)	kg/hr		71	71	0		71	71
Gypsum (IS)	kg/hr		3,485	5,537	28		5,565	
Ca(OH)2 (IS)	kg/hr	2,395	895					
Others (Insoluble Solids)	kg/hr		23	23	0		23	23
Enthalpy Flow (millions)	Kcal/hr	-7.6	-892.6	-20.7	-874.2	-2.3	-894.9	-883.9
Average Density	g/ml	2.3430	1.0397	2.0146	1.0158	1.8166	1.0422	1.0207

Heat Stream No.	MM kcal/hr		Work Stream No.	kW
			WC225	0.84
			WP209	57.59
			WP222	57.01
			WP223	28.74
			WP239	38.64
			WS222	30.34
			WT209	25.97
			WT224	104.41

Eq. No.	Equipment Name	Req.	Spare	Equipment Type	Mat Const.
A-209	Overliming Tank Agitator	1		FIXED-PROP	SS
A-224	Reacidification Tank Agitator	1		FIXED-PROP	SS
C-225	Lime Solids Feeder	1		ROTARY-VALVE	A285C
P-209	Overlimed Hydrolyzate Pump	1	1	CENTRIFUGAL	304SS
P-222	Filtered Hydrolyzate Pump	1	1	CENTRIFUGAL	304SS
P-223	Lime Unloading Blower	1		CENTRIFUGAL	C.S.
P-239	Reacidified Liquor Pump	1	1	CENTRIFUGAL	SS304
S-222	Hydroclone & Rotary Drum Filter	1		ROTARY-DRUM	EPOXY LINED
S-227	LimeDust Vent Baghouse	1		FABRIC-FILTER	A285C;POLYES
T-209	Overliming Tank	1		VERTICAL-VESSEL	SS304
T-220	Lime Storage Bin	1		LIVE-BTM-BIN	CS
T-224	Reacidification Tank	1		FLAT-BTM-STORAG	SS304

VER	DESCRIPTION	DATE
A	ISP PROCESS CASE	1/2/02
B	2001 DESIGN REPORT	5/22/01

NATIONAL RENEWABLE ENERGY LABORATORY
Biotechnology Center For Fuels And Chemicals

SECTION A200
LIME ADDITION

10203l.xls | PFD-P110-A203 | B

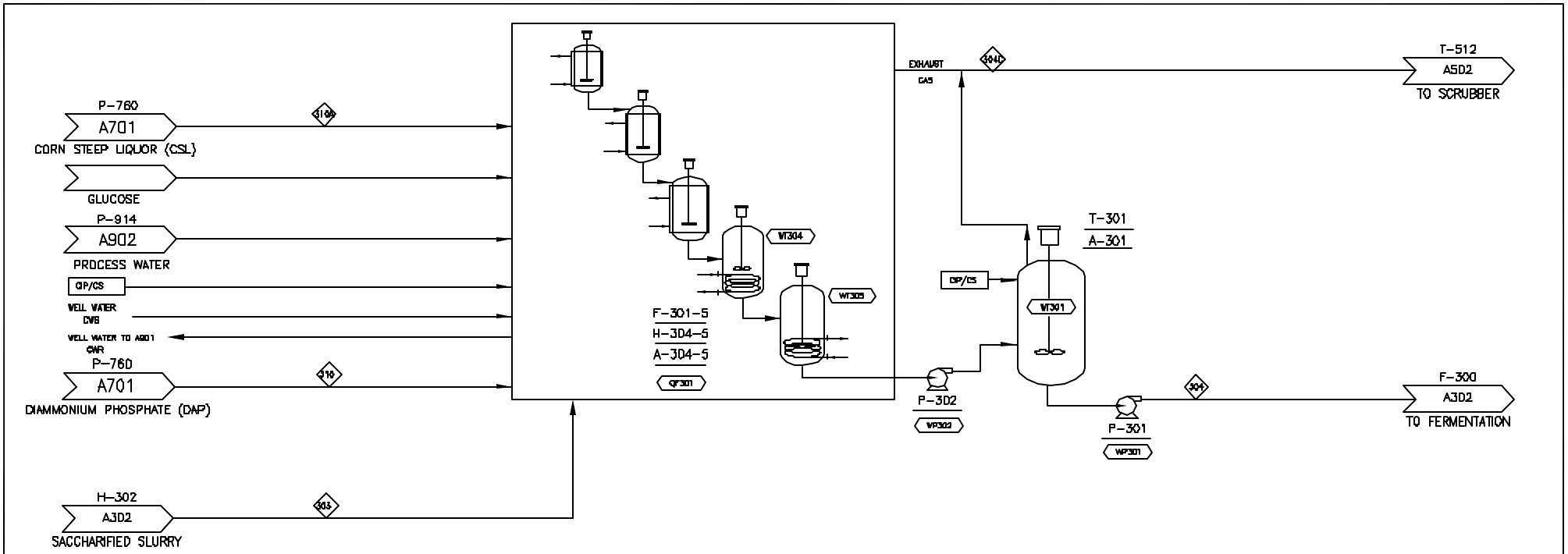

COMPONENT	UNITS	303	304	304C	310	310A
Total Flow	kg/hr	43,559	41,391	2,415	28	219
Insoluble Solids	%	5.0%	5.7%	0.0%	0.0%	0.0%
Soluble Solids	%	15.7%	4.6%	0.0%	0.0%	100.0%
Temperature	C	41	41	41	20	20
Pressure	atm	1.00	1.00	1.00	1.00	1.00
Vapor Fraction		0.00	0.00	1.00	0.00	0.00
Ethanol	kg/hr	5	2,335	70		
Water	kg/hr	33,919	33,881	76		
Glucose (SS)	kg/hr	3,119	103			
Xylose (SS)	kg/hr	1,809	156			
Arabinose (SS)	kg/hr	253	32			
Other Sugars (SS)	kg/hr	296	37			
Cellobiose (SS)	kg/hr	36	36			
Glucose Oligomers (SS)	kg/hr	185	185			
Xylose Oligomers (SS)	kg/hr	65	65			
Other Oligomers (SS)	kg/hr	97	97			
Corn Steep Liquor (SS)	kg/hr	27	224	0		219
Others (Soluble Solids)	kg/hr	958	958			
Acetic Acid	kg/hr	448	527	1		
Sulfuric Acid	kg/hr	15	15	0		
Furfural	kg/hr	58	57	1		
HMF	kg/hr	9	9	0		
Carbon Dioxide	kg/hr	3	40	2,235		
Methane	kg/hr					
Oxygen	kg/hr	0	0	32		
Nitrogen	kg/hr	0	0	0		
Others	kg/hr	95	292	0	28	
Cellulose (IS)	kg/hr	136	136			
Xylan (IS)	kg/hr	44	44			
Arabinan (IS)	kg/hr	6	6			
Other Sugar Polymers (IS)	kg/hr	7	7			
Cellulase (IS)	kg/hr	65	65			
Biomass (IS)	kg/hr	0	0			
Zymo (IS)	kg/hr	14	193			
Lignin (IS)	kg/hr	1,425	1,425			
Gypsum (IS)	kg/hr	3	3			
Ca(OH)2 (IS)	kg/hr					
Others (Insoluble Solids)	kg/hr	462	462			
Enthalpy Flow (millions)	Kcal/hr	-141.7	-137.7	-5.1	-0.1	-0.8
Average Density	g/ml	1.0754	1.0176	0.0016	1.0096	0.9983

Heat Stream No.	MM kcal/hr	Work Stream No.	kW
QF301	0.21	WP301	16.95
		WP302	16.95
		WT301	23.40
		WT304	11.70
		WT305	39.00

Eq. No.	Equipment Name	Req	Spare	Equipment Type	Mat Const.
A-301	Seed Hold Tank Agitator	1		FIXED-PROP	SS304
A-304	4th Seed Vessel Agitator	2		FIXED-PROP	SS
A-305	5th Seed Vessel Agitator	2		FIXED-PROP	SS
F-301	1st Seed Fermentor	2		VERTICAL-VESSEL	SS304
F-302	2nd Seed Fermentor	2		VERTICAL-VESSEL	SS304
F-303	3rd Seed Fermentor	2		VERTICAL-VESSEL	SS304
F-304	4th Seed Fermentor	2		FLAT-BTM-STORAG	SS304
F-305	5th Seed Fermentor	2		FLAT-BTM-STORAG	SS304
H-304	4th Seed Fermentor Coil	1		IMMERSED-COIL	SS
H-305	5th Seed Fermentor Coil	1		IMMERSED-COIL	SS
P-301	Seed Hold Transfer Pump	1	1	ROTARY-LOBE	SS304
P-302	Seed Transfer Pump	2		ROTARY-LOBE	SS304
T-301	Seed Hold Tank	1		FLAT-BTM-STORAG	SS304

VER	DESCRIPTION	DATE
A	CIP PROCESS CHANGE	1/3/02
B	2002 NREL REPORT	5/23/02
		KG 6/22/02

NREL NATIONAL RENEWABLE ENERGY LABORATORY
Biotechnology Center For Fuels And Chemicals

SECTION A300
SEED PRODUCTION

I0203I.xls | PFD-P110-A301 | B

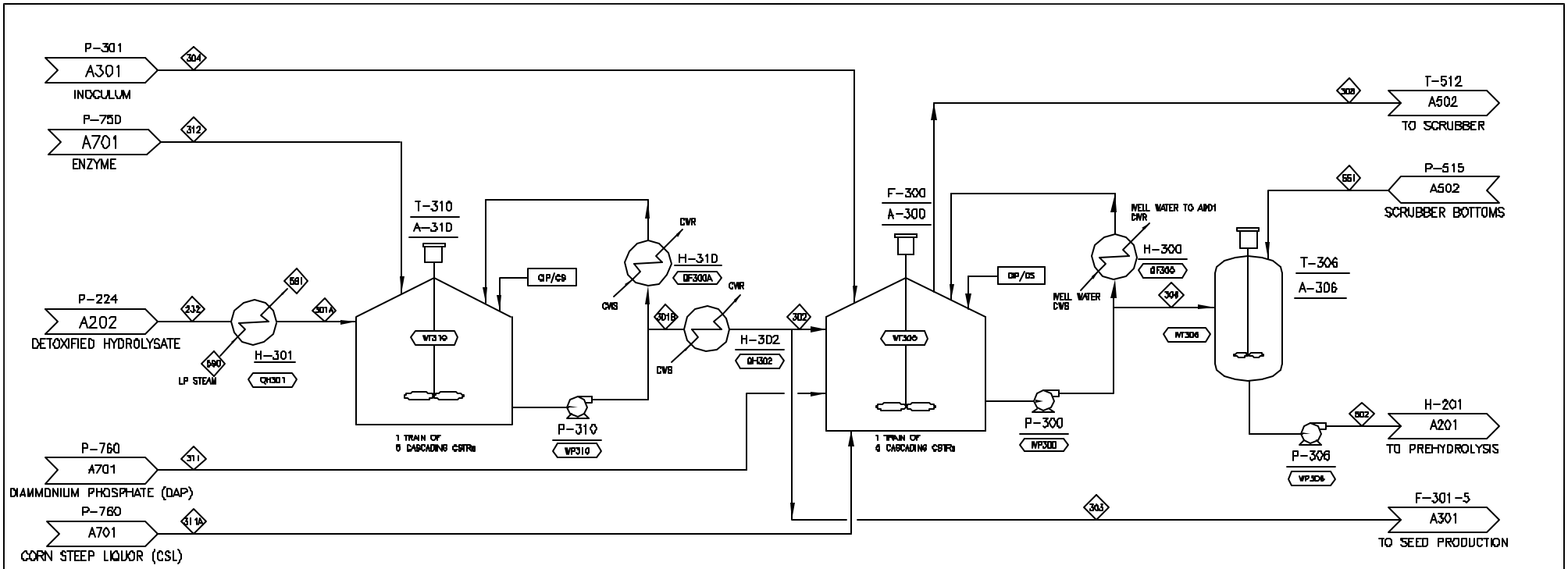

COMPONENT	UNITS	232	301A	301B	302	303	304	306	308	311	311A	312	502	551	590	591
Total Flow	kg/hr	428,764	428,764	435,588	392,029	43,559	41,391	412,222	22,420	136	1,087	6,824	449,353	37,130	9,490	9,490
Insoluble Solids	%	11.2%	11.2%	5.0%	5.0%	5.0%	5.7%	5.5%	0.0%	0.0%	0.0%	8.3%	5.0%	0.0%	0.0%	0.0%
Soluble Solids	%	9.0%	9.0%	15.7%	15.7%	15.7%	4.6%	4.0%	0.0%	0.0%	100.0%	0.0%	3.6%	0.0%	0.0%	0.0%
Temperature	C	51	65	65	41	41	41	41	41	20	20	20	41	39	164	148
Pressure	atm	1.00	1.00	1.00	1.00	1.00	1.00	1.00	1.00	1.00	1.00	1.00	0.90	0.90	4.42	4.42
Vapor Fraction		0.00	0.00	0.00	0.00	0.00	0.00	0.00	1.00	0.00	0.00	0.00	0.00	0.00	1.00	0.00
Ethanol	kg/hr	47	47	47	43	5	2,335	24,032	668				24,825	793		
Water	kg/hr	335,811	335,811	339,188	305,269	33,919	33,881	338,544	710			6,255	374,828	36,284	9,490	9,490
Glucose (SS)	kg/hr	2,432	2,432	31,193	28,074	3,119	103	82					82			
Xylose (SS)	kg/hr	18,087	18,087	18,087	16,279	1,809	156	909					909			
Arabinose (SS)	kg/hr	2,528	2,528	2,528	2,275	253	32	217					217			
Other Sugars (SS)	kg/hr	2,962	2,962	2,962	2,666	296	37	254					254			
Cellobiose (SS)	kg/hr	312	312	360	324	36	36	360					360			
Glucose Oligomers (SS)	kg/hr	716	716	1,853	1,668	185	185	1,853					1,853			
Xylose Oligomers (SS)	kg/hr	646	646	646	581	65	65	646					646			
Other Oligomers (SS)	kg/hr	969	969	969	872	97	97	969					969			
Corn Steep Liquor (SS)	kg/hr	270	270	270	243	27	224	1,456	3		1,087		1,459	4		
Others (Soluble Solids)	kg/hr	9,581	9,581	9,581	8,623	958	958	9,581					9,581			
Acetic Acid	kg/hr	4,477	4,477	4,477	4,029	448	527	5,251	6				5,258	7		
Sulfuric Acid	kg/hr	154	154	154	139	15	15	154	0				154	0		
Furfural	kg/hr	576	576	576	518	58	57	568	7				576	8		
HMF	kg/hr	90	90	90	81	9	9	89	1				90	1		
Carbon Dioxide	kg/hr	29	29	29	26	3	40	406	20,799				440	34		
Methane	kg/hr															
Oxygen	kg/hr	0	0	0	0	0	0	0	226				0	0		
Nitrogen	kg/hr	0	0	0	0	0	0	0	0				0	0		
Others	kg/hr	954	954	954	859	95	292	4,276	0	136			4,276	0		
Cellulose (IS)	kg/hr	28,432	28,432	1,365	1,228	136	136	1,365					1,365			
Xylan (IS)	kg/hr	439	439	439	395	44	44	439					439			
Arabinan (IS)	kg/hr	61	61	61	55	6	6	61					61			
Other Sugar Polymers (IS)	kg/hr	73	73	73	66	7	7	73					73			
Cellulase (IS)	kg/hr	81	81	650	585	65	65	650				568	650			
Biomass (IS)	kg/hr	0	0	0	0	0	0	0					0			
Zymo (IS)	kg/hr	136	136	136	122	14	193	1,088					1,088			
Lignin (IS)	kg/hr	14,252	14,252	14,252	12,827	1,425	1,425	14,252					14,252			
Gypsum (IS)	kg/hr	28	28	28	25	3	3	28					28			
Ca(OH)2 (IS)	kg/hr															
Others (Insoluble Solids)	kg/hr	4,620	4,620	4,620	4,158	462	462	4,620					4,620			
Enthalpy Flow (millions)	Kcal/hr	-1389.4	-1384.5	-1408.7	-1275.5	-141.7	-137.7	-1372.7	-47.5	-0.4	-4.1	-24.2	-1510.9	-138.2	-29.8	-34.7
Average Density	g/ml	1.072	1.059	1.052	1.075	1.075	1.018	1.015	0.002	1.010	0.998	1.040	0.952	0.975	0.002	0.865

Heat Stream No.	MM kcal/hr		Work Stream No.	kW
QF300A	0.09		WP300	345.20
QF300	2.40		WP306	119.04
QH301	-4.89		WP310	122.90
QH302	8.49		WT300	438.73
			WT306	113.64
			WT310	445.89

Eq. No.	Equipment Name	Req	Spare	Equipment Type	Mat Const.
A-300	Ethanol Fermentor Agitator	10		FIXED-PROP	SS304
A-306	Beer Surge Tank Agitator	2		FIXED-PROP	SS304
A-310	Saccharification Tank Agitator	10		FIXED-PROP	SS304
F-300	Ethanol Fermentor	5		FLAT-BTM-STORAG	SS304
H-300	Fermentation Cooler	5	1	PLATE-FRAME	SS304
H-301	Hydrolyzate Heater	1	1	PLATE-FRAME	SS
H-302	Saccharified Slurry Cooler	3		PLATE-FRAME	SS304
H-310	Fermentation Cooler	5	1	PLATE-FRAME	SS304
P-300	Fermentation Recirc/Transfer Pump	5	1	CENTRIFUGAL	SS304
P-306	Beer Transfer Pump	1	1	CENTRIFUGAL	SS304
P-310	Saccharification Recirc/Transfer Pur	5	1	CENTRIFUGAL	SS304
T-306	Beer Storage Tank	1		FLAT-BTM-STORAG	SS304
T-310	Saccharification Tank	5		FLAT-BTM-STORAG	SS304

VER	DESCRIPTION	DATE
A	BDF PROCESS CASE	1/3/02
B	2002 ICBRA REPORT	6/28/02

NREL NATIONAL RENEWABLE ENERGY LABORATORY
Biotechnology Center For Fuels And Chemicals

SECTION A300
SACCHARIFICATION & FERMENTATION

10203I.xls | PFD-P110-A302 | B

4 6/28/02

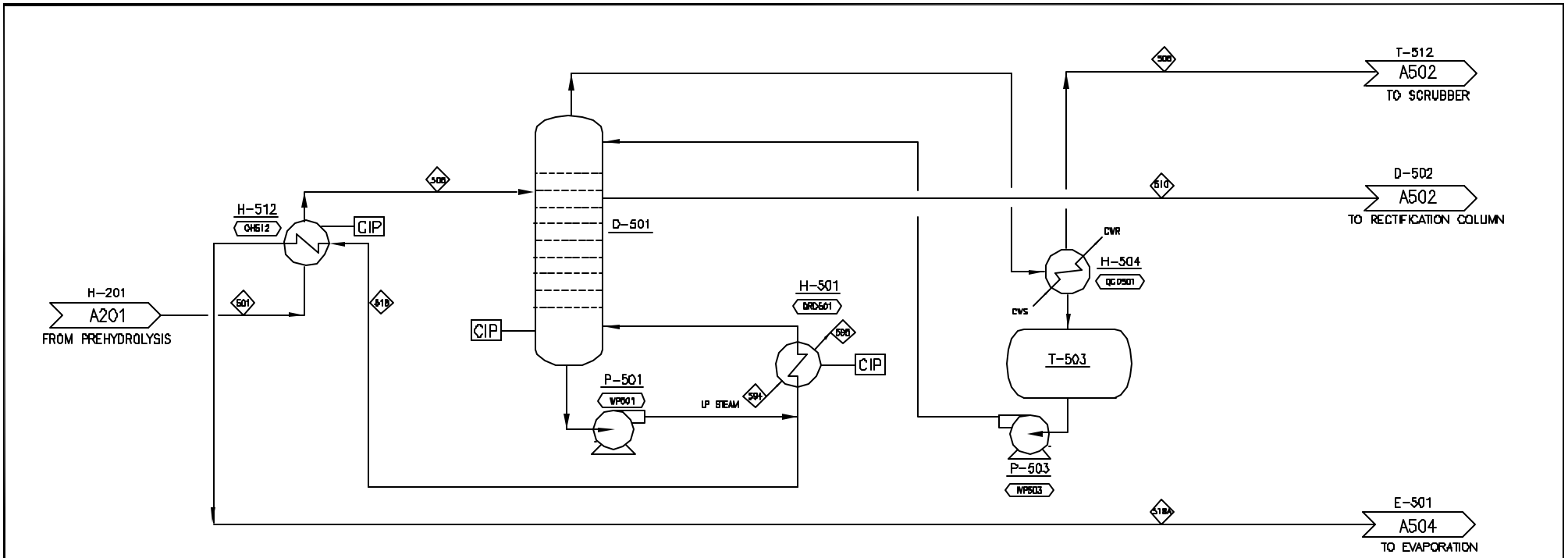

COMPONENT	UNITS	501	506	508	510	518	518A	594	595
Total Flow	kg/hr	449,353	449,353	491	62,329	386,533	386,533	65,505	65,505
Insoluble Solids	%	5.0%	5.0%	0.0%	0.0%	5.8%	5.8%	0.0%	0.0%
Soluble Solids	%	3.6%	3.6%	0.0%	0.2%	4.2%	4.2%	0.0%	0.0%
Temperature	C	95	100	60	113	123	117	164	148
Pressure	atm	4.00	4.76	1.86	1.91	2.10	2.10	4.42	4.42
Vapor Fraction		0.00	0.00	1.00	1.00	0.00	0.00	1.00	0.00
Ethanol	kg/hr	24,825	24,825	60	24,583	182	182		
Water	kg/hr	374,828	374,828	20	36,990	337,819	337,819	65,505	65,505
Glucose (SS)	kg/hr	82	82	0	0	82	82		
Xylose (SS)	kg/hr	909	909	0	0	909	909		
Arabinose (SS)	kg/hr	217	217	0	0	217	217		
Other Sugars (SS)	kg/hr	254	254	0	0	254	254		
Cellobiose (SS)	kg/hr	360	360	0	0	360	360		
Glucose Oligomers (SS)	kg/hr	1,853	1,853	0	0	1,853	1,853		
Xylose Oligomers (SS)	kg/hr	646	646	0	0	646	646		
Other Oligomers (SS)	kg/hr	969	969	0	0	969	969		
Corn Steep Liquor (SS)	kg/hr	1,459	1,459	0	145	1,314	1,314		
Others (Soluble Solids)	kg/hr	9,581	9,581	0	0	9,581	9,581		
Acetic Acid	kg/hr	5,258	5,258	0	259	4,998	4,998		
Sulfuric Acid	kg/hr	154	154	0	0	154	154		
Furfural	kg/hr	576	576	0	278	298	298		
HMF	kg/hr	90	90	0	43	46	46		
Carbon Dioxide	kg/hr	440	440	411	29				
Methane	kg/hr								
Oxygen	kg/hr	0	0	0	0	0	0		
Nitrogen	kg/hr	0	0	0	0				
Others	kg/hr	4,276	4,276	0	1	4,275	4,275		
Cellulose (IS)	kg/hr	1,365	1,365			1,365	1,365		
Xylan (IS)	kg/hr	439	439			439	439		
Arabinan (IS)	kg/hr	61	61			61	61		
Other Sugar Polymers (IS)	kg/hr	73	73			73	73		
Cellulase (IS)	kg/hr	650	650			650	650		
Biomass (IS)	kg/hr	0	0			0	0		
Zymo (IS)	kg/hr	1,088	1,088			1,088	1,088		
Lignin (IS)	kg/hr	14,252	14,252			14,252	14,252		
Gypsum (IS)	kg/hr	28	28			28	28		
Ca(OH)2 (IS)	kg/hr								
Others (Insoluble Solids)	kg/hr	4,620	4,620			4,620	4,620		
Enthalpy Flow (millions)	Kcal/hr	-1488.8	-1486.6	-1.0	-147.3	-1304.9	-1307.1	-205.9	-239.7
Average Density	g/ml	0.9585	0.9534	0.0029	0.0014	0.9513	0.9570	0.0022	0.8653

Heat Stream No.	MM kcal/hr		Work Stream No.	kW
QCD501	0.37		WP501	312.41
QH512	-2.18		WP503	0.51
QRD501	-33.76			

Eq. No.	Equipment Name	Req.	Spare	Equipment Type	Mat Const.
D-501	Beer Column	1		DISTILLATION	SS304
H-501	Beer Column Reboiler	1	1	SHELL-TUBE	SS304;CS
H-504	Beer Column Condenser	1		SHELL-TUBE	SS304;CS
H-512	Beer Column Feed Interchanger	1	1	PLATE-FRAME	SS
P-501	Beer Column Bottoms Pump	1	1	CENTRIFUGAL	SS
P-503	Beer Column Reflux Pump	1	1	CENTRIFUGAL	SS
T-503	Beer Column Reflux Drum	1		HORIZONTAL-VESS	SS304

VER	DESCRIPTION	DATE
A	ISP PROCESS CASE	1/3/03
B	2002 DESIGN REPORT	3/22/02
		3/22/02

NATIONAL RENEWABLE ENERGY LABORATORY
Biotechnology Center For Fuels And Chemicals

SECTION A500
BEER DISTILLATION

10203I.xls | PFD-P110-A501 | B

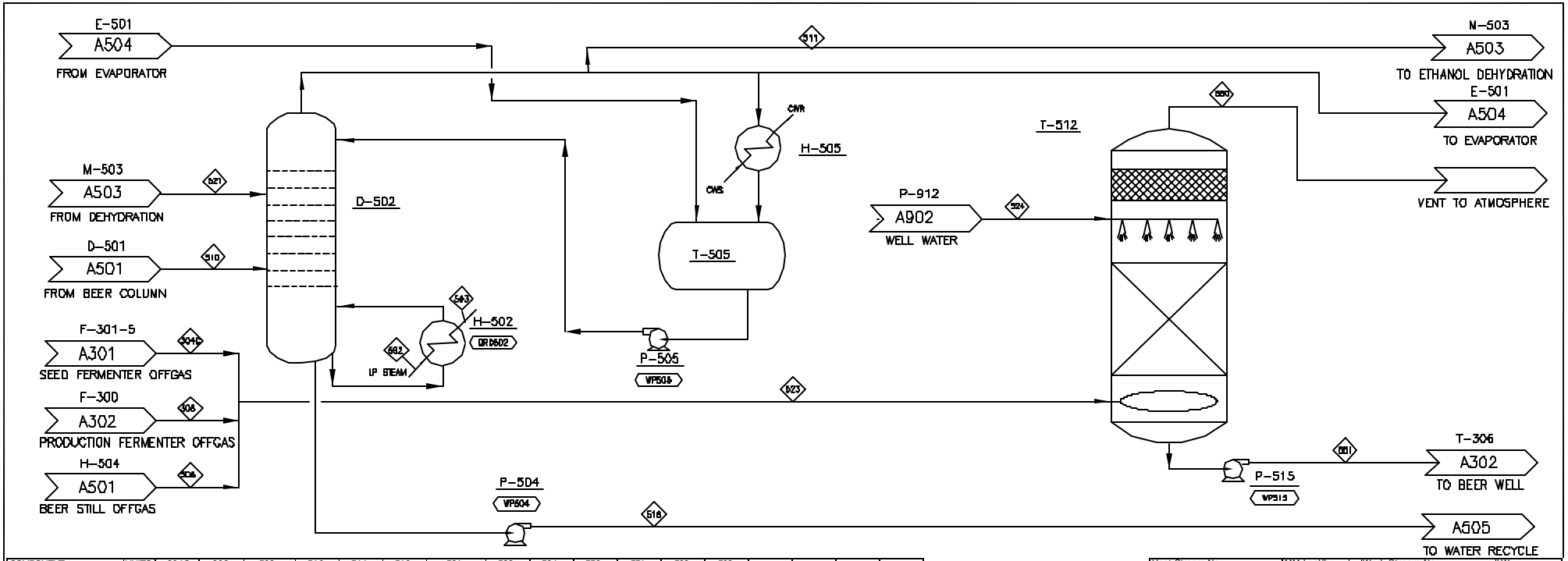

COMPONENT	UNITS	304C	308	508	510	511	516	521	523	524	550	551	592	593
Total Flow	kg/hr	2,415	22,420	491	62,329	33,232	37,643	8,546	25,325	35,912	24,107	37,130	8,164	8,164
Insoluble Solids	%	0.0%	0.0%	0.0%	0.0%	0.0%	0.0%	0.0%	0.0%	0.0%	0.0%	0.0%	0.0%	0.0%
Soluble Solids	%	0.0%	0.0%	0.0%	0.2%	0.0%	0.4%	0.0%	0.0%	0.0%	0.0%	0.0%	0.0%	0.0%
Temperature	C	41	41	60	113	92	121	70	41	26	29	39	164	148
Pressure	atm	1.00	1.00	1.86	1.91	1.70	4.29	1.53	1.00	1.00	0.90	0.90	4.42	4.42
Vapor Fraction		1.00	1.00	1.00	1.00	1.00	0.00	0.00	1.00	0.00	1.00	0.00	1.00	0.00
Ethanol	kg/hr	70	668	60	24,583	30,740	19	6,176	797		4	793		
Water	kg/hr	76	710	20	36,990	2,492	36,868	2,370	806	35,912	434	36,284	8,164	8,164
Glucose (SS)	kg/hr			0	0				0					
Xylose (SS)	kg/hr			0	0		0		0					
Arabinose (SS)	kg/hr			0	0		0		0					
Other Sugars (SS)	kg/hr			0	0				0					
Cellobiose (SS)	kg/hr			0	0				0					
Glucose Oligomers (SS)	kg/hr			0	0				0					
Xylose Oligomers (SS)	kg/hr			0	0		0		0					
Other Oligomers (SS)	kg/hr			0	0				0					
Corn Steep Liquor (SS)	kg/hr	0	3	0	145		145		4		0	4		
Others (Soluble Solids)	kg/hr			0	0				0					
Acetic Acid	kg/hr	1	6	0	259		259		7		0	7		
Sulfuric Acid	kg/hr	0	0	0	0		0		0		0	0		
Furfural	kg/hr	1	7	0	278		278		8		0	8		
HMF	kg/hr	0	1	0	43		43		1		0	1		
Carbon Dioxide	kg/hr	2,235	20,799	411	29		29		23,444		23,410	34		
Methane	kg/hr													
Oxygen	kg/hr	32	226	0	0		0		258		258	0		
Nitrogen	kg/hr	0	0	0	0		0		0		0	0		
Others	kg/hr	0	0	0	1		1		0		0	0		
Cellulose (IS)	kg/hr													
Xylan (IS)	kg/hr													
Arabinan (IS)	kg/hr													
Other Sugar Polymers (IS)	kg/hr													
Cellulase (IS)	kg/hr													
Biomass (IS)	kg/hr													
Zymo (IS)	kg/hr													
Lignin (IS)	kg/hr													
Gypsum (IS)	kg/hr													
Ca(OH)2 (IS)	kg/hr													
Others (Insoluble Solids)	kg/hr													
Enthalpy Flow (millions)	Kcal/hr	-5.1	-47.5	-1.0	-147.3	-44.6	-137.3	-17.5	-53.6	-136.0	-51.4	-138.2	-25.7	-29.9
Average Density	g/ml	0.0016	0.0016	0.0029	0.0014	0.0023	0.8964	0.7943	0.0016	0.9925	0.0016	0.9750	0.0022	0.8653

Heat Stream No.	MM kcal/hr	Work Stream No.	kW
QRD502	-4.21	WP504	9.31
		WP505	12.77
		WP515	6.10

Eq. No.	Equipment Name	Req.	Spare	Equipment Type	Mat Const.
D-502	Rectification Column	1		DISTILLATION	SS
H-502	Rectification Column Reboiler	1		SHELL-TUBE	SS304;CS
H-505	Start-up Rect. Column Condenser	1		SHELL-TUBE	SS304;CS
P-504	Rectification Column Bottoms Pump	1	1	CENTRIFUGAL	SS
P-505	Rectification Column Reflux Pump	1	1	CENTRIFUGAL	SS
P-515	Scrubber Bottoms Pump	1		CENTRIFUGAL	SS
T-505	Rectification Column Reflux Drum	1		HORIZONTAL-VESS	SS304
T-512	Vent Scrubber	1		ABSORBER	SS304;PLASTIC

VER	DESCRIPTION	DATE
A	ASP PROCESS CASE	1/2/03
B	2002 DESIGN REPORT	5/22/03

NREL NATIONAL RENEWABLE ENERGY LABORATORY
Biotechnology Center For Fuels And Chemicals

SECTION A500
RECTIFICATION DISTILLATION

10203l.xls | PFD-P110-A502 | B

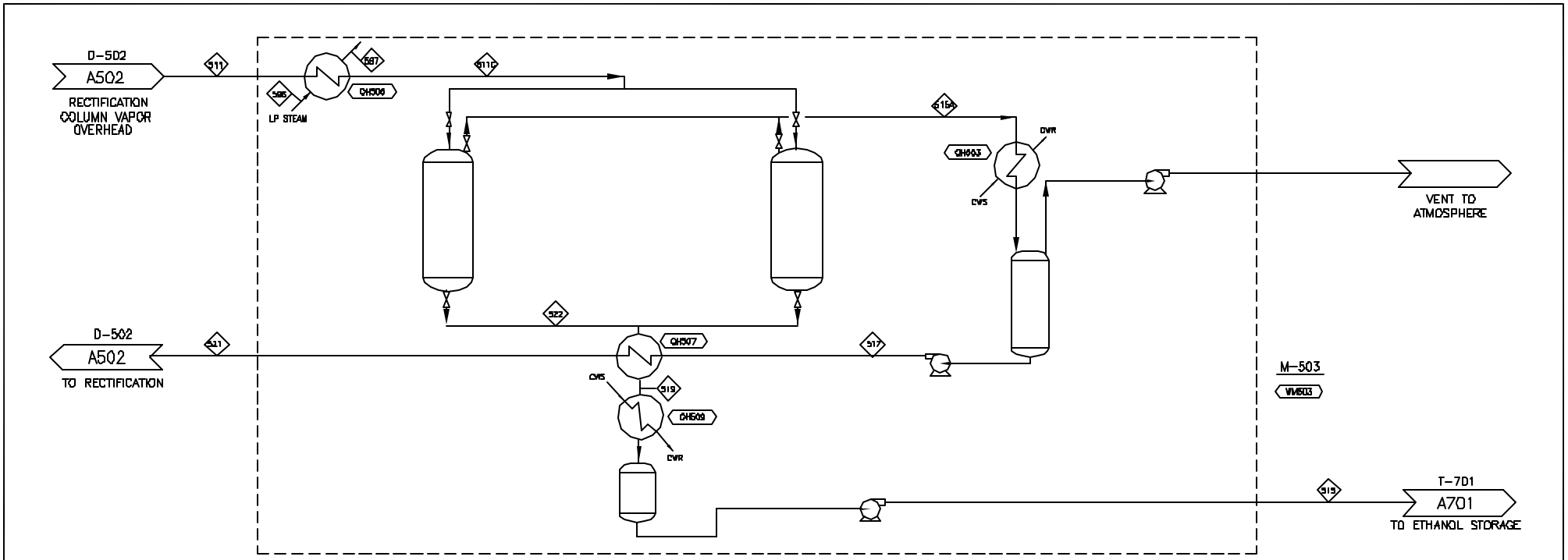

COMPONENT	UNITS	511	511C	515	515A	517	519	521	522	596	597
Total Flow	kg/hr	33,232	33,232	24,686	8,546	8,546	24,686	8,546	8,546	621	621
Insoluble Solids	%	0.0%	0.0%	0.0%	0.0%	0.0%	0.0%	0.0%	0.0%	0.0%	0.0%
Soluble Solids	%	0.0%	0.0%	0.0%	0.0%	0.0%	0.0%	0.0%	0.0%	0.0%	0.0%
Temperature	C	92	116	38	116	35	92	70	70	164	148
Pressure	atm	1.70	1.70	1.00	1.70	0.14	1.44	1.53	1.53	4.42	4.42
Vapor Fraction		1.00	1.00	0.00	1.00	0.00	1.00	0.00	0.00	1.00	0.00
Ethanol	kg/hr	30,740	30,740	24,564	6,176	6,176	24,564	6,176	6,176		
Water	kg/hr	2,492	2,492	122	2,370	2,370	122	2,370	2,370	621	621
Glucose (SS)	kg/hr										
Xylose (SS)	kg/hr										
Arabinose (SS)	kg/hr										
Other Sugars (SS)	kg/hr										
Cellobiose (SS)	kg/hr										
Glucose Oligomers (SS)	kg/hr										
Xylose Oligomers (SS)	kg/hr										
Other Oligomers (SS)	kg/hr										
Corn Steep Liquor (SS)	kg/hr										
Others (Soluble Solids)	kg/hr										
Acetic Acid	kg/hr										
Sulfuric Acid	kg/hr										
Furfural	kg/hr										
HMF	kg/hr										
Carbon Dioxide	kg/hr										
Methane	kg/hr										
Oxygen	kg/hr										
Nitrogen	kg/hr										
Others	kg/hr										
Cellulose (IS)	kg/hr										
Xylan (IS)	kg/hr										
Arabinan (IS)	kg/hr										
Other Sugar Polymers (IS)	kg/hr										
Cellulase (IS)	kg/hr										
Biomass (IS)	kg/hr										
Zymo (IS)	kg/hr										
Lignin (IS)	kg/hr										
Gypsum (IS)	kg/hr										
Ca(OH)2 (IS)	kg/hr										
Others (Insoluble Solids)	kg/hr										
Enthalpy Flow (millions)	Kcal/hr	-44.6	-44.3	-35.6	-14.8	-17.8	-29.7	-17.5	-17.5	-2.0	-2.3
Average Density	g/ml	0.0023	0.0022	0.7753	0.0017	0.8308	0.0022	0.7943	0.7943	0.0022	0.8653

Heat Stream No.	MM kcal/hr	Work Stream No.	kW
QH503	2.96	WM503	171.59
QH506	-0.32		
QH507	0.24		
QH509	5.86		

Eq. No.	Equipment Name	Req	Spare	Equipment Type	Mat Const.
M-503	Molecular Sieve (9 pieces)	1		PACKAGE	SS

VER	DESCRIPTION	DATE
A	BIP PROCESS CASE	1/3/02
B	2002 DESIGN REPORT	5/29/02
		3/22/03

NATIONAL RENEWABLE ENERGY LABORATORY
Biotechnology Center For Fuels And Chemicals

SECTION A500
ETHANOL DEHYDRATION

10203I.xls | PFD-P110-A503 | B

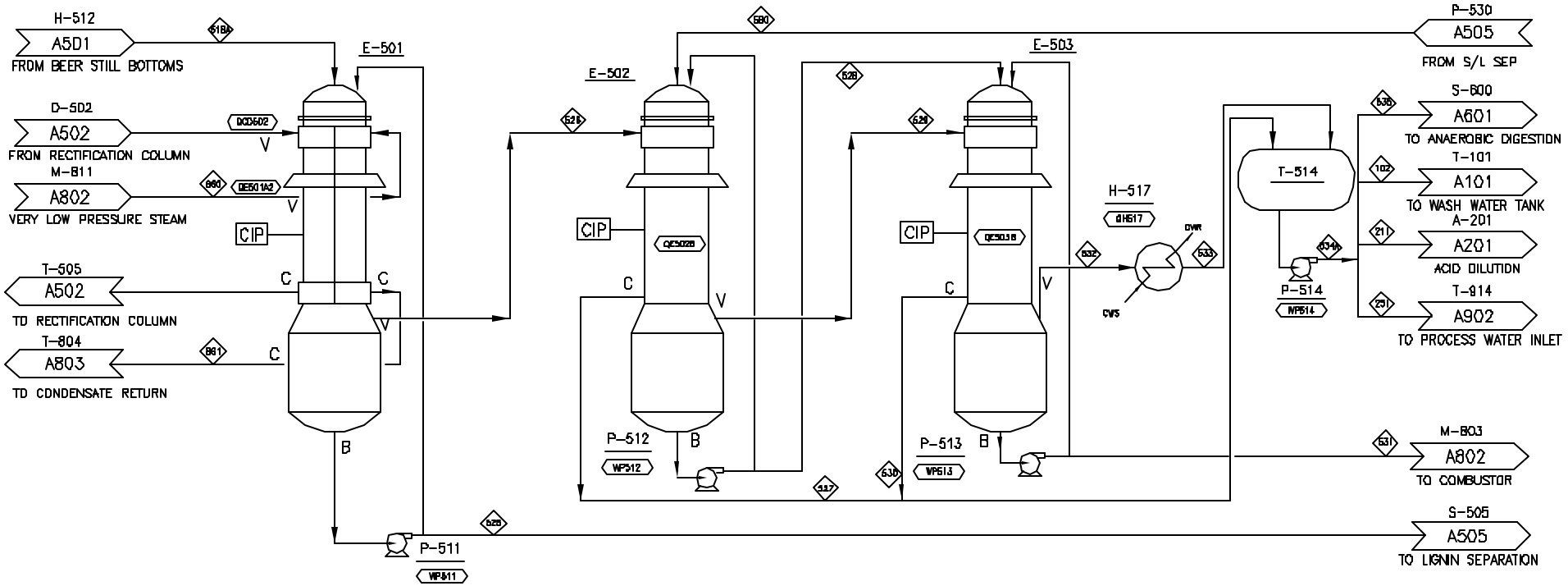

COMPONENT	UNITS	102	211	251	518A	525	526	527	528	529	530	531	532	533	534A	535	580	860	861
Total Flow	kg/hr	43,017	99,344	71,466	386,533	303,646	82,887	82,887	116,868	77,752	77,752	39,922	76,946	76,946	237,585	23,759	194,620	4,858	4,858
Insoluble Solids	%	0.0%	0.0%	0.0%	5.8%	7.4%	0.0%	0.0%	8.8%	0.0%	0.0%	2.4%	0.0%	0.0%	0.0%	0.0%	0.5%	0.0%	0.0%
Soluble Solids	%	0.1%	0.1%	0.1%	4.2%	5.2%	0.4%	0.4%	8.8%	0.0%	0.0%	25.8%	0.0%	0.0%	0.1%	0.1%	5.3%	0.0%	0.0%
Temperature	C	74	74	74	117	87	87	87	71	71	71	64	64	64	74	74	40	115	115
Pressure	atm	3.00	3.00	3.00	2.10	0.60	0.60	0.61	0.31	0.31	0.32	0.21	0.21	0.23	2.00	1.00	3.20	1.68	1.68
Vapor Fraction		0.00	0.00	0.00	0.00	0.00	1.00	0.00	0.00	1.00	0.00	0.00	1.00	0.00	0.00	0.00	0.00	0.97	0.00
Ethanol	kg/hr	31	71	51	182	39	143	143	3	24	24	0	2	2	170	17	27		
Water	kg/hr	42,546	98,256	70,684	337,819	255,932	81,887	81,887	99,813	77,243	77,243	23,957	75,856	75,856	234,985	23,499	177,056	4,858	4,858
Glucose (SS)	kg/hr				82	82			57			57					57		
Xylose (SS)	kg/hr	0	0	0	909	909	0	0	629	0	0	629	0	0	0	0	629		
Arabinose (SS)	kg/hr	0	0	0	217	217	0	0	150			150			0	0	150		
Other Sugars (SS)	kg/hr				254	254			176			176					176		
Cellobiose (SS)	kg/hr				360	360			249			249					249		
Glucose Oligomers (SS)	kg/hr				1,853	1,853			1,282			1,282					1,282		
Xylose Oligomers (SS)	kg/hr	0	0	0	646	646	0	0	447	0	0	447	0	0	0	0	447		
Other Oligomers (SS)	kg/hr				969	969			670			670					670		
Corn Steep Liquor (SS)	kg/hr	58	133	96	1,314	996	319	319							319	32			
Others (Soluble Solids)	kg/hr				9,581	9,581			6,628			6,628					6,628		
Acetic Acid	kg/hr	325	751	540	4,998	4,689	309	309	2,827	418	418	1,757	1,070	1,070	1,796	180	3,244		
Sulfuric Acid	kg/hr	0	0	0	154	154	0	0	107	0	0	107	0	0	0	0	107		
Furfural	kg/hr	48	111	80	298	100	197	197	13	56	56	2	12	12	265	27	69		
HMF	kg/hr	7	17	12	46	16	31	31	2	9	9	0	2	2	41	4	11		
Carbon Dioxide	kg/hr																		
Methane	kg/hr																		
Oxygen	kg/hr				0														
Nitrogen	kg/hr																		
Others	kg/hr	2	4	3	4,275	4,273	2	2	2,852	2	2	2,847	5	5	9	1	2,854		
Cellulose (IS)	kg/hr				1,365	1,365			20			20					20		
Xylan (IS)	kg/hr				439	439			7			7					7		
Arabinan (IS)	kg/hr				61	61			1			1					1		
Other Sugar Polymers (IS)	kg/hr				73	73			1			1					1		
Cellulase (IS)	kg/hr				650	650			244			244					244		
Biomass (IS)	kg/hr				0	0			0			0					0		
Zymo (IS)	kg/hr				1,088	1,088			408			408					408		
Lignin (IS)	kg/hr				14,252	14,252			214			214					214		
Gypsum (IS)	kg/hr				28	28			0			0					0		
Ca(OH)2 (IS)	kg/hr																		
Others (Insoluble Solids)	kg/hr				4,620	4,620			69			69					69		
Enthalpy Flow (millions)	Kcal/hr	-160.0	-369.5	-265.8	-1307.1	-1018.2	-262.3	-307.3	-374.4	-247.0	-290.0	-88.4	-243.9	-286.5	-883.7	-88.4	-665.5	-15.5	-18.0
Average Density	g/ml	0.944	0.944	0.944	0.957	1.003	0.000	0.932	0.983	0.000	0.948	1.085	0.000	0.954	0.944	0.944	0.999	0.001	0.947

Stream No.	MM kcal/hr		Stream No.	kW
QCD502	24.58		WP511	198.53
QE501A2	2.49		WP512	55.37
QE502B	44.05		WP513	23.68
QE503B	42.11		WP514	40.33
QH517	42.58			

Eq. No.	Equipment Name	Req	Spare	Equipment Type	Mat Const.
E-501	1st Effect Evaporation	2		SHELL-TUBE	SS316
E-502	2nd Effect Evaporation	1		SHELL-TUBE	SS316
E-503	3rd Effect Evaporation	2		SHELL-TUBE	SS316
H-517	Evaporator Condenser	1	1	SHELL-TUBE	SS304;CS
P-511	1st Effect Pump	2	1	CENTRIFUGAL	SS
P-512	2nd Effect Pump	1	1	CENTRIFUGAL	SS
P-513	3rd Effect Pump	2	1	CENTRIFUGAL	SS
P-514	Evaporator Condensate Pump	1	1	CENTRIFUGAL	SS304
T-514	Evaporator Condensate Drum	1		HORIZONTAL-VESSE	SS304

VER	DESCRIPTION	DATE
A	ESP PROCESS BASE	1/2/02
B	2002 DESIGN REPORT	6/23/02

NREL NATIONAL RENEWABLE ENERGY LABORATORY
Biotechnology Center For Fuels And Chemicals

SECTION A500
EVAPORATION

10203I.xls | PFD-P110-A504 | B

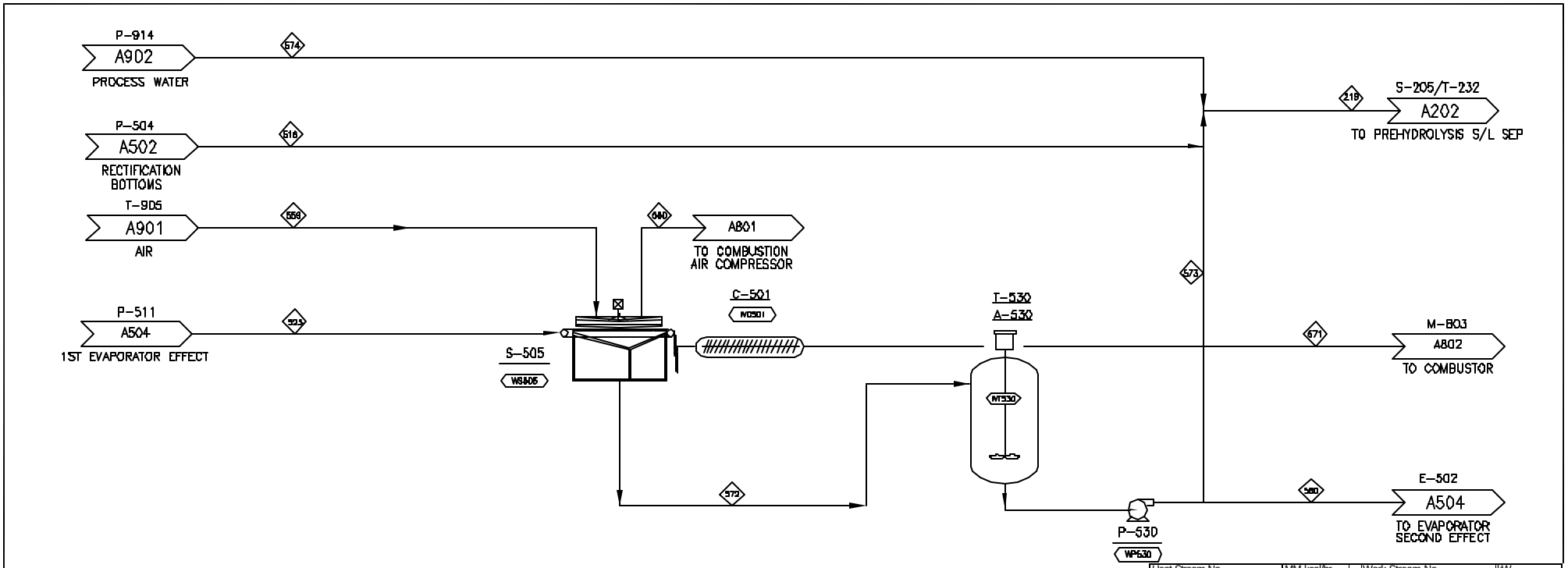

COMPONENT	UNITS	219	516	525	559	571	572	573	574	560	580
Total Flow	kg/hr	207,096	37,643	303,646	5,921	44,075	259,493	64,873	104,579	5,999	194,620
Insoluble Solids	%	0.2%	0.0%	7.4%	0.0%	48.3%	0.5%	0.5%	0.0%	0.0%	0.5%
Soluble Solids	%	1.7%	0.4%	5.2%	0.0%	4.9%	5.3%	5.3%	0.0%	0.1%	5.3%
Temperature	C	46	121	87	40	38	40	40	20	38	40
Pressure	atm	1.00	4.29	0.60	9.51	3.20	3.20	3.20	1.00	3.20	3.20
Vapor Fraction		0.00	0.00	0.00	1.00	0.00	0.00	0.00	0.00	1.00	0.00
Ethanol	kg/hr	28	19	39		3	36	9		0	27
Water	kg/hr	200,466	36,868	255,932		19,783	236,075	59,019	104,579	74	177,056
Glucose (SS)	kg/hr	19		82		6	76	19			57
Xylose (SS)	kg/hr	210	0	909		70	838	210			629
Arabinose (SS)	kg/hr	50	0	217		17	200	50			150
Other Sugars (SS)	kg/hr	59		254		20	235	59			176
Cellobiose (SS)	kg/hr	83		360		28	332	83			249
Glucose Oligomers (SS)	kg/hr	427		1,853		144	1,709	427			1,282
Xylose Oligomers (SS)	kg/hr	149	0	646		50	596	149			447
Other Oligomers (SS)	kg/hr	223		969		75	894	223			670
Corn Steep Liquor (SS)	kg/hr	145	145	996		992				4	
Others (Soluble Solids)	kg/hr	2,209		9,581		743	8,838	2,209			6,628
Acetic Acid	kg/hr	1,341	259	4,689		363	4,326	1,081		1	3,244
Sulfuric Acid	kg/hr	36	0	154		12	142	36		0	107
Furfural	kg/hr	301	278	100		8	93	23		0	69
HMF	kg/hr	47	43	16		1	14	4		0	11
Carbon Dioxide	kg/hr	29	29								
Methane	kg/hr										
Oxygen	kg/hr	0	0		1,243	0				1,243	
Nitrogen	kg/hr	0	0		4,678	1				4,677	
Others	kg/hr	952	1	4,273		468	3,805	951		0	2,854
Cellulose (IS)	kg/hr	7		1,365		1,337	27	7			20
Xylan (IS)	kg/hr	2		439		430	9	2			7
Arabinan (IS)	kg/hr	0		61		60	1	0			1
Other Sugar Polymers (IS)	kg/hr	0		73		72	1	0			1
Cellulase (IS)	kg/hr	81		650		325	325	81			244
Biomass (IS)	kg/hr	0		0		0	0	0			0
Zymo (IS)	kg/hr	136		1,088		544	544	136			408
Lignin (IS)	kg/hr	71		14,252		13,967	285	71			214
Gypsum (IS)	kg/hr	0		28		27	1	0			0
Ca(OH)2 (IS)	kg/hr										
Others (Insoluble Solids)	kg/hr	23		4,620		4,528	92	23			69
Enthalpy Flow (millions)	Kcal/hr	-755.7	-137.3	-1018.2	0.0	-136.2	-887.3	-221.8	-396.6	-0.2	-665.5
Average Density	g/ml	0.9793	0.8964	1.0034	0.0106	1.3326	0.9990	0.9990	0.9983	0.0036	0.9990

Heat Stream No.	MM kcal/hr	Work Stream No.	kW
		WC501	28.16
		WP530	59.41
		WS505	113.91
		WT530	6.83

Eq. No.	Equipment Name	Req	Spare	Equipment Type	Mat Const.
A-530	Recycled Water Tank Agitator	1		FIXED-PROP	CS
C-501	Lignin Wet Cake Screw	1		SCREW	CS
P-530	Recycled Water Pump	1	1	CENTRIFUGAL	CS
S-505	Pneumapress Filter	4		PNEUMAPRESS	SS316
T-530	Recycled Water Tank	1		FLAT-BTM-STORAG	CS

VER	DESCRIPTION	DATE
A	BIP PROGRESS CHECK	1/3/02
B	2002 DESIGN REPORT	5/23/02
		6/22/09

NREL NATIONAL RENEWABLE ENERGY LABORATORY
Biotechnology Center For Fuels And Chemicals

SECTION A500
LIGNIN SEPARATION & RECYCLE

10203Lxls | PFD-P110-A505 | B

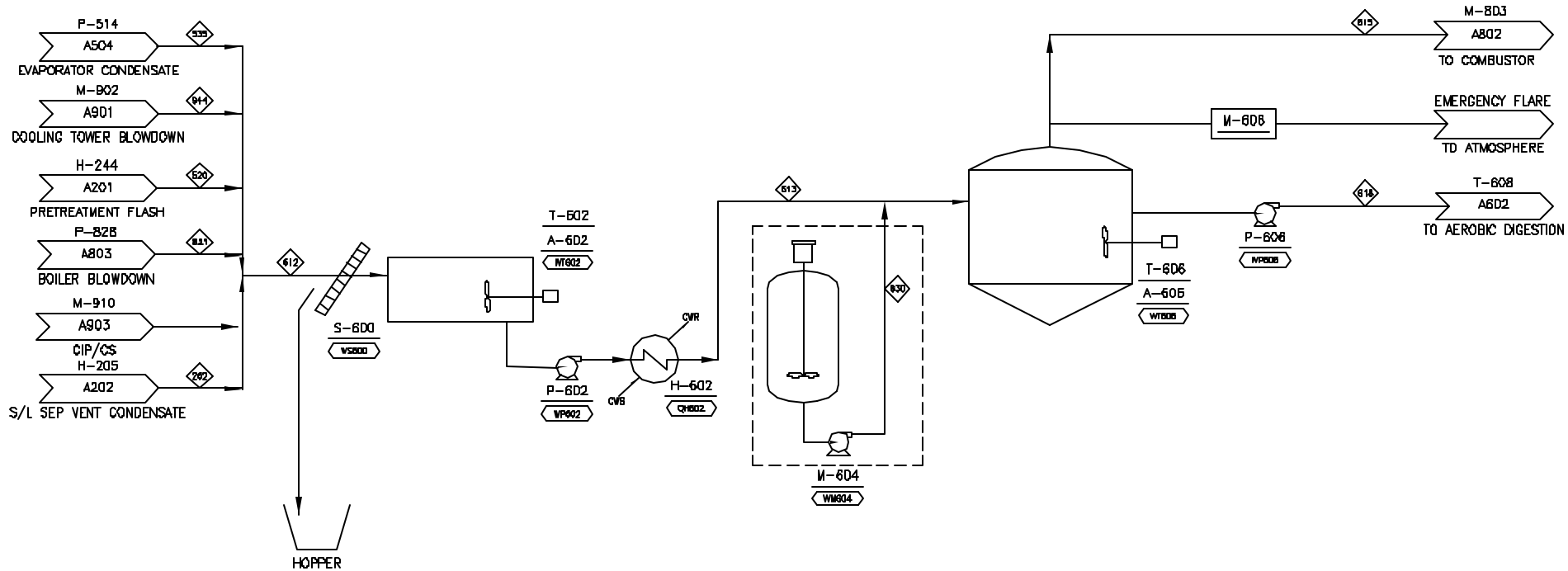

COMPONENT	UNITS	262	520	535	612	613	615	618	630	821	944
Total Flow	kg/hr	200	53,152	23,759	97,264	97,264	625	96,697	58	5,715	14,439
Insoluble Solids	%	0.0%	0.0%	0.0%	0.0%	0.0%	0.0%	0.0%	0.0%	0.0%	0.0%
Soluble Solids	%	0.0%	0.1%	0.1%	0.1%	0.1%	0.0%	0.1%	0.0%	0.0%	0.0%
Temperature	C	38	30	74	59	35	35	35	20	309	28
Pressure	atm	1.00	1.00	1.00	2.00	2.00	1.00	1.00	1.00	96.26	1.00
Vapor Fraction		0.00	0.00	0.00	0.00	0.00	1.00	0.00	0.00	0.00	0.00
Ethanol	kg/hr	0	73	17	90	90	0	6			
Water	kg/hr	199	52,244	23,499	96,094	96,094	28	96,414		5,715	14,439
Glucose (SS)	kg/hr										
Xylose (SS)	kg/hr		0	0	0	0		0			
Arabinose (SS)	kg/hr		0	0	0	0		0			
Other Sugars (SS)	kg/hr										
Cellobiose (SS)	kg/hr										
Glucose Oligomers (SS)	kg/hr										
Xylose Oligomers (SS)	kg/hr		0	0	0	0					
Other Oligomers (SS)	kg/hr										
Corn Steep Liquor (SS)	kg/hr	0	48	32	80	80	0	80			
Others (Soluble Solids)	kg/hr										
Acetic Acid	kg/hr	1	268	180	449	449	0	31			
Sulfuric Acid	kg/hr	0	0	0	0	0					
Furfural	kg/hr	0	449	27	476	476	0	33			
HMF	kg/hr	0	70	4	74	74	0	5			
Carbon Dioxide	kg/hr						273	25			
Methane	kg/hr						324	1			
Oxygen	kg/hr	0			0	0	0	0			
Nitrogen	kg/hr	0			0	0	0	0			
Others	kg/hr	0	0	1	1	1	0	58	58		
Cellulose (IS)	kg/hr										
Xylan (IS)	kg/hr										
Arabinan (IS)	kg/hr										
Other Sugar Polymers (IS)	kg/hr										
Cellulase (IS)	kg/hr										
Biomass (IS)	kg/hr							43			
Zymo (IS)	kg/hr										
Lignin (IS)	kg/hr										
Gypsum (IS)	kg/hr										
Ca(OH)2 (IS)	kg/hr										
Others (Insoluble Solids)	kg/hr										
Enthalpy Flow (millions)	Kcal/hr	-0.8	-198.6	-88.4	-362.3	-364.6	-1.0	-365.0	-0.2	-19.9	-54.6
Average Density	g/ml	0.9808	0.9903	0.9442	0.9604	0.9846	0.0009	0.9841	0.9983	0.6925	0.9906

Heat Stream No.	MM kcal/hr	Work Stream No.	kW
QH602	2.26	WM604	4.14
		WP602	22.57
		WP606	22.45
		WS600	0.42
		WT602	14.37
		WT606	31.06

Eq. No.	Equipment Name	Req.	Spare	Equipment Type	Mat Const.
A-602	Equalization Basin Agitator	1		FIXED-PROP	SS
A-606	Anaerobic Agitator	1		FIXED-PROP	SS
H-602	Anaerobic Digestor Feed Cooler	1		SHELL-TUBE	SS316;CS
M-604	Nutrient Feed System	1		PACKAGE	CS
M-606	Biogas Emergency Flare	1		MISCELLANEOUS	SS
P-602	Anaerobic Reactor Feed Pump	1	1	CENTRIFUGAL	CS
P-606	Aerobic Digestor Feed Pump	1	1	CENTRIFUGAL	CS
S-600	Bar Screen	1		SCREEN	CS
T-602	Equalization Basin	1		FLAT-BTM-STORAG	CONCRETE
T-606	Anaerobic Digestor	1		FLAT-BTM-STORAG	EPOXY-LINED

REV	DESCRIPTION	DATE
A	ISP PROGRESS CHKR	1/3/02
B	2002 DESIGN REPORT	5/22/02

NREL NATIONAL RENEWABLE ENERGY LABORATORY
Biotechnology Center For Fuels And Chemicals

SECTION A600
ANAEROBIC DIGESTION

10203L.xls | PFD-P110-A601 | B

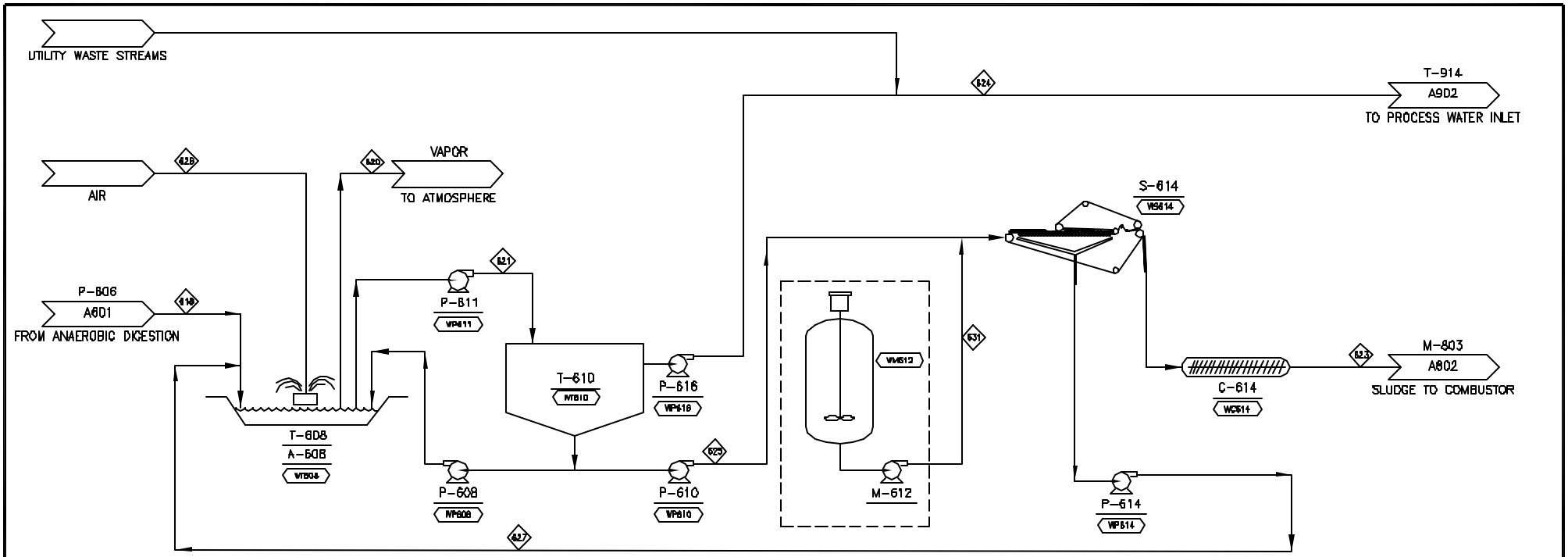

COMPONENT	UNITS	618	620	621	623	624	625	626	627	631
Total Flow	kg/hr	96,697	40,204	97,095	218	95,805	1,290	39,531	1,072	0
Insoluble Solids	%	0.0%	0.0%	0.1%	30.0%	0.0%	5.1%	0.0%	0.0%	0.0%
Soluble Solids	%	0.1%	0.0%	0.1%	0.1%	0.1%	0.1%	0.0%	0.1%	0.0%
Temperature	C	35	21	21	21	21	21	20	21	20
Pressure	atm	1.00	1.00	1.00	1.00	1.00	1.00	1.00	1.00	1.00
Vapor Fraction		0.00	1.00	0.00	0.00	0.00	0.00	1.00	0.00	0.00
Ethanol	kg/hr	6	0	1	0	1	0		0	
Water	kg/hr	96,414	627	96,881	152	95,658	1,222		1,070	
Glucose (SS)	kg/hr									
Xylose (SS)	kg/hr	0		0	0	0	0		0	
Arabinose (SS)	kg/hr	0								
Other Sugars (SS)	kg/hr									
Cellobiose (SS)	kg/hr									
Glucose Oligomers (SS)	kg/hr									
Xylose Oligomers (SS)	kg/hr									
Other Oligomers (SS)	kg/hr									
Corn Steep Liquor (SS)	kg/hr	80	1	80	0	79	1		1	
Others (Soluble Solids)	kg/hr									
Acetic Acid	kg/hr	31	0	3	0	3	0		0	
Sulfuric Acid	kg/hr									
Furfural	kg/hr	33	0	3	0	3	0		0	
HMF	kg/hr	5	0	0	0	0	0		0	
Carbon Dioxide	kg/hr	25	112	0	0	0	0		0	
Methane	kg/hr	1	1	0	0	0	0		0	
Oxygen	kg/hr	0	8,235	1	0	1	0	8,302	0	
Nitrogen	kg/hr	0	31,228	1	0	1	0	31,230	0	
Others	kg/hr	58	0	58	0	58	1		1	0
Cellulose (IS)	kg/hr									
Xylan (IS)	kg/hr									
Arabinan (IS)	kg/hr									
Other Sugar Polymers (IS)	kg/hr									
Cellulase (IS)	kg/hr									
Biomass (IS)	kg/hr	43		65	65		65			
Zymo (IS)	kg/hr									
Lignin (IS)	kg/hr									
Gypsum (IS)	kg/hr									
Ca(OH)2 (IS)	kg/hr									
Others (Insoluble Solids)	kg/hr									
Enthalpy Flow (millions)	Kcal/hr	-365.0	-2.3	-367.9	-0.6	-363.2	-4.7	0.0	-4.1	0.0
Average Density	g/ml	0.9841	0.0012	0.9976	1.1481	0.9973	1.0228	0.0012	0.9973	0.9983

Heat Stream No.	MM kcal/hr

Work Stream No.	kW
WC614	1.25
WM612	0.90
WP608	0.29
WP610	0.17
WP611	22.24
WP614	0.25
WP616	21.95
WS614	11.64
WT608	159.77
WT610	2.07

Eq. No.	Equipment Name	Req	Spare	Equipment Type	Mat Const.
A-608	Aerobic Lagoon Agitator	16		SURFACE-AERATO	CS
C-614	Aerobic Sludge Screw	1		SCREW	CS
M-612	Filter Precoat System	1		MISCELLANEOUS	CS
P-608	Aerobic Sludge Recycle Pump	1		SLURRY	SS316
P-610	Aerobic Sludge Pump	1		SLURRY	SS316
P-611	Aerobic Digestion Outlet Pump	1	1	CENTRIFUGAL	CS
P-614	Sludge Filtrate Recycle Pump	1	1	CENTRIFUGAL	CS
P-616	Treated Water Pump	1	1	CENTRIFUGAL	CS
S-614	Belt Filter Press	1		FILTER-PRESS	304SS;BUNA N
T-608	Aerobic Digestor	1		LINED-PIT	POLYMER LINED
T-610	Clarifier	1		CLARIFIER	CONCRETE

VER	DESCRIPTION	DATE
A	BSF PROCESS CASE	1/3/01
B	2002 DESIGN REPORT	5/23/02

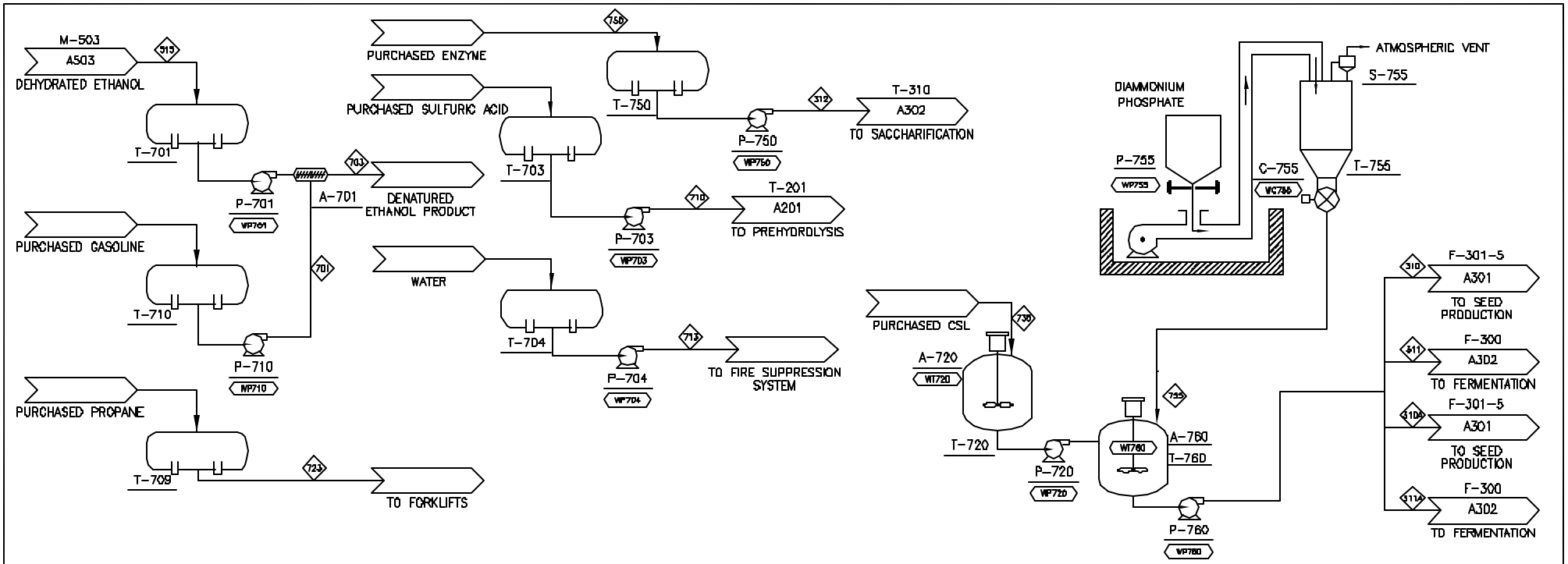

COMPONENT	UNITS	310	310A	311	311A	312	515	701	703	710	713	723	735	750	755
Total Flow	kg/hr	28	219	136	1,087	6,824	24,686	1,019	25,705	3,288	9,080	20	1,306	6,824	163
Insoluble Solids	%	0.0%	0.0%	0.0%	0.0%	8.3%	0.0%	0.0%	0.0%	0.0%	0.0%	0.0%	0.0%	8.3%	0.0%
Soluble Solids	%	0.0%	100.0%	0.0%	100.0%	0.0%	0.0%	0.0%	0.0%	0.0%	0.0%	0.0%	100.0%	0.0%	0.0%
Temperature	C	20	20	20	20	20	38	20	20	20	20	20	20	20	20
Pressure	atm	1.00	1.00	1.00	1.00	1.00	1.00	1.00	1.00	1.00	1.00	1.00	1.00	1.00	1.00
Vapor Fraction		0.00	0.00	0.00	0.00	0.00	0.00	0.00	0.00	0.00	0.00	1.00	0.00	0.00	0.00
Ethanol	kg/hr						24,564		24,564						
Water	kg/hr					6,255	122		122		9,080			6,255	
Glucose (SS)	kg/hr														
Xylose (SS)	kg/hr														
Arabinose (SS)	kg/hr														
Other Sugars (SS)	kg/hr														
Cellobiose (SS)	kg/hr														
Glucose Oligomers (SS)	kg/hr														
Xylose Oligomers (SS)	kg/hr														
Other Oligomers (SS)	kg/hr														
Corn Steep Liquor (SS)	kg/hr		219		1,087								1,306		
Others (Soluble Solids)	kg/hr														
Acetic Acid	kg/hr														
Sulfuric Acid	kg/hr									3,288					
Furfural	kg/hr														
HMF	kg/hr														
Carbon Dioxide	kg/hr														
Methane	kg/hr														
Oxygen	kg/hr														
Nitrogen	kg/hr														
Others	kg/hr	28		136				1,019	1,019			20			163
Cellulose (IS)	kg/hr														
Xylan (IS)	kg/hr														
Arabinan (IS)	kg/hr														
Other Sugar Polymers (IS)	kg/hr														
Cellulase (IS)	kg/hr					568								568	
Biomass (IS)	kg/hr														
Zymo (IS)	kg/hr														
Lignin (IS)	kg/hr														
Gypsum (IS)	kg/hr														
Ca(OH)2 (IS)	kg/hr														
Others (Insoluble Solids)	kg/hr														
Enthalpy Flow (millions)	Kcal/hr	-0.1	-0.8	-0.4	-4.1	-24.2	-35.6	-0.5	-36.4	-6.4	-34.4	0.0	-5.0	-24.2	-0.5
Average Density	g/ml	1.0096	0.9983	1.0096	0.9983	1.0403	0.7753	0.6876	0.7872	1.8166	0.9983	0.0018	0.9983	1.0403	1.0096

Work Stream No.	kW	Work Stream No.	kW
WC755	0.06	WP750	0.48
WP701	5.24	WP755	1.96
WP703	0.40	WP760	0.29
WP704	0.00	WT720	3.09
WP710	0.43	WT760	3.61
WP720	0.29		

Eq. No.	Equipment Name	Req	Spare	Equipment Type	Mat Const.
A-701	Denaturant In-line Mixer	1		STATIC	SS304
A-720	CSL Storage Tank Agitator	1		FIXED-PROP	SS304
A-760	CSL/DAP Day Tank Agitator	1		FIXED-PROP	SS304
C-755	DAP Solids Feeder	1		ROTARY-VALVE	A285C
P-701	Ethanol Product Pump	2	1	CENTRIFUGAL	CS
P-703	Sulfuric Acid Pump	1	1	CENTRIFUGAL	SS316
P-704	Firewater Pump	1	1	CENTRIFUGAL	CS
P-710	Gasoline Pump	1	1	CENTRIFUGAL	CS
P-720	CSL Pump	1	1	CENTRIFUGAL	CS
P-750	Cellulase Pump	1	1	CENTRIFUGAL	CS
P-755	DAP Unloading Blower	1		CENTRIFUGAL	CS
P-760	CSL/DAP Pump	1	1	CENTRIFUGAL	CS
S-755	DAP Vent Baghouse	1		FABRIC-FILTER	A285C;POLYEST
T-701	Ethanol Product Storage Tank	2		FLAT-BTM-STORAG	A285C
T-703	Sulfuric Acid Storage Tank	1		FLAT-BTM-STORAG	SS316
T-704	Firewater Storage Tank	1		FLAT-BTM-STORAG	A285C
T-709	Propane Storage Tank	1		HORIZONTAL STOR	A515
T-710	Gasoline Storage Tank	1		FLAT-BTM-STORAG	A285C
T-720	CSL Storage Tank	1		FLAT-BTM-STORAG	SS304
T-750	Cellulase Storage Tank	2		FLAT-BTM-STORAG	SS304
T-755	DAP Storage Bin	1		LIVE-BTM-BIN	CS
T-760	CSL/DAP Day Tank	1		FLAT-BTM-STORAG	SS304

VER	DESCRIPTION	DATE
A	DRF PROCESS CASE	1/3/02
B	SDWE DESIGN REPORT	9/17/02
		1 10/24/02

NATIONAL RENEWABLE ENERGY LABORATORY
Biotechnology Center For Fuels And Chemicals

SECTION A700
STORAGE

10203Lxls | PFD-P110-A701 | B

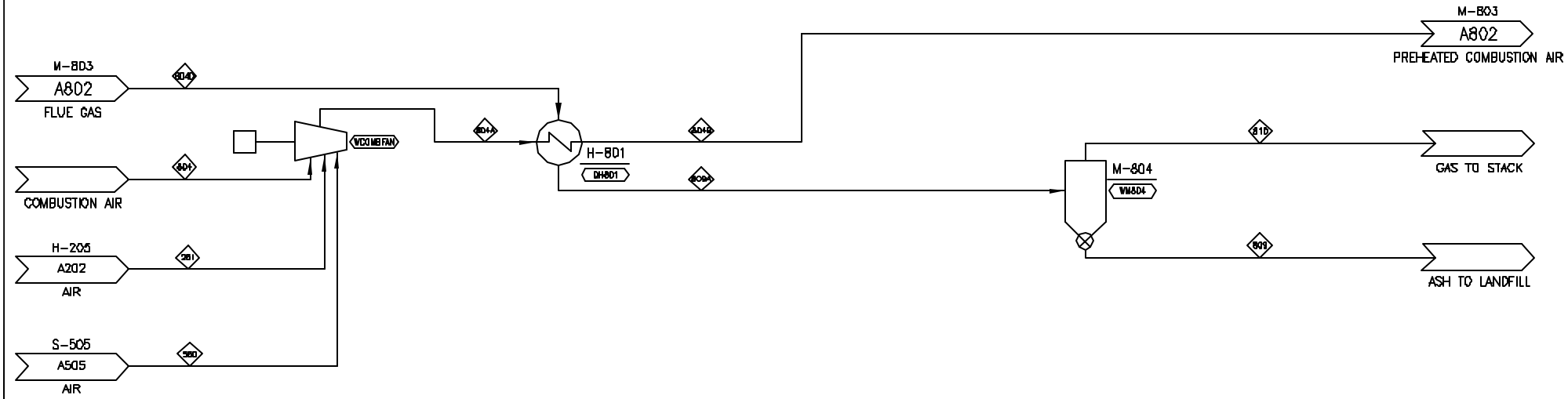

COMPONENT	UNITS	261	560	804	804A	804B	804D	809	809A	810
Total Flow	kg/hr	4,894	5,999	260,116	271,009	271,009	355,828	4,492	355,828	351,336
Insoluble Solids	%	0.0%	0.0%	0.0%	0.0%	0.0%	1.3%	100.0%	1.3%	0.0%
Soluble Solids	%	0.0%	0.1%	0.0%	0.0%	0.0%	0.3%	0.0%	0.3%	0.3%
Temperature	C	38	38	24	26	204	278		164	164
Pressure	atm	1.00	3.20	1.00	1.01	1.01	0.97		0.97	0.97
Vapor Fraction		1.00	1.00	1.00	1.00	1.00	0.99	0.00	0.99	1.00
Ethanol	kg/hr	0	0		0	0	0		0	0
Water	kg/hr	205	74	3,382	3,661	3,661	67,617		67,617	67,617
Glucose (SS)	kg/hr						1		1	1
Xylose (SS)	kg/hr						7		7	7
Arabinose (SS)	kg/hr						2		2	2
Other Sugars (SS)	kg/hr						2		2	2
Cellobiose (SS)	kg/hr						3		3	3
Glucose Oligomers (SS)	kg/hr						14		14	14
Xylose Oligomers (SS)	kg/hr						5		5	5
Other Oligomers (SS)	kg/hr						7		7	7
Corn Steep Liquor (SS)	kg/hr	0	4		4	4	996		996	996
Others (Soluble Solids)	kg/hr						74		74	74
Acetic Acid	kg/hr	1	1		1	1	21		21	21
Sulfuric Acid	kg/hr		0		0	0	2		2	2
Furfural	kg/hr	1	0		2	2	0		0	0
HMF	kg/hr	0	0		0	0	0		0	0
Carbon Dioxide	kg/hr						65,570		65,570	65,570
Methane	kg/hr						3		3	3
Oxygen	kg/hr	984	1,243	59,411	61,638	61,638	10,273		10,273	10,273
Nitrogen	kg/hr	3,702	4,677	197,324	205,703	205,703	206,283		206,283	206,283
Others	kg/hr	0	0		0	0	402		402	402
Cellulose (IS)	kg/hr						14	13	14	0
Xylan (IS)	kg/hr						4	4	4	0
Arabinan (IS)	kg/hr						1	1	1	0
Other Sugar Polymers (IS)	kg/hr						1	1	1	0
Cellulase (IS)	kg/hr						6	6	6	0
Biomass (IS)	kg/hr						1	1	1	0
Zymo (IS)	kg/hr						10	9	10	0
Lignin (IS)	kg/hr						142	140	142	2
Gypsum (IS)	kg/hr						28	27	28	0
Ca(OH)2 (IS)	kg/hr									
Others (Insoluble Solids)	kg/hr						4,342	4,290	4,342	52
Enthalpy Flow (millions)	Kcal/hr	-0.6	-0.2	-10.9	-11.7	0.2	-347.1	-12.0	-359.0	-347.0
Average Density	g/ml	0.0011	0.0036	0.0012	0.0012	0.0007	0.0407	3.1415	0.0409	0.0012

Heat Stream No.	MM kcal/hr		Work Stream No.	kW
QH801	11.86		WCOMBFAN	119.95
			WM804	176.00

Eq. No.	Equipment Name	Req	Spare	Equipment Type	Mat Const.
H-801	Burner Combustion Air Preheater	1		MISCELLANEOUS	
M-804	Combustion Gas Baghouse	1		FABRIC-FILTER	A285C;FABRIC

REV	DESCRIPTION	DATE
A	FOR PROCESS DATE	1/3/02
B	2001 DESIGN REPORT	6/22/02
		KI 8/23/02

NATIONAL RENEWABLE ENERGY LABORATORY
Biotechnology Center For Fuels And Chemicals

SECTION A800
BOILER FEED DRYING

I0203I.xls | PFD-P110-A801 | B

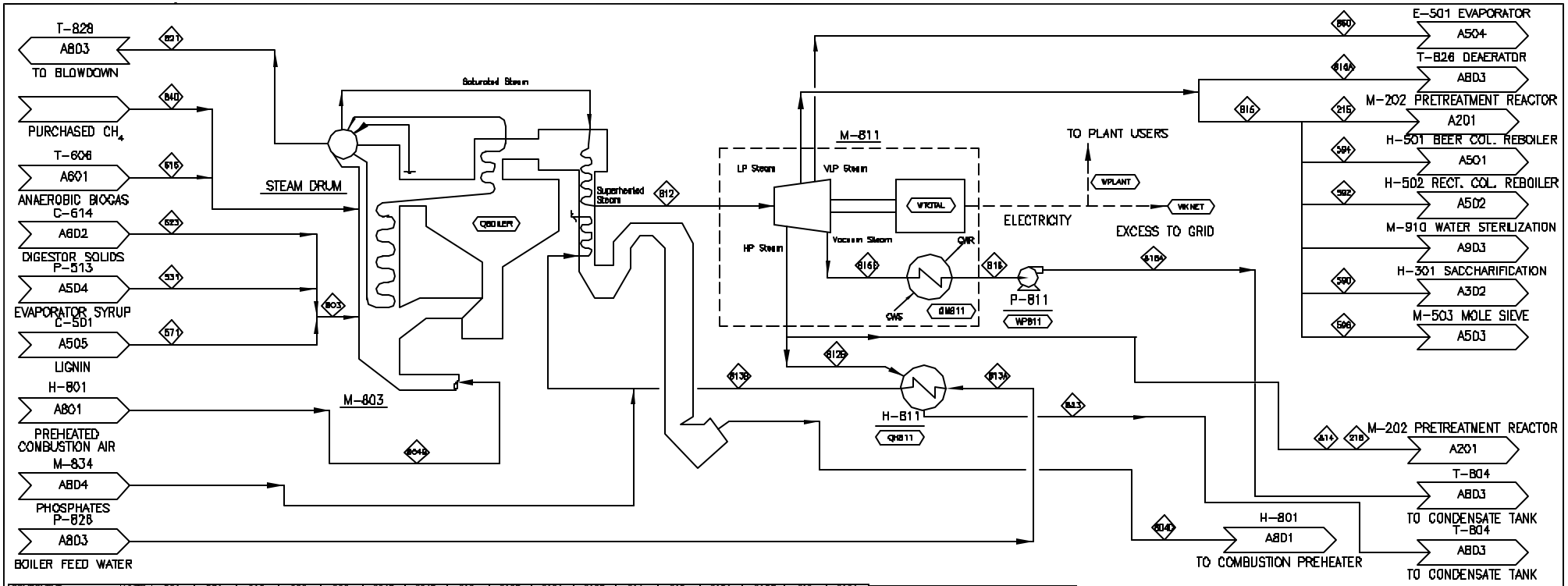

COMPONENT	UNITS	531	571	615	623	803	804B	804D	812	812B	813A	813B	814	815	815A	815E	816	816A	821	823	840	860
Total Flow	kg/hr	39,922	44,075	625	218	84,215	271,009	355,828	184,771	14,240	190,485	190,485	37,234	95,287	16,665	16,486	16,486	16,486	5,715	14,240	0	4,858
Insoluble Solids	%	2.4%	48.3%	0.0%	30.0%	26.5%	0.0%	1.3%	0.0%	0.0%	0.0%	0.0%	0.0%	0.0%	0.0%	0.0%	0.0%	0.0%	0.0%	0.0%	0.0%	0.0%
Soluble Solids	%	25.8%	4.9%	0.0%	0.1%	14.8%	0.0%	0.3%	0.0%	0.0%	0.0%	0.0%	0.0%	0.0%	0.0%	0.0%	0.0%	0.0%	0.0%	0.0%	0.0%	0.0%
Temperature	C	64	38	35	21	55	204	278	510	268	139	177	268	164	164	46	46	46	309	190	25	115
Pressure	atm	0.21	3.20	1.00	1.00	1.00	1.01	0.97	86.06	13.00	98.31	97.63	13.00	4.42	4.42	0.10	0.10	4.20	96.26	12.32	1.00	1.68
Vapor Fraction		0.00	0.00	1.00	0.00	0.00	1.00	0.99	1.00	1.00	0.00	0.00	1.00	1.00	1.00	0.87	0.00	0.00	0.00	0.00	1.00	0.97
Ethanol	kg/hr	0	3	0	0	3	0	0														
Water	kg/hr	23,957	19,783	28	152	43,893	3,661	67,617	184,771	14,240	190,485	190,485	37,234	95,287	16,665	16,486	16,486	16,486	5,715	14,240		4,858
Glucose (SS)	kg/hr	57	6			63		1														
Xylose (SS)	kg/hr	629	70		0	699		7														
Arabinose (SS)	kg/hr	150	17			167		2														
Other Sugars (SS)	kg/hr	176	20			196		2														
Cellobiose (SS)	kg/hr	249	28			277		3														
Glucose Oligomers (SS)	kg/hr	1,282	144			1,426		14														
Xylose Oligomers (SS)	kg/hr	447	50			497		5														
Other Oligomers (SS)	kg/hr	670	75			746		7														
Corn Steep Liquor (SS)	kg/hr		992	0	0	992	4	996														
Others (Soluble Solids)	kg/hr	6,628	743			7,372		74														
Acetic Acid	kg/hr	1,757	363	0	0	2,120	1	21														
Sulfuric Acid	kg/hr	107	12			118	0	2														
Furfural	kg/hr	2	8	0	0	9	2	0														
HMF	kg/hr	0	1	0	0	1	0	0														
Carbon Dioxide	kg/hr			273	0	0		65,570														
Methane	kg/hr			324	0	0		3													0	
Oxygen	kg/hr		0	0	0	0	61,638	10,273														
Nitrogen	kg/hr		1	0	0	1	205,703	206,283														
Others	kg/hr	2,847	468	0	0	3,315	0	402														
Cellulose (IS)	kg/hr	20	1,337			1,358		14														
Xylan (IS)	kg/hr	7	430			437		4														
Arabinan (IS)	kg/hr	1	60			61		1														
Other Sugar Polymers (IS)	kg/hr	1	72			73		1														
Cellulase (IS)	kg/hr	244	325			568		6														
Biomass (IS)	kg/hr	0	0		65	65		1														
Zymo (IS)	kg/hr	408	544			952		10														
Lignin (IS)	kg/hr	214	13,967			14,181		142														
Gypsum (IS)	kg/hr	0	27			28		28														
Ca(OH)2 (IS)	kg/hr																					
Others (Insoluble Solids)	kg/hr	69	4,528			4,597		4,342														
Enthalpy Flow (millions)	Kcal/hr	-88.4	-136.2	-1.0	-0.6	-225.2	0.2	-347.1	-554.1	-44.2	-699.8	-692.4	-115.6	-300.3	-52.5	-53.9	-62.1	-62.1	-19.9	-51.6	0.0	-15.5
Average Density	g/ml	1.0845	1.3326	0.0009	1.1481	1.2092	0.0007	0.0407	0.0259	0.0055	0.9320	0.8963	0.0055	0.0023	0.0023	0.0001	0.9898	0.9899	0.6925	0.8763	0.0007	0.0010

Heat Stream No.	MM kcal/hr	Work Stream No.	kW
QBOILER	118.35	WKNET	-18747.45
QH811	-0.64	WP811	3.89
QM811	8.22	WPLANT	11717.68
		WTOTAL	-30465.14

Eq. No.	Equipment Name	Req.	Spare	Equipment Type	Mat Const.
H-811	BFW Preheater	1		SHELL-TUBE	SS304
M-803	Fluidized Bed Combustion Reactor	1		MISCELLANEOUS	CS
M-811	Turbine/Generator	1		STEAM-TURBINE	
P-811	Turbine Condensate Pump	2		CENTRIFUGAL	SS304

VER	DESCRIPTION	DATE
A	BIP PROGRESS CHART	1/3/02
B	2002 DESIGN REPORT	8/22/02

NATIONAL RENEWABLE ENERGY LABORATORY
Biotechnology Center For Fuels And Chemicals

SECTION A800
COMBUSTOR AND TURBOGENERATOR

10203L.xls | PFD-P110-A802 | B

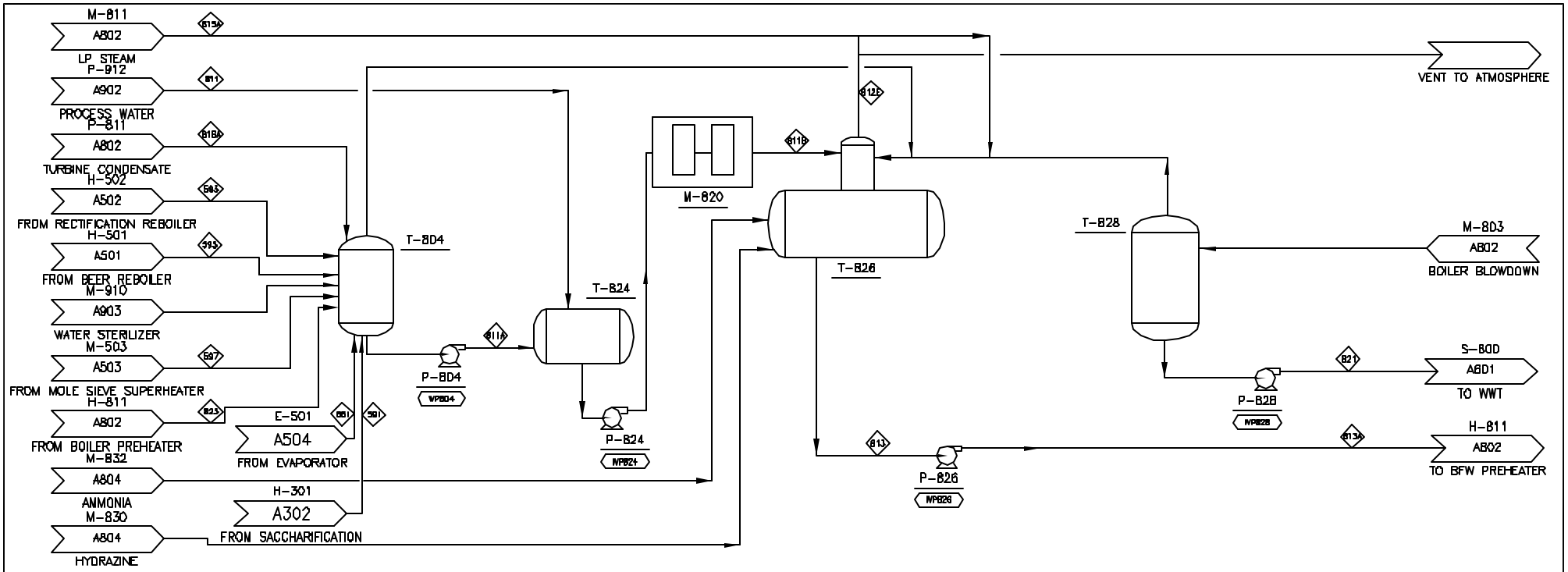

COMPONENT	UNITS	591	593	595	597	811	811A	811B	812E	813	813A	815A	816A	821	823	861
Total Flow	kg/hr	9,490	8,164	65,505	621	54,456	119,364	173,820	0	190,485	190,485	16,665	16,486	5,715	14,240	4,858
Insoluble Solids	%	0.0%	0.0%	0.0%	0.0%	0.0%	0.0%	0.0%	0.0%	0.0%	0.0%	0.0%	0.0%	0.0%	0.0%	0.0%
Soluble Solids	%	0.0%	0.0%	0.0%	0.0%	0.0%	0.0%	0.0%	0.0%	0.0%	0.0%	0.0%	0.0%	0.0%	0.0%	0.0%
Temperature	C	148	148	148	148	26	115	87		137	139	164	46	309	190	115
Pressure	atm	4.42	4.42	4.42	4.42	3.40	1.70	3.40	3.30	3.30	98.31	4.42	4.20	96.26	12.32	1.68
Vapor Fraction		0.00	0.00	0.00	0.00	0.00	0.00	0.00	0.00	0.00	0.00	1.00	0.00	0.00	0.00	0.00
Ethanol	kg/hr															
Water	kg/hr	9,490	8,164	65,505	621	54,456	119,364	173,820		190,485	190,485	16,665	16,486	5,715	14,240	4,858
Glucose (SS)	kg/hr															
Xylose (SS)	kg/hr															
Arabinose (SS)	kg/hr															
Other Sugars (SS)	kg/hr															
Cellobiose (SS)	kg/hr															
Glucose Oligomers (SS)	kg/hr															
Xylose Oligomers (SS)	kg/hr															
Other Oligomers (SS)	kg/hr															
Corn Steep Liquor (SS)	kg/hr															
Others (Soluble Solids)	kg/hr															
Acetic Acid	kg/hr															
Sulfuric Acid	kg/hr															
Furfural	kg/hr															
HMF	kg/hr															
Carbon Dioxide	kg/hr															
Methane	kg/hr															
Oxygen	kg/hr															
Nitrogen	kg/hr															
Others	kg/hr															
Cellulose (IS)	kg/hr															
Xylan (IS)	kg/hr															
Arabinan (IS)	kg/hr															
Other Sugar Polymers (IS)	kg/hr															
Cellulase (IS)	kg/hr															
Biomass (IS)	kg/hr															
Zymo (IS)	kg/hr															
Lignin (IS)	kg/hr															
Gypsum (IS)	kg/hr															
Ca(OH)2 (IS)	kg/hr															
Others (Insoluble Solids)	kg/hr															
Enthalpy Flow (millions)	Kcal/hr	-34.7	-29.9	-239.7	-2.3	-206.3	-441.6	-647.9		-700.4	-699.8	-52.5	-62.1	-19.9	-51.6	-18.0
Average Density	g/ml	0.8653	0.8653	0.8653	0.8653	0.9970	0.9467	0.9670		0.9283	0.9320	0.0023	0.9899	0.6925	0.8763	0.9466

Heat Stream No.	MM kcal/hr		Work Stream No.	kW
			WP804	20.46
			WP824	11.44
			WP826	719.27
			WP828	1.80

Eq. No.	Equipment Name	Req.	Spare	Equipment Type	Mat Const.
M-820	Hot Process Water Softener Systen	1		PACKAGE	
P-804	Condensate Pump	2		CENTRIFUGAL	SS316
P-824	Deaerator Feed Pump	2		CENTRIFUGAL	SS304
P-826	BFW Pump	5		CENTRIFUGAL	SS316
P-828	Blowdown Pump	2		CENTRIFUGAL	CS
T-804	Condensate Collection Tank	1		VERTICAL-VESSEL	A285C
T-824	Condensate Surge Drum	1		HORIZONTAL-VESS	SS304
T-826	Deaerator	1		HORIZONTAL-VESS	CS;SS316
T-828	Blowdown Flash Drum	1		HORIZONTAL-VESS	CS

REV	DESCRIPTION	DATE
A	BIP PROCESS CASE	1/3/02
B	2002 DESIGN REPORT	5/22/02
		5/29/02

NREL NATIONAL RENEWABLE ENERGY LABORATORY
Biotechnology Center For Fuels And Chemicals

SECTION A800
BOILER FEED WATER PREPARATION

10203I.xls | PFD-P110-A803 | B

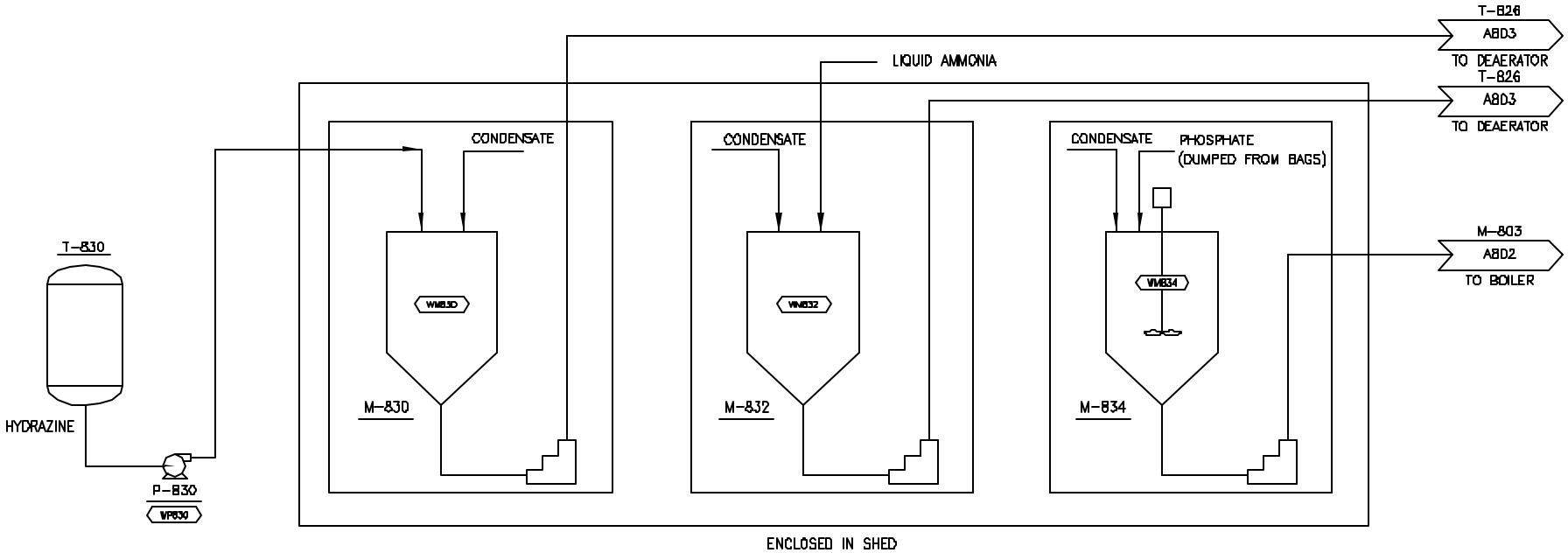

COMPONENT	UNITS																	
Total Flow	kg/hr																	
Insoluble Solids	%																	
Soluble Solids	%																	
Temperature	C																	
Pressure	atm																	
Vapor Fraction																		
Ethanol	kg/hr																	
Water	kg/hr																	
Glucose (SS)	kg/hr																	
Xylose (SS)	kg/hr																	
Arabinose (SS)	kg/hr																	
Other Sugars (SS)	kg/hr																	
Cellobiose (SS)	kg/hr																	
Glucose Oligomers (SS)	kg/hr																	
Xylose Oligomers (SS)	kg/hr																	
Other Oligomers (SS)	kg/hr																	
Corn Steep Liquor (SS)	kg/hr																	
Others (Soluble Solids)	kg/hr																	
Acetic Acid	kg/hr																	
Sulfuric Acid	kg/hr																	
Furfural	kg/hr																	
HMF	kg/hr																	
Carbon Dioxide	kg/hr																	
Methane	kg/hr																	
Oxygen	kg/hr																	
Nitrogen	kg/hr																	
Others	kg/hr																	
Cellulose (IS)	kg/hr																	
Xylan (IS)	kg/hr																	
Arabinan (IS)	kg/hr																	
Other Sugar Polymers (IS)	kg/hr																	
Cellulase (IS)	kg/hr																	
Biomass (IS)	kg/hr																	
Zymo (IS)	kg/hr																	
Lignin (IS)	kg/hr																	
Gypsum (IS)	kg/hr																	
Ca(OH)2 (IS)	kg/hr																	
Others (Insoluble Solids)	kg/hr																	
Enthalpy Flow (millions)	Kcal/hr																	
Average Density	g/ml																	

Heat Stream No.	MM kcal/hr		Work Stream No.	kW
			WM830	10.00
			WM832	10.00
			WM834	10.00
			WP830	0.02

Eq. No.	Equipment Name	Req	Spare	Equipment Type	Mat Const.
M-830	Hydrazine Addition Pkg.	1		PACKAGE	
M-832	Ammonia Addition Pkg	1		PACKAGE	
M-834	Phosphate Addition Pkg.	1		PACKAGE	
P-830	Hydrazine Transfer Pump	1		CENTRIFUGAL	CS
T-830	Hydrazine Drum	1		VERTICAL-VESSEL	SS316

VER	DESCRIPTION	DATE
A	ISF PROCESS BASIS	1/2/02
B	2001 DESIGN REPORT	3/22/02
		KI 8/22/01

NREL NATIONAL RENEWABLE ENERGY LABORATORY
Biotechnology Center For Fuels And Chemicals

SECTION A800
BOILER FEED WATER CHEMICALS

10203I.xls | PFD-P110-A804 | B

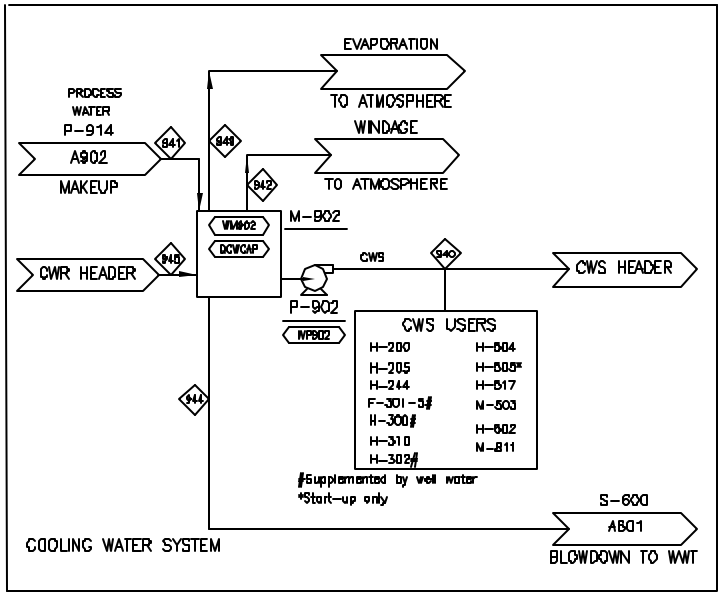

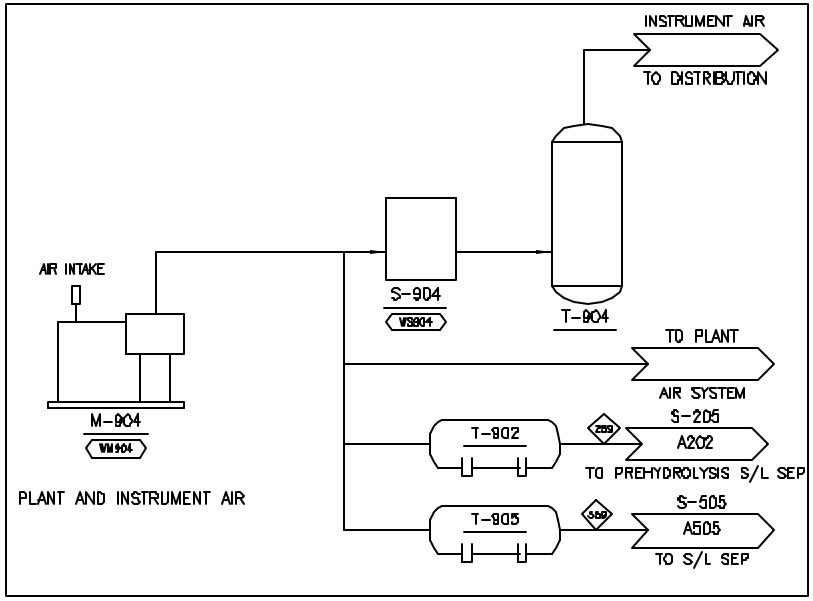

COMPONENT	UNITS	259	559	940	941	942	944	945	949
Total Flow	kg/hr	4,687	5,921	12,256,909	158,828	9,330	14,439	12,256,909	135,059
Insoluble Solids	%	0.0%	0.0%	0.0%	0.0%	0.0%	0.0%	0.0%	0.0%
Soluble Solids	%	0.0%	0.0%	0.0%	0.0%	0.0%	0.0%	0.0%	0.0%
Temperature	C	40	40	37	28	28	28	28	28
Pressure	atm	9.51	9.51	4.08	1.00	1.00	1.00	4.08	0.04
Vapor Fraction		1.00	1.00	0.00	0.00	0.00	0.00	0.00	1.00
Ethanol	kg/hr								
Water	kg/hr			12,256,909	158,828	9,330	14,439	12,256,909	135,059
Glucose (SS)	kg/hr								
Xylose (SS)	kg/hr								
Arabinose (SS)	kg/hr								
Other Sugars (SS)	kg/hr								
Cellobiose (SS)	kg/hr								
Glucose Oligomers (SS)	kg/hr								
Xylose Oligomers (SS)	kg/hr								
Other Oligomers (SS)	kg/hr								
Corn Steep Liquor (SS)	kg/hr								
Others (Soluble Solids)	kg/hr								
Acetic Acid	kg/hr								
Sulfuric Acid	kg/hr								
Furfural	kg/hr								
HMF	kg/hr								
Carbon Dioxide	kg/hr								
Methane	kg/hr								
Oxygen	kg/hr	984	1,243						
Nitrogen	kg/hr	3,703	4,678						
Others	kg/hr								
Cellulose (IS)	kg/hr								
Xylan (IS)	kg/hr								
Arabinan (IS)	kg/hr								
Other Sugar Polymers (IS)	kg/hr								
Cellulase (IS)	kg/hr								
Biomass (IS)	kg/hr								
Zymo (IS)	kg/hr								
Lignin (IS)	kg/hr								
Gypsum (IS)	kg/hr								
Ca(OH)2 (IS)	kg/hr								
Others (Insoluble Solids)	kg/hr								
Enthalpy Flow (millions)	Kcal/hr	0.0	0.0	-46287.8	-601.1	-35.3	-54.6	-46390.7	-432.8
Average Density	g/ml	0.0106	0.0106	0.9819	0.9906	0.9906	0.9906	0.9906	0.0000

Heat Stream No.	MM kcal/hr	Work Stream No.	kW
QCWCAP	102.94	WM902	657.67
		WM904	1110.89
		WP902	1258.33
		WS904	7.36

Eq. No.	Equipment Name	Req	Spare	Equipment Type	Mat Const.
M-902	Cooling Tower System	1		INDUCED-DRAFT	FIBERGLASS
M-904	Plant Air Compressor	2	1	CENTRIFUGAL	
P-902	Cooling Water Pump	1	1	CENTRIFUGAL	CS
S-904	Instrument Air Dryer	1	1	PACKAGE	CS
T-902	Prehydrolysis Filter Air Receiver	3		HORIZONTAL-PRESS	CS
T-904	Plant Air Receiver	1		HORIZONTAL-VESSE	CS
T-905	Product Recovery Filter Air Receive	4		HORIZONTAL-PRESS	CS

VER	DESCRIPTION	DATE
A	SIM PROGRESS CHECK	1/3/03
B	2001 DESIGN REPORT	5/22/03

NATIONAL RENEWABLE ENERGY LABORATORY
Biotechnology Center For Fuels And Chemicals

SECTION A900
COOLING WTR PLNT & INST AIR SYS

10203I.xls | PFD-P110-A901 | B

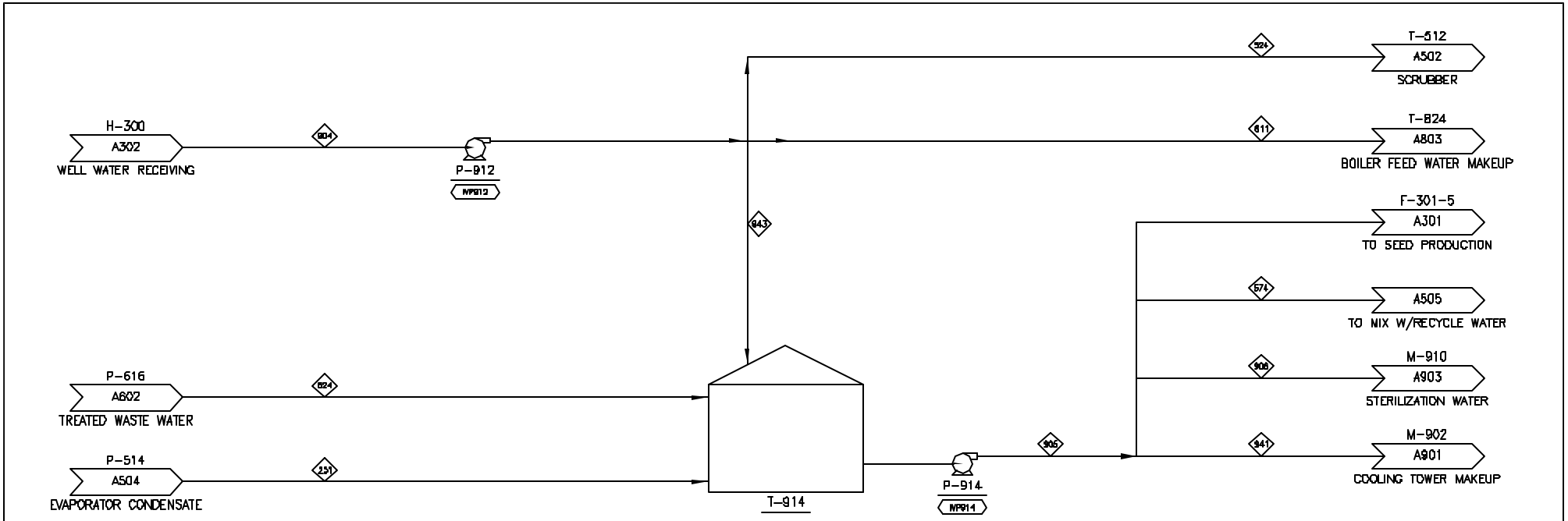

COMPONENT	UNITS	251	524	574	624	811	904	905	906	941	943
Total Flow	kg/hr	71,466	35,912	104,579	95,805	54,456	186,649	263,552	145	158,828	96,281
Insoluble Solids	%	0.0%	0.0%	0.0%	0.0%	0.0%	0.0%	0.0%	0.0%	0.0%	0.0%
Soluble Solids	%	0.1%	0.0%	0.0%	0.1%	0.0%	0.0%	0.1%	0.0%	0.0%	0.0%
Temperature	C	74	26	20	21	26	26	38	20	28	26
Pressure	atm	3.00	1.00	1.00	1.00	3.40	1.00	1.00	1.00	1.00	1.00
Vapor Fraction		0.00	0.00	0.00	0.00	0.00	0.00	0.00	0.00	0.00	0.00
Ethanol	kg/hr	51			1			52			
Water	kg/hr	70,684	35,912	104,579	95,658	54,456	186,649	262,624	145	158,828	96,281
Glucose (SS)	kg/hr										
Xylose (SS)	kg/hr	0			0			0			
Arabinose (SS)	kg/hr	0						0			
Other Sugars (SS)	kg/hr										
Cellobiose (SS)	kg/hr										
Glucose Oligomers (SS)	kg/hr										
Xylose Oligomers (SS)	kg/hr	0						0			
Other Oligomers (SS)	kg/hr										
Corn Steep Liquor (SS)	kg/hr	96			79			175			
Others (Soluble Solids)	kg/hr										
Acetic Acid	kg/hr	540			3			543			
Sulfuric Acid	kg/hr	0						0			
Furfural	kg/hr	80			3			83			
HMF	kg/hr	12			0			13			
Carbon Dioxide	kg/hr				0			0			
Methane	kg/hr				0			0			
Oxygen	kg/hr				1			1			
Nitrogen	kg/hr				1			1			
Others	kg/hr	3			58			60			
Cellulose (IS)	kg/hr										
Xylan (IS)	kg/hr										
Arabinan (IS)	kg/hr										
Other Sugar Polymers (IS)	kg/hr										
Cellulase (IS)	kg/hr										
Biomass (IS)	kg/hr										
Zymo (IS)	kg/hr										
Lignin (IS)	kg/hr										
Gypsum (IS)	kg/hr										
Ca(OH)2 (IS)	kg/hr										
Others (Insoluble Solids)	kg/hr										
Enthalpy Flow (millions)	Kcal/hr	-265.8	-136.0	-396.6	-363.2	-206.3	-706.8	-993.6	-0.5	-601.1	-364.6
Average Density	g/ml	0.9442	0.9925	0.9983	0.9973	0.9970	0.9925	0.9811	0.9983	0.9906	0.9925

Heat Stream No.	MM kcal/hr	Work Stream No.	kW
		WP912	20.85
		WP914	58.67

Eq. No.	Equipment Name	Req.	Spare	Equipment Type	Mat Const.
P-912	Make-up Water Pump	1	1	CENTRIFUGAL	CS
P-914	Process Water Circulating Pump	2	1	CENTRIFUGAL	CS
T-914	Process Water Tank	1		FLAT-BTM-STORAG	CS

VER	DESCRIPTION	DATE
A	BEP PROCESS CHGS	1/3/03
B	2002 DESIGN REPORT	8/22/02
		LL 4/18/02

NREL
NATIONAL RENEWABLE ENERGY LABORATORY
Biotechnology Center For Fuels And Chemicals

SECTION A900
PROCESS WATER

10203l.xls

PFD-P110-A902 B

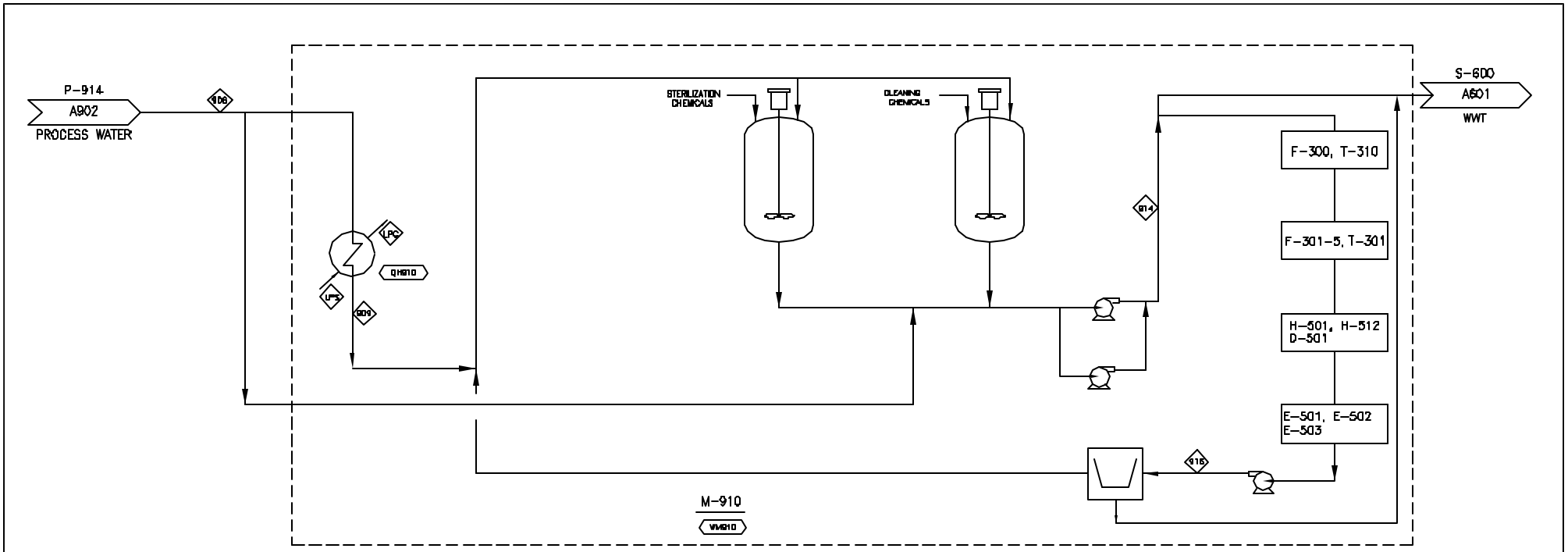

COMPONENT	UNITS	906	909	914	916
Total Flow	kg/hr	145	145	63	63
Insoluble Solids	%	0.0%	0.0%	0.0%	0.0%
Soluble Solids	%	0.0%	0.0%	0.0%	0.0%
Temperature	C	20	121	20	20
Pressure	atm	1.00	1.00	1.00	1.00
Vapor Fraction		0.00	1.00	0.00	0.00
Ethanol	kg/hr				
Water	kg/hr	145	145	63	63
Glucose (SS)	kg/hr				
Xylose (SS)	kg/hr				
Arabinose (SS)	kg/hr				
Other Sugars (SS)	kg/hr				
Cellobiose (SS)	kg/hr				
Glucose Oligomers (SS)	kg/hr				
Xylose Oligomers (SS)	kg/hr				
Other Oligomers (SS)	kg/hr				
Corn Steep Liquor (SS)	kg/hr				
Others (Soluble Solids)	kg/hr				
Acetic Acid	kg/hr				
Sulfuric Acid	kg/hr				
Furfural	kg/hr				
HMF	kg/hr				
Carbon Dioxide	kg/hr				
Methane	kg/hr				
Oxygen	kg/hr				
Nitrogen	kg/hr				
Others	kg/hr				
Cellulose (IS)	kg/hr				
Xylan (IS)	kg/hr				
Arabinan (IS)	kg/hr				
Other Sugar Polymers (IS)	kg/hr				
Cellulase (IS)	kg/hr				
Biomass (IS)	kg/hr				
Zymo (IS)	kg/hr				
Lignin (IS)	kg/hr				
Gypsum (IS)	kg/hr				
Ca(OH)2 (IS)	kg/hr				
Others (Insoluble Solids)	kg/hr				
Enthalpy Flow (millions)	Kcal/hr	-0.5	-0.5	-0.2	-0.2
Average Density	g/ml	0.998	0.001	0.998	0.998

Heat Stream	Mmkcal/hr	Work Stream No.	kW
QH910	-0.09	WM910	257.36

Eq. No.	Equipment Name	Req	Spare	Equipment Type	Mat Const.
M-910	CIP System	1		MISCELLANEOUS	CS

VER	DESCRIPTION	DATE
A	CIP PROCESS CARD	1/3/03
B	2003 DESIGN REPORT	5/22/03