SERI/STR-231-3142
UC Category: 61
DE87001186

Economic Feasibility Study of an Acid Hydrolysis-Based Ethanol Plant

A Subcontract Report

Badger Engineers, Inc.
Cambridge, MA

April 1987

SERI Technical Monitor:
J. D. Wright

Prepared under Subcontract No. ZX-3-03096-2

Solar Energy Research Institute
A Division of Midwest Research Institute

1617 Cole Boulevard
Golden, Colorado 80401-3393

Prepared for the
U.S. Department of Energy
Contract No. DE-AC02-83CH10093

Table of Contents

Section 1.0	Executive Summary and Conclusions
Section 2.0	Technical Approach and Design Basis
Section 3.0	Process Considerations
Section 4.0	Process Description
Section 5.0	Economic Assessment
Section 6.0	Technology Assessment

Appendixes

Appendix I	References
Appendix II	Hydrolyzate Yeast Toxicity Trials Report
Appendix III	Dartmouth Reactor Extended Operation Trial
Appendix IV	Lignin/Tar Residue Separation Trials Report
Appendix V	Details of Risk Analysis Calculations
Appendix VI	Details of Economic Analysis Calculations
Appendix VII	General Estimating Procedures

Process Flow Diagrams

Process flow diagrams are given for the base case process (Design Case I) followed by plot plans for the base case plant.

Process flow diagrams for the hydrolysis reaction section of Design Case II are also included.

GY-108 WOOD CHIP TRUCK SCALE

GY-107 WOOD CHIP TRUCK UNLOADER

GY-109 WOOD CHIP RAIL CAR SCALE

GM-106A/B YARD SWITCHING ENGINES

GS-101 WOOD BUCKET CONVEYOR

B-8 TRUCK WEIGH SCALE HOUSE

GM-104 A/B/S FRONT END LOADERS

GF-103 CHIP PILE SCREEN

GS-102 JETBELT CONVEYOR

GS-105 MAGNETIC CHIP CLEANER

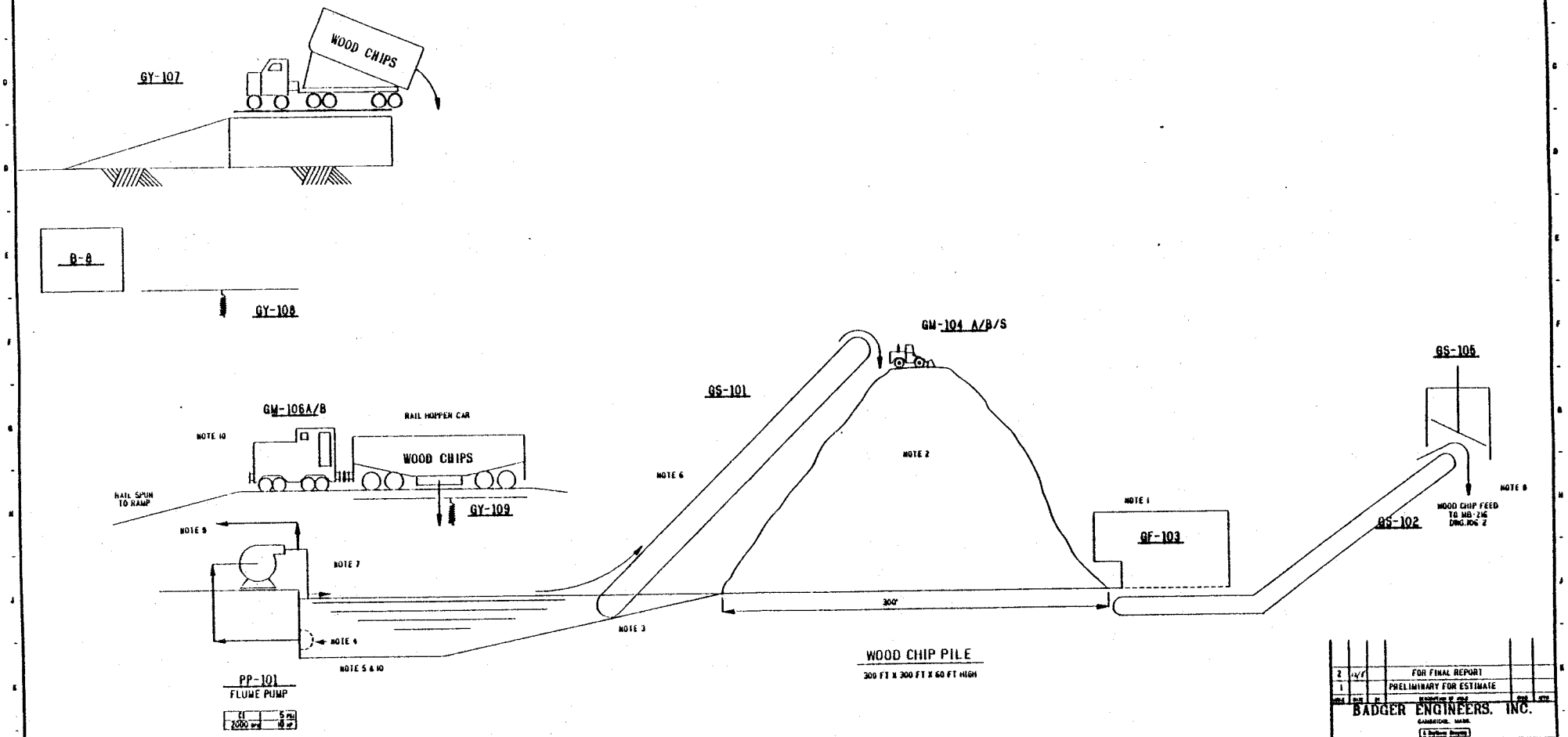

NOTES:

1. PILE IS "MANAGED" AND FED TO GS-102 USING TWO 121 FRONT END LOADERS.
2. APPROXIMATELY TWO WEEKS CHIP STORAGE.
3. 50 FT. LONG X 6 FT. DEEP X 50 FT. WIDE WASHING POND CONCRETE BASE
4. STRAINER ON PUMP FEED.
5. DEBRIS AND TRAMP MATERIAL CLEARED PERIODICALLY BY DRAINING POND AND USING FRONTEND LOADER.
6. BUCKET CONVEYOR TO ALLOW WATER DRAINAGE.
7. CIRCULATION PUMP PP-101 TO WASH FLOATING CHIPS TO CONVEYOR.
8. PERIODIC TRAMP IRON REMOVAL FROM MAGNET BY FRONT END LOADER.
9. PERIODIC DRAINAGE TO WASTE.
10. L.P. STEAM INJECTED DURING WINTER MONTHS TO PREVENT FREEZING.

BASE CASE 25MW GAL/YEAR

2		FOR FINAL REPORT	
1		PRELIMINARY FOR ESTIMATE	

BADGER ENGINEERS, INC.
CAMBRIDGE, MASS.

PROCESS FLOW DIAGRAM
WOOD CHIP FEED HANDLING
RECEIVING, STORAGE, FEEDING
SOLAR ENERGY RESEARCH INSTITUTE
GOLDEN COLORADO

SCALE: NONE
CERTIFIED
DATE

DWG. NO. E0461-106-1 2

GA-207 STATIC MIXER | II-207 ACID WATER HEATER | MB-216 CHIP FEED BIN | GG-202 A/B/C GRINDER | GS-201 A/B/C CHIP SCREW | GS-203 A/B/C WOOD GRINDS CONVEYOR | GY-229 OVERSIZE WOOD GRIND SCREEN | MB-217 GROUND WOOD BIN | GS-231 A/B WOOD GRINDS BELT FEEDER | GA-204 A/B HIGH PRESS FEEDER | MS-201 A/B SLURRY VESSEL | GA-206 A/B WOOD SLURRY AGITATOR | MR-202 A/B/S HYDROLYSIS REACTOR | MS-203 HIGH PRESS. FLASH DRUM | MS-204 LOW PRESS. FLASH DRUM | II-209 SLURRY COOLER

II-216 SLURRY VESSEL VENT CONDENSER | II-202 H.P. FLASH VAPOR AFTERCOOLER | II-201 PRIMARY FEED WATER PREHEATER | II-211 SECONDARY FEEDWATER PREHEATER | II-205 AQUEOUS FURFURAL COOLER | II-212 LP FLASH VAPOR AFTERCOOLER

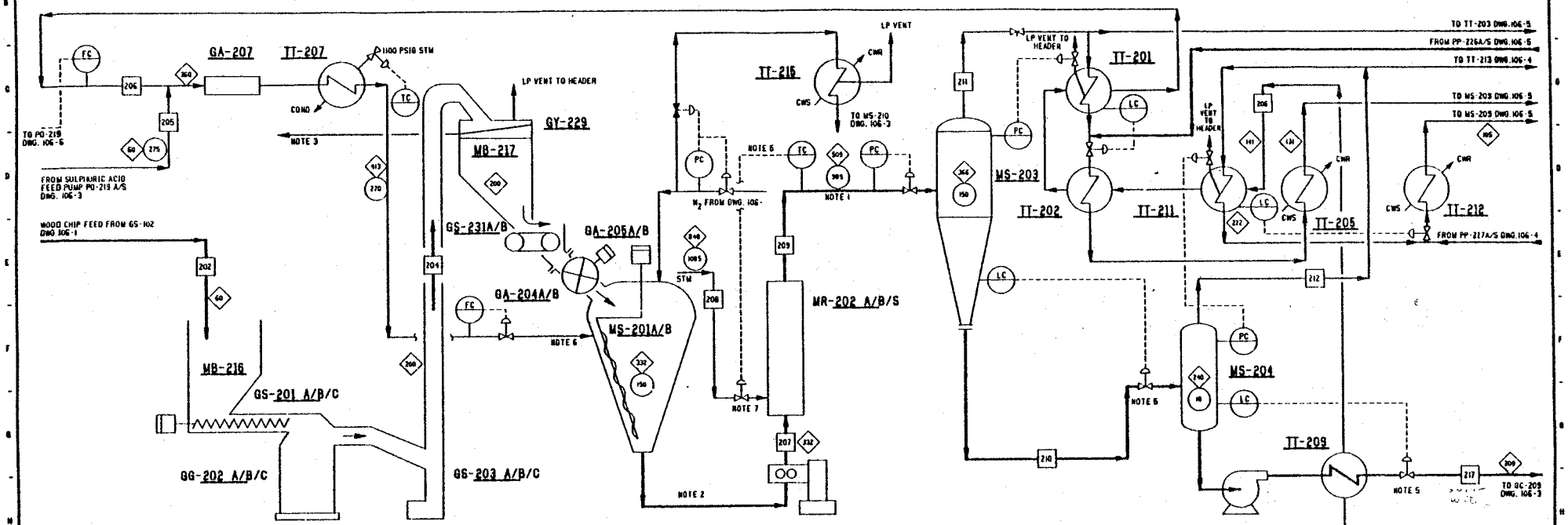

STREAM NO. / COMPONENTS	MW	202	204	208	206	207	208	209	210	211	212	217
WOOD (DRY)	800	162729	162729			162729						
FURFURAL	96							17019	6137	10882	3176	2961
ACETIC ACID	60							970 a	721	249	155	566
ALPHA-PINENE	136							3307 a	2643	664	421	2222
WATER	18	162729	162729		483116	645845	154819	810647	658508	152339	95210	563298
FORMIC ACID	46							827	720	107	85	635
LEVULINIC ACID	116							2094	2089	5		2089
HMF	126							13227	13227			13227
OLEIC ACID	282							3307 a	3306	1		3306
SULFURIC ACID	98			5004		5004		5004	5003	1		5003
LIGNIN	5000							40190 a	40190			40190
ASH	100							573	573			573
HEXOSE SUGARS	180							45855	45855			45855
ANHYDROPYRANOSE	162							13845	13845			13845
TAR (SOLUBLE)	400							11332	11332			2266
TAR (INSOLUBLE)	400											9066
CALCIUM HYDROXIDE	74											
CALCIUM FORMATE	130											
CALCIUM ACETATE	158											
GYPSUM	172											
CALCIUM LEVULINATE	270											
TOTAL - LB/HR.		325458	325458	5004	483116	813578	154819	968397	884149	164248	99047	705102
TOTAL - LB MOL/HR							8601			8581	5326	
GPM AT CONDITIONS				6	967	1674		2523	1850			1514

PD-201 A/B/S HYDROLYSIS FEED PUMP

PP-204 A/S LIGNIN SLURRY PUMP

NOTES:

1. TEFLON LINED C.S. FOR REACTOR EXIT PIPING.
2. ENTRANCE PIPING TO PD-201 12" DIAM. MINIMUM LENGTH
3. OVERSIZE RETURNED TO CHIP PILE VIA FRONT LOADER.
4. HIGH TEMP STEAM SHUT OFF AT 625° F.
5. 12" DURIRON CONTROL VALVE.
6. MINIMUM LENGTH
7. TANGENTIAL STEAM INLET

LEGEND:

◇ TEMPERATURE °F

○ PRESSURE, PSIG

□ STREAM NO.

TABLE STREAM FLOWS IN LB/HR.

BASE CASE 25MM GAL/YEAR

2	10/5	FOR FINAL REPORT
1		PRELIMINARY FOR ESTIMATE

BADGER ENGINEERS, INC.
CAMBRIDGE, MASS.

PROCESS FLOW DIAGRAM
ACID HYDROLYSIS UNIT 200 (SHEET 1 OF 6)
HYDROLYSIS REACTION
SOLAR ENERGY RESEARCH INSTITUTE

GOLDEN COLORADO

SCALE: NONE

CERTIFIED
DATE

DWG. NO. E0461-106-2 2

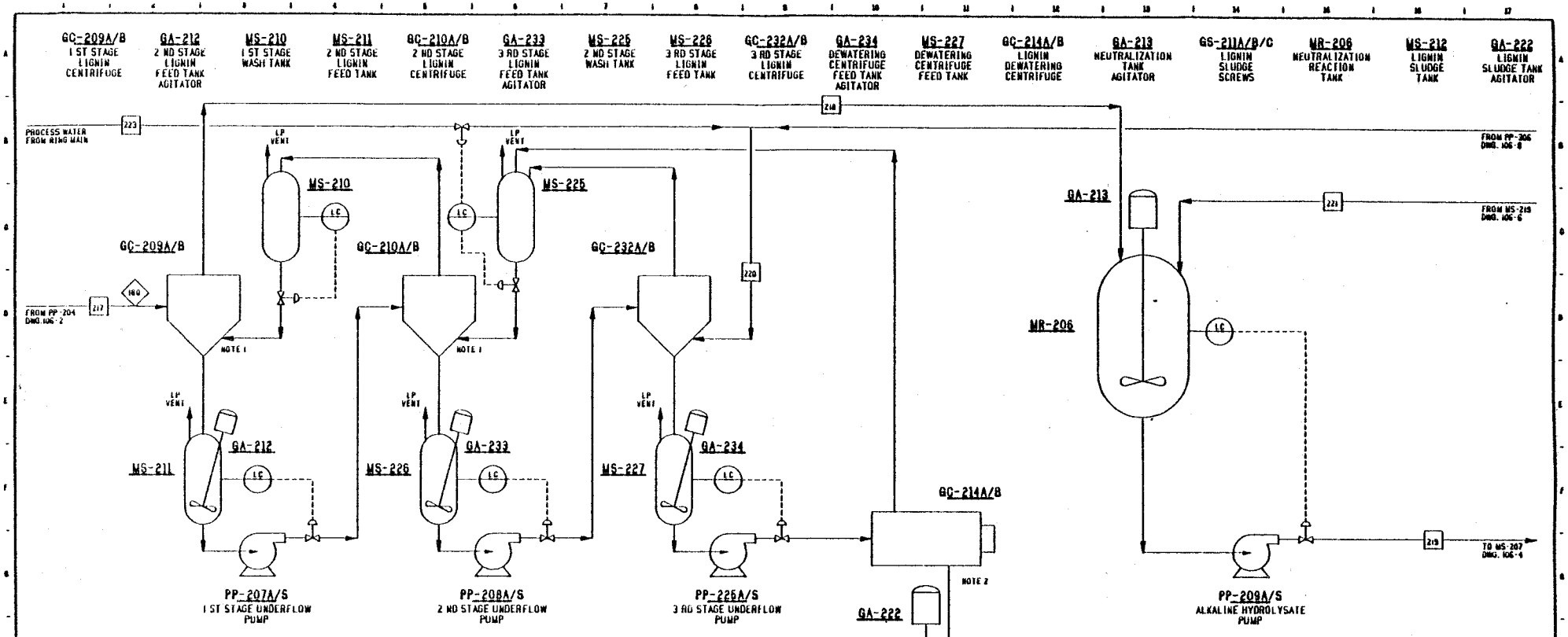

STREAM NO. / COMPONENTS	MW	217	218	219	220	221	222	223
WOOD (DRY)	800							
FURFURAL	96	2961	2954	3000		46	7	
ACETIC ACID	60	566	564				1	
ALPHA-PINENE	136	2222	2216	2251		35	6	
WATER	18	563298	651429	662530	136821	10470	48690	16557
FORMIC ACID	46	635	634				2	
LEVULINIC ACID	116	2089	2084	719		11	5	
HMF	126	13227	13194	13402		208	33	
OLEIC ACID	282	3306	3297	3349		51	8	
SULFURIC ACID	98	5003	4990				13	
LIGNIN	5000	40190					40190	
ASH	100	573	572	581		9	1	
HEXOSE SUGARS	180	45855	45400	46121		721	455	
ANHYDROPYRANOSE	162	13845	13810	14028		218	35	
TAR (SOLUBLE)	400	2266	2266					
TAR (INSOLUBLE)	400	9066		2266			9066	
CALCIUM HYDROXIDE	74					5067		
CALCIUM FORMATE	130			910		14		
CALCIUM ACETATE	158			755		12		
GYPSUM	172			8760				
CALCIUM LEVULINATE	270			1626		25		
TOTAL - LB/HR.		705102	743411	760298	136821	16887	98512	16557
TOTAL - LB MOL/HR								
GPM AT CONDITIONS		1450	1530	1565	275	35	180	33

LEGEND:

- ◇ TEMPERATURE °F
- ○ PRESSURE, PSIG
- □ STREAM NO.

TABLE STREAM FLOWS IN LB/HR.

NOTES:

1. DISPLACEMENT WASH LIQUOR TO CENTRIFUGE BY GRAVITY FEED.
2. 50 % LIGNIN/TAR SLUDGE

BASE CASE 25MM GAL/YEAR

2	1/4		FOR FINAL REPORT
1			PRELIMINARY FOR ESTIMATE

BADGER ENGINEERS, INC.
CAMBRIDGE, MASS.

PROCESS FLOW DIAGRAM
ACID HYDROLYSIS UNIT 200 (SHEET 2 OF 8)
LIGNIN SEPARATION AND WASHING
SOLAR ENERGY RESEARCH INSTITUTE
GOLDEN COLORADO

SCALE: NONE
CERTIFIED
DATE

DWG. NO. E0461-106-3 SHEET 2

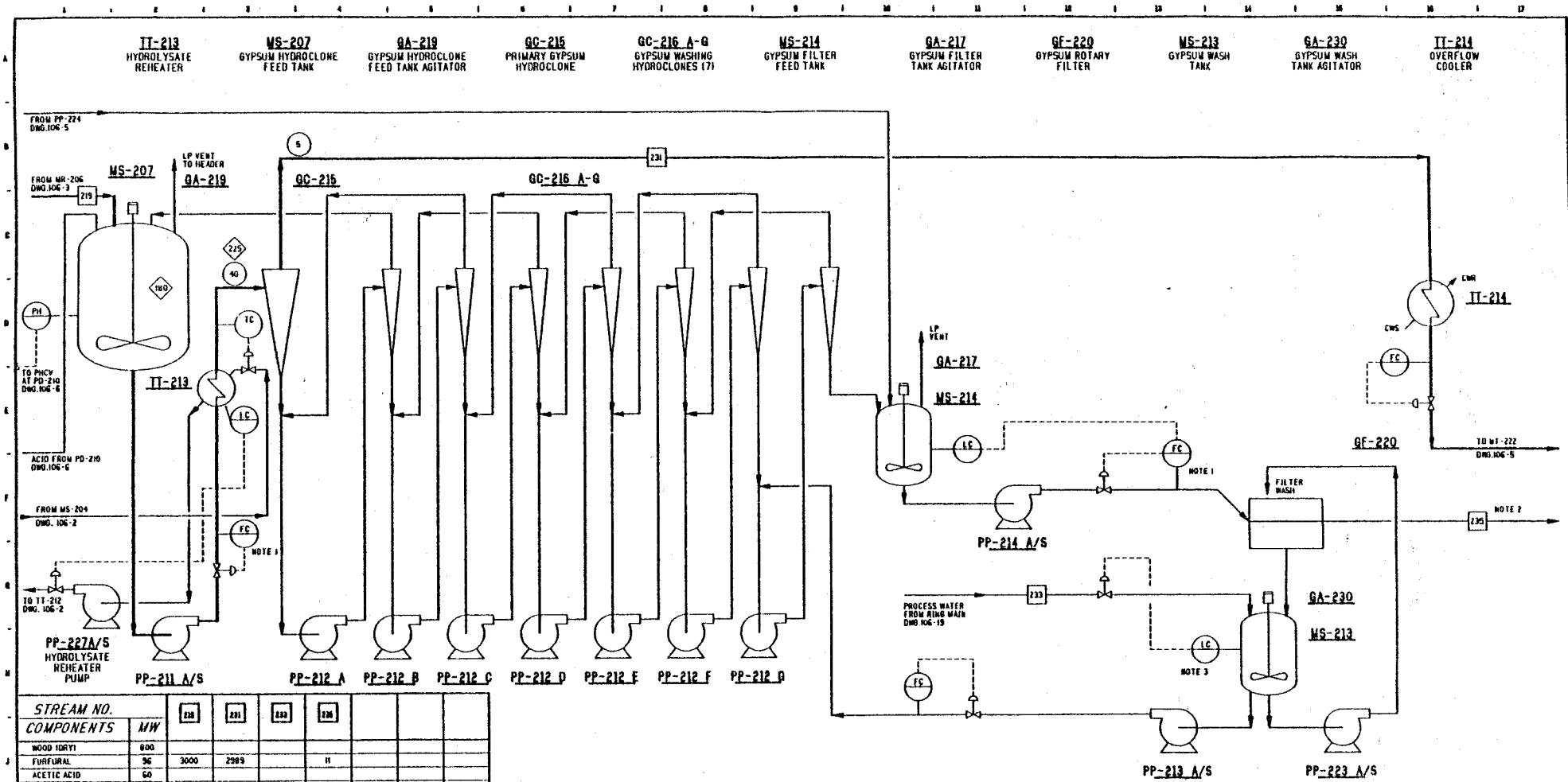

STREAM NO. / COMPONENTS	MW	219	231	233	235			
WOOD (DRY)	800							
FURFURAL	96	3000	2989		11			
ACETIC ACID	60							
ALPHA-PINENE	136	2251	2243		8			
WATER	18	662530	672755	15683	5458			
FORMIC ACID	46							
LEVULINIC ACID	116	719	716		3			
HMF	126	13402	13355		47			
OLEIC ACID	282	3349	3337		12			
SULFURIC ACID	98							
LIGNIN	5000							
ASH	100	581	579		2			
HEXOSE SUGARS	180	46121	45956		165			
ANHYDROPYRANOSE	162	14028	13979		50			
TAR (SOLUBLE)	400							
TAR (INSOLUBLE)	400	2266			2266			
CALCIUM HYDROXIDE	74							
CALCIUM FORMATE	130	910	906		3			
CALCIUM ACETATE	158	755	752		3			
GYPSUM	172	8760			8760			
CALCIUM LEVULINATE	270	1626	1621		6			
TOTAL - LB/HR.		760298	753188	15683	16794			
TOTAL - LB MOL/HR								
GPM AT CONDITIONS		1565	1524	31	27			

PP-211 A/S GYPSUM HYDROCLONE FEED PUMP

PP-212 A-G GYPSUM HYDROCLONE PUMPS

PP-214 A/S GYPSUM FILTER PUMP

PP-213 A/S GYPSUM WASH PUMP

PP-223 A/S GYPSUM FILTER WASH PUMP

NOTES:

1. MAGNETIC FLOW METER OR EQUIVALENT
2. GYPSUM CAKE DIRECT TO TRUCK OR STORAGE AREA
3. LEVEL CONTROL ABOVE MIN. LEVEL

LEGEND:

◇ TEMPERATURE °F

○ PRESSURE, PSIG

□ STREAM NO.

TABLE STREAM FLOWS IN LB/HR.

BASE CASE 25MM GAL/YEAR

2	12/8	FOR FINAL REPORT	
1		PRELIMINARY FOR ESTIMATE	

BADGER ENGINEERS, INC.

PROCESS FLOW DIAGRAM

ACID HYDROLYSIS UNIT 200 (SHEET 8 OF 5)

GYPSUM SEPARATION AND WASHING

SOLAR ENERGY RESEARCH INSTITUTE

GOLDEN COLORADO

SCALE: NONE

CERTIFIED

DATE

DWG. NO. E0461-106-4 SHEET 2

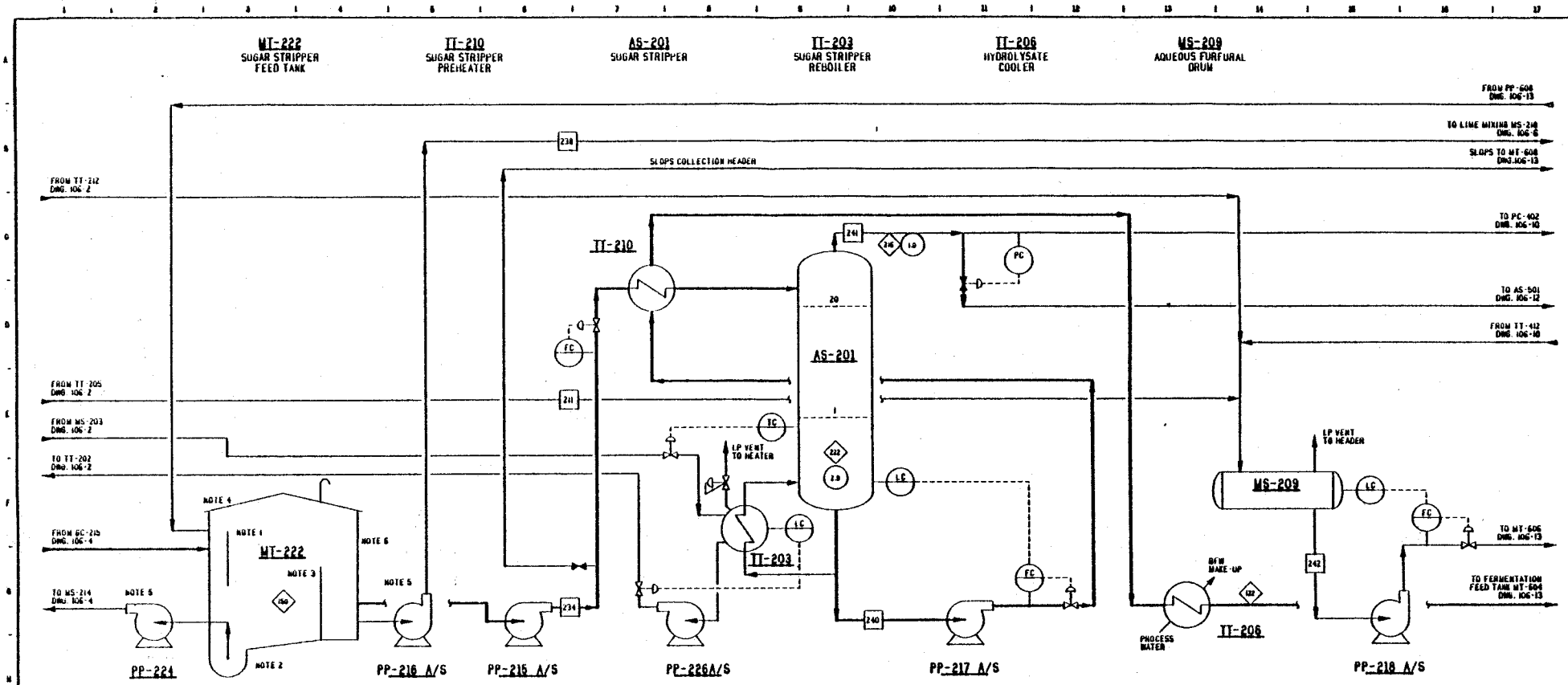

STREAM NO. / COMPONENTS	M/W	231	234	238	240	241	242	
WOOD (DRY)	800							
FURFURAL	96	10882	2543	46	635	2305	16367	
ACETIC ACID	60	245					404	
ALPHA-PINENE	136	664	2208	35	1514	294	1379	
WATER	18	152339	662285	10476	585943	76342	327605	
FORMIC ACID	46	107					152	
LEVULINIC ACID	116	5	705	11	705		5	
HMF	126		13147	208	13147			
OLEIC ACID	282	1	3285	52	3285		1	
SULFURIC ACID	98	1					1	
LIGNIN	5000							
ASH	100		570	9	570			
HEXOSE SUGARS	180		45736	720	45736			
ANHYDROPYRANOSE	162		13761	218	13760			
TAR (SOLUBLE)	400							
TAR (INSOLUBLE)	400							
CALCIUM HYDROXIDE	74							
CALCIUM FORMATE	130		892	14	892			
CALCIUM ACETATE	158		740	12	740			
GYPSUM	172							
CALCIUM LEVULINATE	270		1596	25	1596			
TOTAL - LB/HR.		164248	747368	11820	668423	78945	345954	
TOTAL - LB MOL/HR		8581				4264		
GPM AT CONDITIONS			1523	24	1370		707	

PP-224 SUMP PUMP
PP-216 A/S LIME SLURRY LIQUOR PUMP
PP-216 A/S SUGAR STRIPPER FEED PUMP
PP-226A/S SUGAR STRIPPER REBOILER PUMP
PP-217 A/S SUGAR STRIPPER PUMP
PP-218 A/S AQUEOUS FURFURAL PUMP

NOTES:

1. IMPINGEMENT BAFFLE SUPPORTED INTERNALLY.
2. 0.5" PER FT SLOPE TO SUMP. PERIODIC REMOVAL OF SUMP SOLIDS REQUIRED.
3. HYDROSTATICALLY BALANCED OUTLET BAFFLE.
4. MF-222 NORMALLY OPERATES HALF FULL.
5. INTERMITTENT BATCH OPERATION.
6. INCLUDE DRAW-OUT LINE FOR ANY IMMISCIBLE LAYER (NOT SHOWN).

LEGEND:

- TEMPERATURE °F
- PRESSURE, PSIG
- STREAM NO.

TABLE STREAM FLOWS IN LB/HR.

BASE CASE 25MM GAL/YEAR

2	1/75	FOR FINAL REPORT
1		PRELIMINARY FOR ESTIMATE

BADGER ENGINEERS, INC.
CAMBRIDGE, MASS.

PROCESS FLOW DIAGRAM
ACID HYDROLYSIS UNIT 200 (SHEET 4 OF 8)
SUGAR STRIPPING
SOLAR ENERGY RESEARCH INSTITUTE
GOLDEN, COLORADO

SCALE: NONE
CERTIFIED
DATE

DWG. NO. E0461-106-5 SHEET 2

MF-224	GS-223	MB-220	GC-227	GS-225	GS-226	MS-218	GA-224	MT-219 A/B	GA-228 A/B	MT-221	MT-223
LIME UNLOADING PIT	LIME UNLOADING CONVEYOR	LIME STORAGE BIN	LIME DUST CYCLONE	LIME SOLIDS FEEDER	LIME MIXING CONVEYOR	LIME MIX TANK	LIME MIX TANK AGITATOR	LIME SLURRY DAY TANKS	LIME SLURRY DAY TANK AGITATOR	SULPHURIC ACID DAY TANK	HYDROLYSIS PROCESS WATER TANK

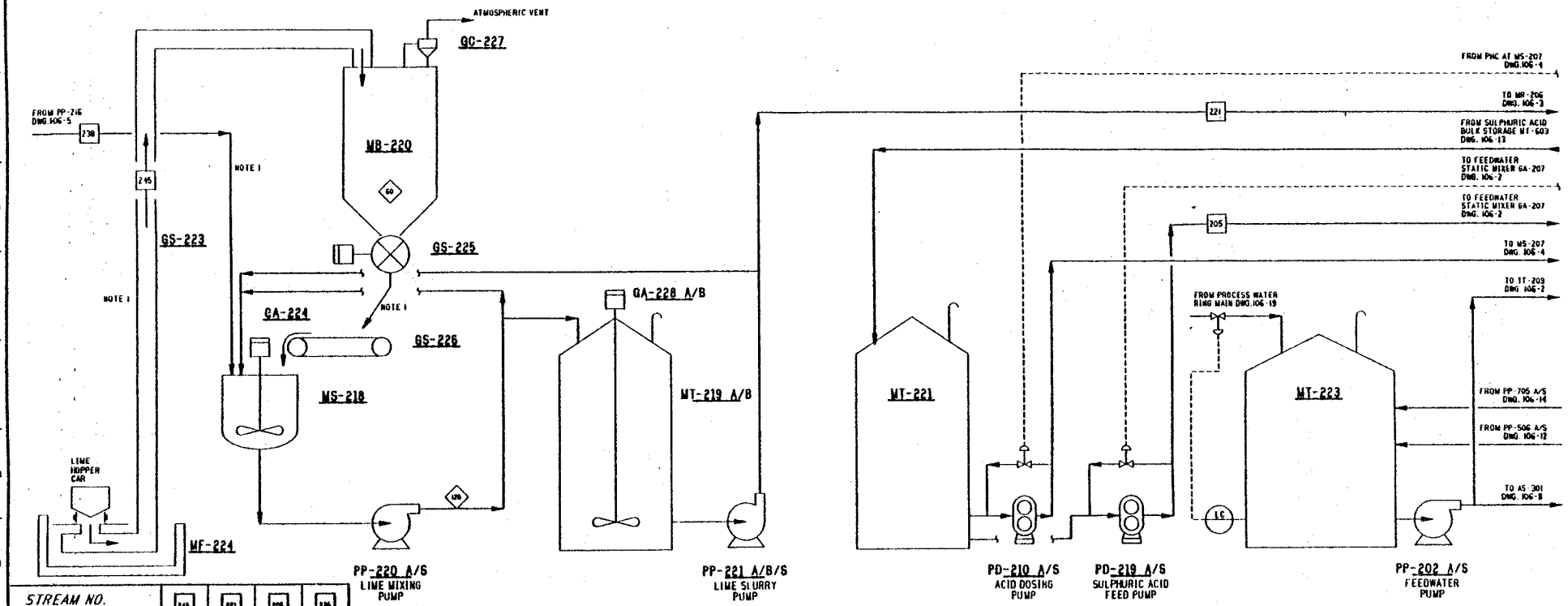

STREAM NO. / COMPONENTS	MW	246	221	208	226
WOOD (DRY)	800				
FURFURAL	96		46		46
ACETIC ACID	60				
ALPHA-PINENE	136		35		35
WATER	18		10470		10470
FORMIC ACID	46				
LEVULINIC ACID	116		11		11
HMF	126		208		208
OLEIC ACID	282		52		52
SULFURIC ACID	98			5004	
LIGNIN	5000				
ASH	100		9		9
HEXOSE SUGARS	180		720		720
ANHYDROPYRANOSE	162		218		218
TAR (SOLUBLE)	400				
TAR (INSOLUBLE)	400				
CALCIUM HYDROXIDE	74	5067	5067		
CALCIUM FORMATE	130		14		14
CALCIUM ACETATE	158		12		12
GYPSUM	172				
CALCIUM LEVULINATE	270		25		25
TOTAL - LB/HR.		5067	16887	5004	11820
TOTAL - LB MOL/HR					
GPM AT CONDITIONS			28	6	24

NOTES:

1. INTERMITTENT BATCH OPERATION.

LEGEND:

- TEMPERATURE °F
- PRESSURE, PSIG
- STREAM NO.

TABLE STREAM FLOWS IN LB/HR.

BASE CASE 25MW GAL/YEAR

2	7/15	FOR FINAL REPORT
1	5-1-79	PRELIMINARY FOR ESTIMATE

BADGER ENGINEERS, INC.
CAMBRIDGE, MASS.

PROCESS FLOW DIAGRAM
ACID HYDROLYSIS UNIT 200 (SHEET 6 OF 6)
LIME AND SULPHURIC ACID PREPARATION
SOLAR ENERGY RESEARCH INSTITUTE
GOLDEN COLORADO

SCALE: NONE
CERTIFIED
DATE

DWG. NO. E0461-106-6 | 2

GA-305 PBM TANK AGITATOR | MS-305 A/B PBM TANK | MS-304 AIR RECEIVER | TP-304 AIR HEATER | GF-301 / GF-302 AIR FILTER | MR-301 A/B NO. 1 FERMENTOR | GF-303 A/B NO. 1 AUTO STRAINER | TY-302 A/B NO. 1 BROTH COOLER | MR-302 A/B NO. 2 FERMENTOR | GF-304 A/B NO. 2 AUTO STRAINER | TY-303 A/B NO. 2 BROTH COOLER | MF-306 BLOWDOWN PIT | GY-318 EMERGENCY CHILLER (PACKAGE UNIT)

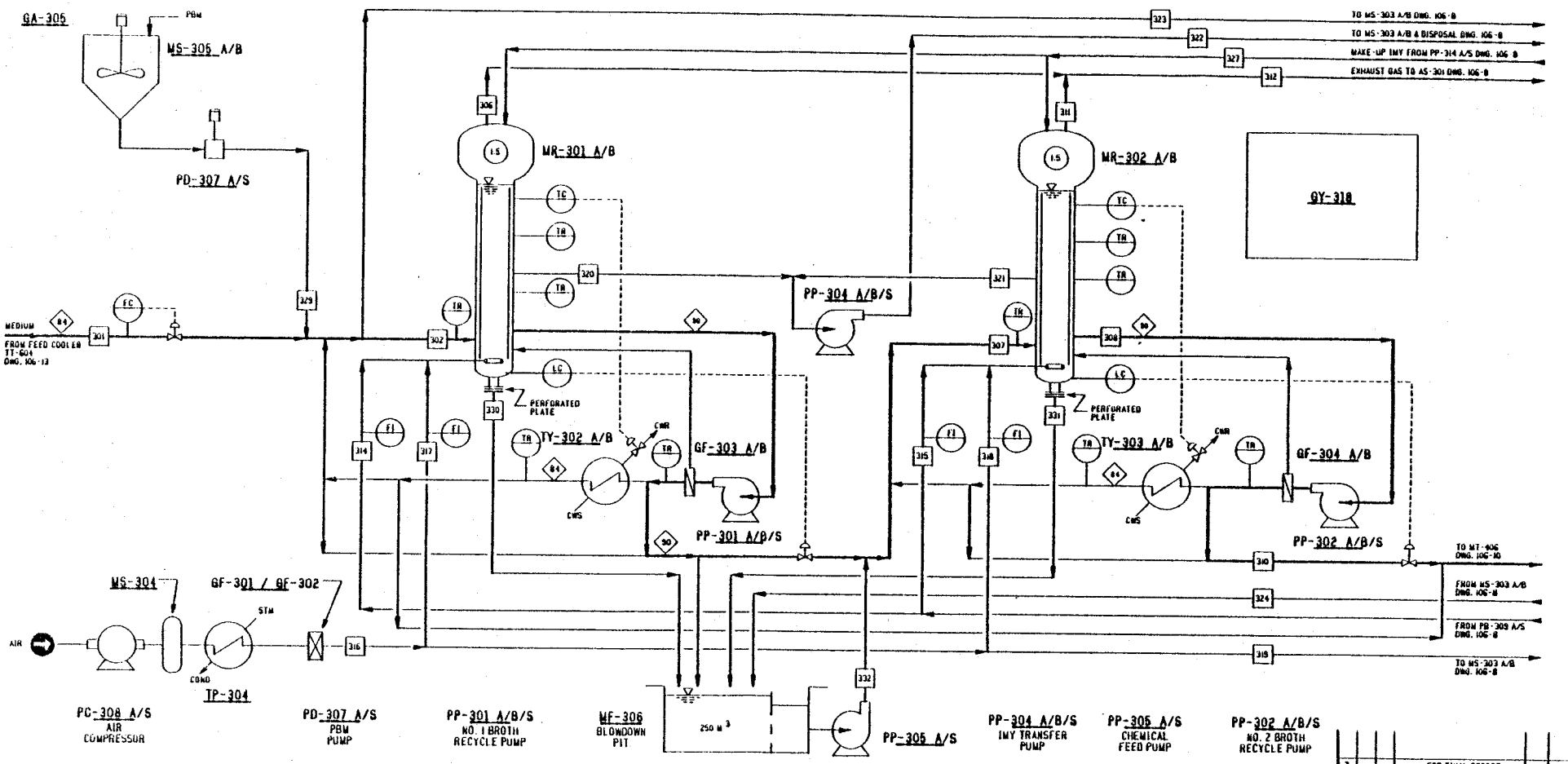

PC-308 A/S AIR COMPRESSOR | PD-307 A/S PBM PUMP | PP-301 A/B/S NO. 1 BROTH RECYCLE PUMP | MF-306 BLOWDOWN PIT | PP-305 A/S | PP-304 A/B/S IMY TRANSFER PUMP | PP-305 A/S CHEMICAL FEED PUMP | PP-302 A/B/S NO. 2 BROTH RECYCLE PUMP

UNSTABLE OPERATION

STREAM NO. / COMPONENTS	MW	301	302				306	307	308		310	311	312		314	315	316	317	318	319	320	321	322	323	324	327	328	330	331	332
ALCOHOL	46	0	7645					15422	18141		21749																			
SUGAR	180	45236	78597					6377	765		917																			
WATER	18	585542	570078					450805	450809		588474																			
OTHERS	–	37244	38657					33659	33758		40351																			
CO_2	44						9775					8033	17808		1525	1525										600				
AIR	29						400					400	800														600			
TOTAL - LB/HR		668422	674979				10168	546264	543513		650614	8433	18608		1525	1525	1599	400	400	100										
TOTAL - LB MOL/HR							236					192	423		35	35	55	14	14	3						1200				
GPM AT CONDITIONS		1341	1311					1110	1105		1325										430	430	430	69	430	285	2.5		256	

BASE CASE 26MM GAL/YEAR

LEGEND:
- TEMPERATURE °F
- PRESSURE, PSIG
- STREAM NO.

TABLE STREAM FLOWS IN LB/HR.

NO.	BY	DESCRIPTION OF ISSUE	DATE	APP.
2	MS	FOR FINAL REPORT		
1		PRELIMINARY FOR ESTIMATE		

BADGER ENGINEERS, INC.
CAMBRIDGE, MASS.

PROCESS FLOW DIAGRAM
FERMENTATION UNIT 300 (SHEET 1 OF 8)
FERMENTATION
SOLAR ENERGY RESEARCH INSTITUTE
GOLDEN COLORADO

SCALE: NONE
CERTIFIED DATE
DWG. NO. E0461-106-7 ISSUE 2

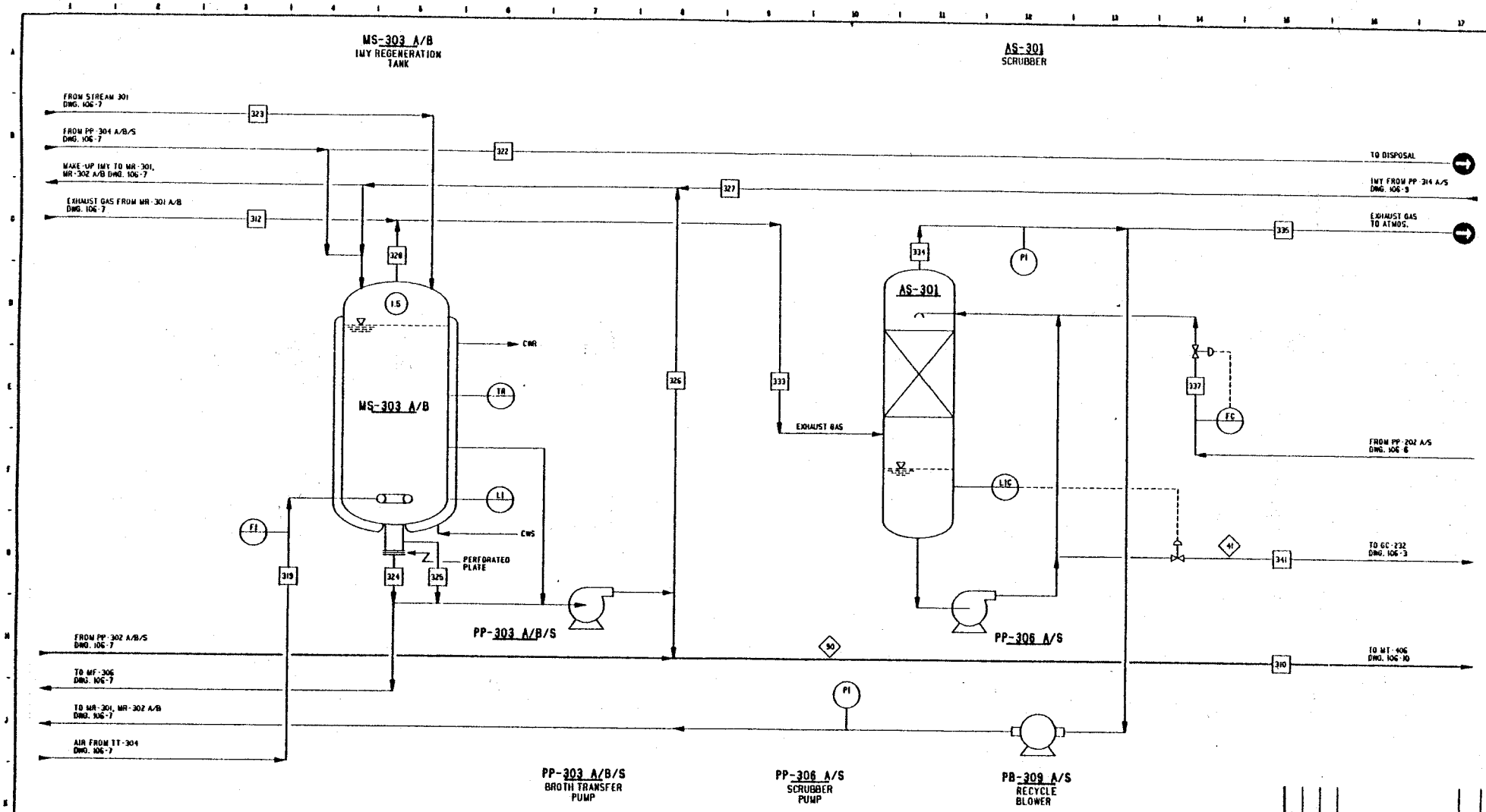

UNSTABLE OPERATION

STREAM NO.		308	312		319	322	323	324	325	326	327	328	333	334	326		337			341	
COMPONENTS	MW																				
ALCOHOL		21755																			
SUGAR		917																			
WATER		58858															115078			120264	
OTHERS		40532																			
CO_2			14050									2063	28101	28101	19871						
AIR			800		100								1599	1599	1599						
TOTAL - LB/HR.		651785	14850		100							2063	29700	29700	21470		115078			120264	
TOTAL - LB MOL/HR			347		3							47	694	694	488						
GPM AT CONDITIONS		1325				438	63	438	438	438	285						230			240	

2	7/15	FOR FINAL REPORT
1		PRELIMINARY FOR ESTIMATE

BADGER ENGINEERS, INC.
CAMBRIDGE, MASS.

PROCESS FLOW DIAGRAM
FERMENTATION UNIT 300 (SHEET 2 OF 3)
IMY REGENERATION
SOLAR ENERGY RESEARCH INSTITUTE
GOLDEN COLORADO

SCALE: NONE
CERTIFIED DATE

DWG. NO. E0461-106-8 2

MS-311 RESIN TANK
GA-314 RESIN TANK AGITATOR
MS-312 YEAST LIQUID TANK
GA-315 YEAST LIQUID TANK AGITATOR
GA-311 LINE MIXER
MS-313 ALGINATE TANK
GA-316 ALGINATE TANK AGITATOR
GZ-312 YEAST IMMOBILIZING UNIT (PACKAGE UNIT)
GY-313 CHILLER UNIT
MS-314 CA-TANK
GA-317 CA-TANK AGITATOR

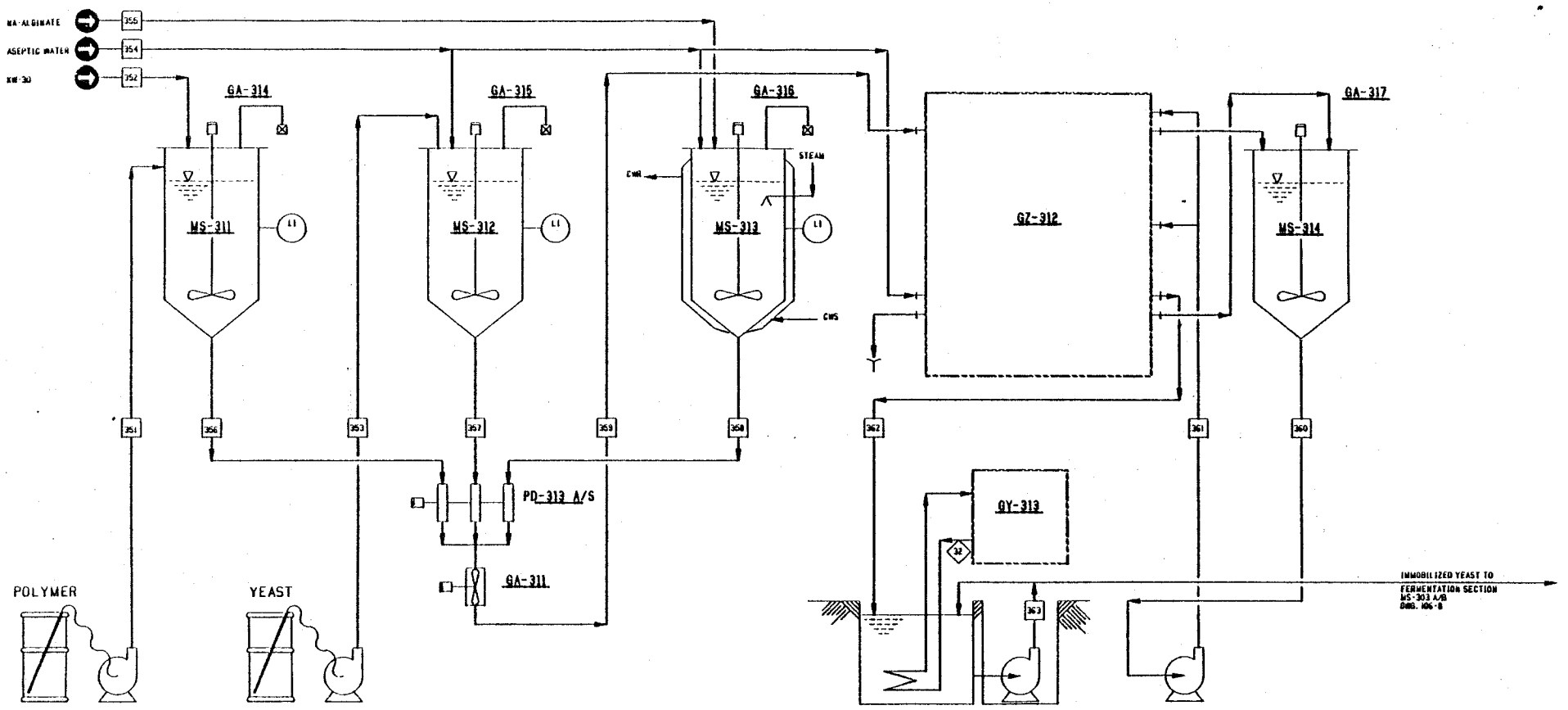

STREAM NO. / COMPONENTS	MW	351	352	353	354	355	356	357	358	359	360	361	362	363		
POLYMER		1143					36			36						
KM-30							0.35			0.35						
YEAST				286				1.79		1.79						
WATER		1715		2574	1127		54	25	26.3	405	534	267	123			
SODIUM ALGINATE									0.53	0.53						
CALCIUM CHLORIDE											16.1	8.1				
TOTAL		2858		2860	1127		90.4	26.8	26.8	143.7	550	275	192	41000		
GPM		5		6	2		0.17	0.05	0.05	0.28	1.1	0.55	0.61	82		
BATCH OPERATION																

LEGEND:
- ◇ TEMPERATURE °F
- ○ PRESSURE, PSIG
- □ STREAM NO.

TABLE STREAM FLOWS IN LB/HR.

BASE CASE 25MM GAL/YEAR

NO.	DATE	DESCRIPTION
2	1/15	FOR FINAL REPORT
1		PRELIMINARY FOR ESTIMATE

BADGER ENGINEERS, INC.
CAMBRIDGE, MASS.

PROCESS FLOW DIAGRAM
FERMENTATION UNIT 300 (SHEET 3 OF 3)
IMY PRODUCTION
SOLAR ENERGY RESEARCH INSTITUTE
GOLDEN COLORADO

SCALE: NONE
CERTIFIED
DATE

DWG. NO. E0461-106-9 SHEET 2

MT-406
DILUTE BEER FEED TANK

II-402
DEGASSER DRUM CONDENSER

MS-401
DEGASSER DRUM

AS-401
BEER COLUMN

TT-403 A/B
BEER COLUMN REBOILERS

II-412
AQUEOUS FURFURAL COOLER

II-413
FEED PREHEATER

II-406
BEER COLUMN CONDENSER

MS-402
BEER COLUMN REFLUX DRUM

II-406
BEER COLUMN VENT CONDENSER

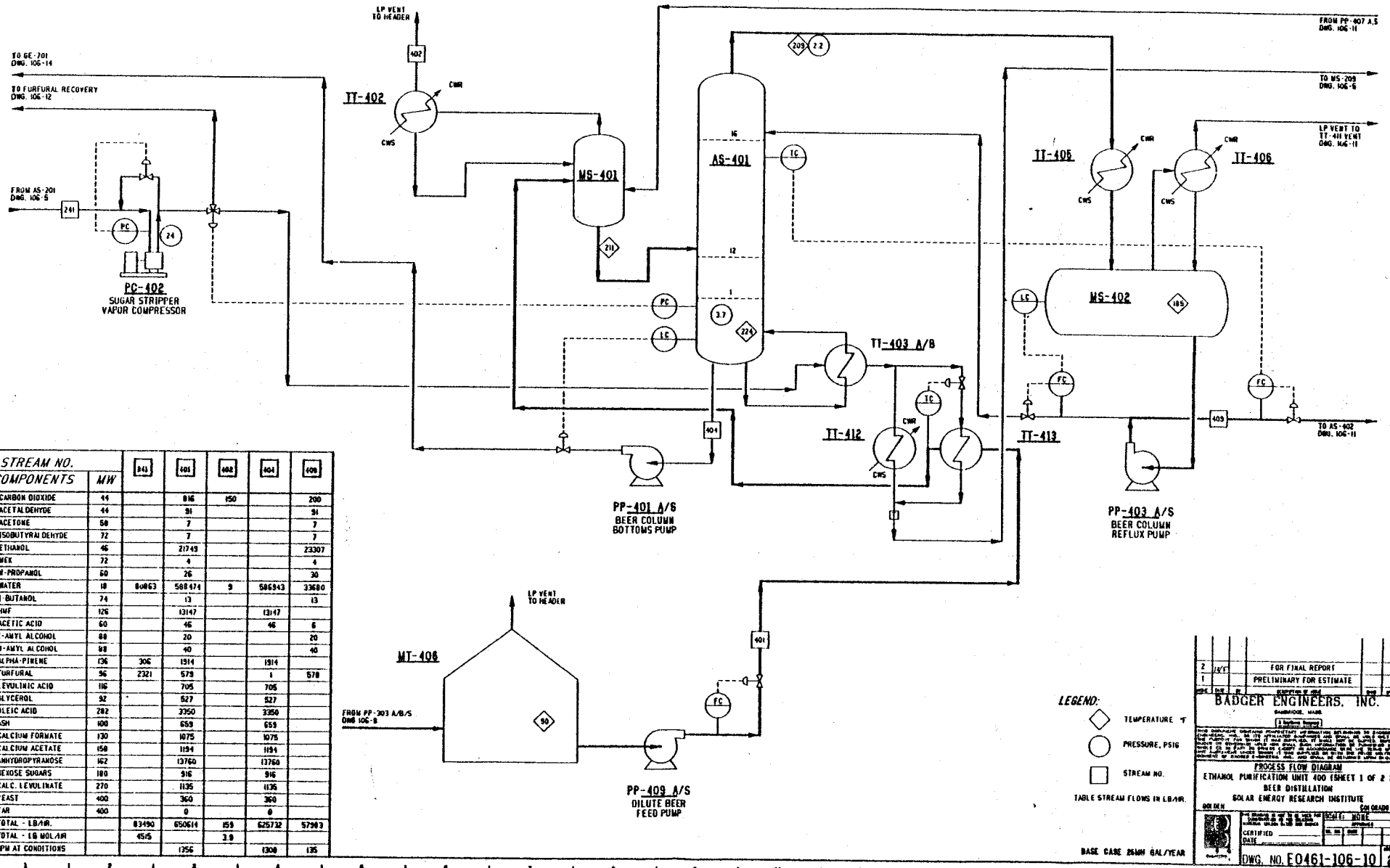

STREAM NO. / COMPONENTS	MW	241	401	402	404	409
CARBON DIOXIDE	44		816	150		200
ACETALDEHYDE	44		91			91
ACETONE	58		7			7
ISOBUTYRALDEHYDE	72		7			7
ETHANOL	46		23749			23307
MEK	72		4			4
N-PROPANOL	60		26			30
WATER	18	80863	588474	9	586943	33680
I-BUTANOL	74		13			13
HMF	126		13147		13147	
ACETIC ACID	60		46		46	6
I-AMYL ALCOHOL	88		20			20
N-AMYL ALCOHOL	88		40			40
ALPHA-PINENE	136	306	1914		1914	
FURFURAL	96	2321	579		1	578
LEVULINIC ACID	116		705		705	
GLYCEROL	92		527		527	
OLEIC ACID	282		3350		3350	
ASH	100		659		659	
CALCIUM FORMATE	130		1075		1075	
CALCIUM ACETATE	158		1194		1194	
ANHYDROPYRANOSE	162		13760		13760	
HEXOSE SUGARS	180		916		916	
CALC. LEVULINATE	270		1135		1135	
YEAST	400		360		360	
TAR	400		0		0	
TOTAL - LB/HR.		83490	650614	159	625732	57963
TOTAL - LB MOL/HR		4515		3.9		
GPM AT CONDITIONS			1356		1308	135

LEGEND:
- TEMPERATURE °F
- PRESSURE, PSIG
- STREAM NO.

TABLE STREAM FLOWS IN LB/HR.

BASE CASE 25MM GAL/YEAR

2	12/87	FOR FINAL REPORT
1		PRELIMINARY FOR ESTIMATE

BADGER ENGINEERS, INC.
CAMBRIDGE, MASS.

PROCESS FLOW DIAGRAM
ETHANOL PURIFICATION UNIT 400 (SHEET 1 OF 2)
BEER DISTILLATION
SOLAR ENERGY RESEARCH INSTITUTE
GOLDEN COLORADO

SCALE: NONE
CERTIFIED
DATE

DWG. NO. E0461-106-10 2

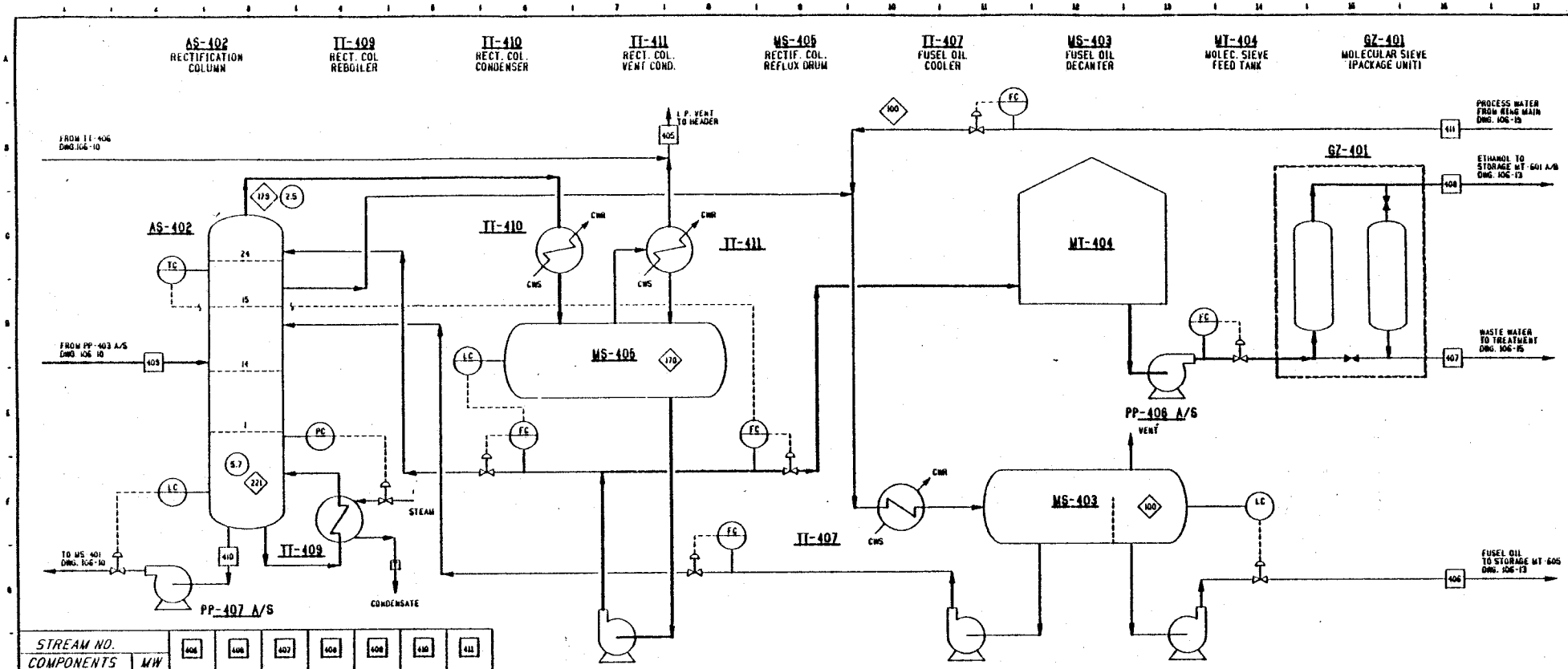

STREAM NO. / COMPONENTS	MW	406	408	407	408	408	410	411
CARBON DIOXIDE	44	666				200		
ACETALDEHYDE	44	2			89	91		
ACETONE	58	1			6	7		
ISOBUTYRALDEHYDE	72				7	7		
ETHANOL	46	100	100		21549	23307	1658	
MEK	72				4	4		
N-PROPANOL	60		25		1	30	5	
WATER	18	8	54	1954		33680	45633	494
I-BUTANOL	74		13			13		
HMF	126							
ACETIC ACID	60					6	9	
I-AMYL ALCOHOL	88		20			20		
N-AMYL ALCOHOL	88		40			40		
ALPHA-PINENE	136							
FURFURAL	96		578			578		
LEVULINIC ACID	116							
GLYCEROL	92							
OLEIC ACID	282							
ASH	100							
CALCIUM FORMATE	130							
CALCIUM ACETATE	158							
ANHYDROPYRANOSE	162							
HEXOSE SUGARS	180							
CALC. LEVULINATE	270							
YEAST	400							
TAR	400							
TOTAL - LB/HR		777	830	1954	21656	57983	47305	494
TOTAL - LB MOL/HR		17						
GPM AT CONDITIONS			1.5	4	55	135	105	1

LEGEND:

◇ TEMPERATURE °F

○ PRESSURE, PSIG

□ STREAM NO.

TABLE STREAM FLOWS IN LB/HR.

BASE CASE 25MM GAL/YEAR

2	1/4/5	FOR FINAL REPORT
1		PRELIMINARY FOR ESTIMATE

BADGER ENGINEERS, INC.

PROCESS FLOW DIAGRAM

ETHANOL PURIFICATION UNIT 400 (SHEET 2 OF 2)

RECTIFICATION AND DEHYDRATION

SOLAR ENERGY RESEARCH INSTITUTE

GOLDEN COLORADO

SCALE: NONE

CERTIFIED

DATE

DWG. NO. E0461-106-11 2

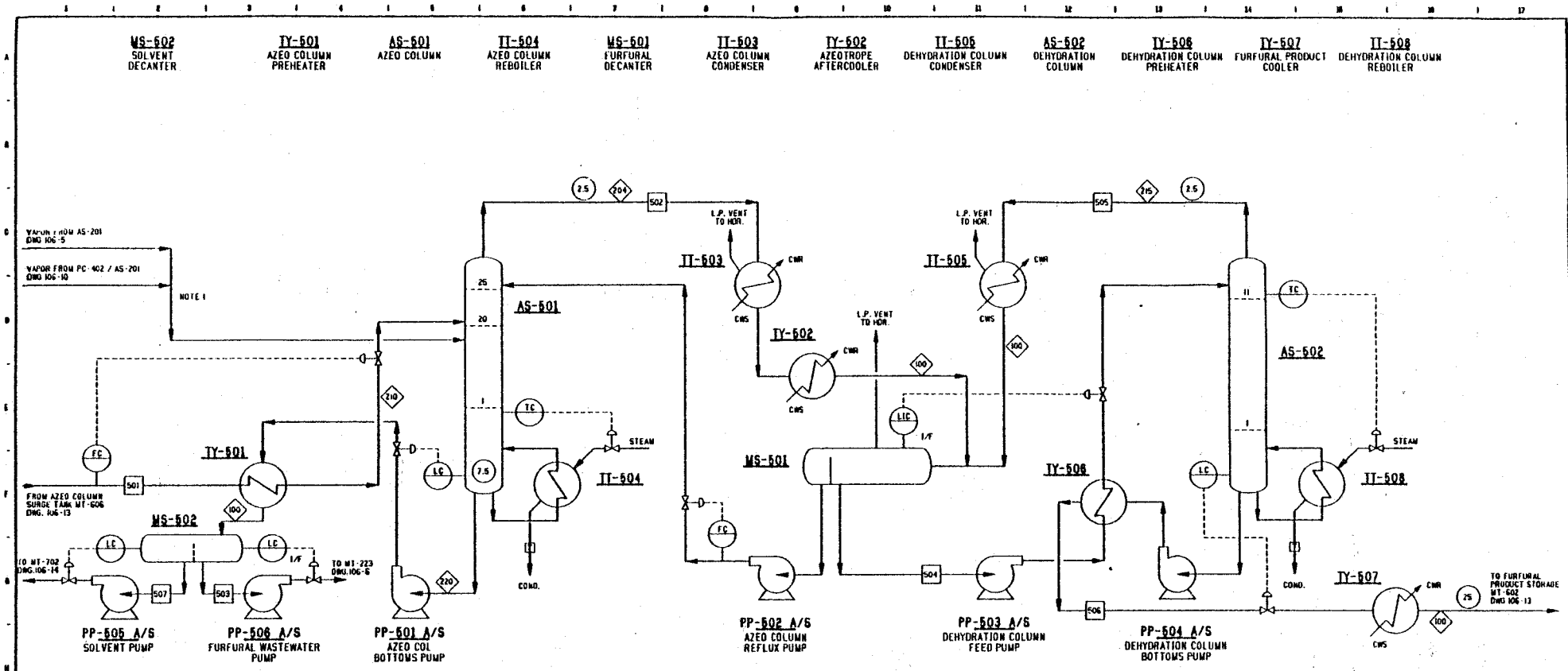

STREAM NO. / COMPONENTS	MW	501	502	503	504	505	506	507	
WOOD (DRY)	800								
FURFURAL	96	16367	16203	164	16203		16203		
ACETIC ACID	60	404		404					
ALPHA-PINENE	136	1379		394				985	
WATER	18	323891	30091	323810	3087	3006	81		
FORMIC ACID	46	192		192					
LEVULINIC ACID	116	5		5					
HMF	126								
OLEIC ACID	282	1		1					
SULFURIC ACID	98	1		1					
LIGNIN	5000								
ASH	100								
HEXOSE SUGARS	180								
ANHYDROPYRANOSE	162								
TAR (SOLUBLE)	400								
TAR (INSOLUBLE)	400								
CALCIUM HYDROXIDE	74								
CALCIUM FORMATE	130								
CALCIUM ACETATE	158								
GYPSUM	172								
CALCIUM LEVULINATE	270								
TOTAL - LB/HR.		342240	46294	324971	19290	3006	16284	985	
TOTAL - LB MOL/HR			1852			167			
GPM AT CONDITIONS		710		693	38		25	2	

NOTES:
1. UPSET OPERATION.

LEGEND:
- TEMPERATURE °F
- PRESSURE, PSIG
- STREAM NO.

TABLE STREAM FLOWS IN LB/HR.

BASE CASE 25MM GAL/YEAR

2	12/85	FOR FINAL REPORT
1		PRELIMINARY FOR ESTIMATE

BADGER ENGINEERS, INC.
CAMBRIDGE, MASS.

PROCESS FLOW DIAGRAM
FURFURAL RECOVERY UNIT 500
AZEO AND DEHYDRATION
SOLAR ENERGY RESEARCH INSTITUTE
GOLDEN

SCALE: NONE
CERTIFIED
DATE

DWG. NO. E0461-106-12 | 2

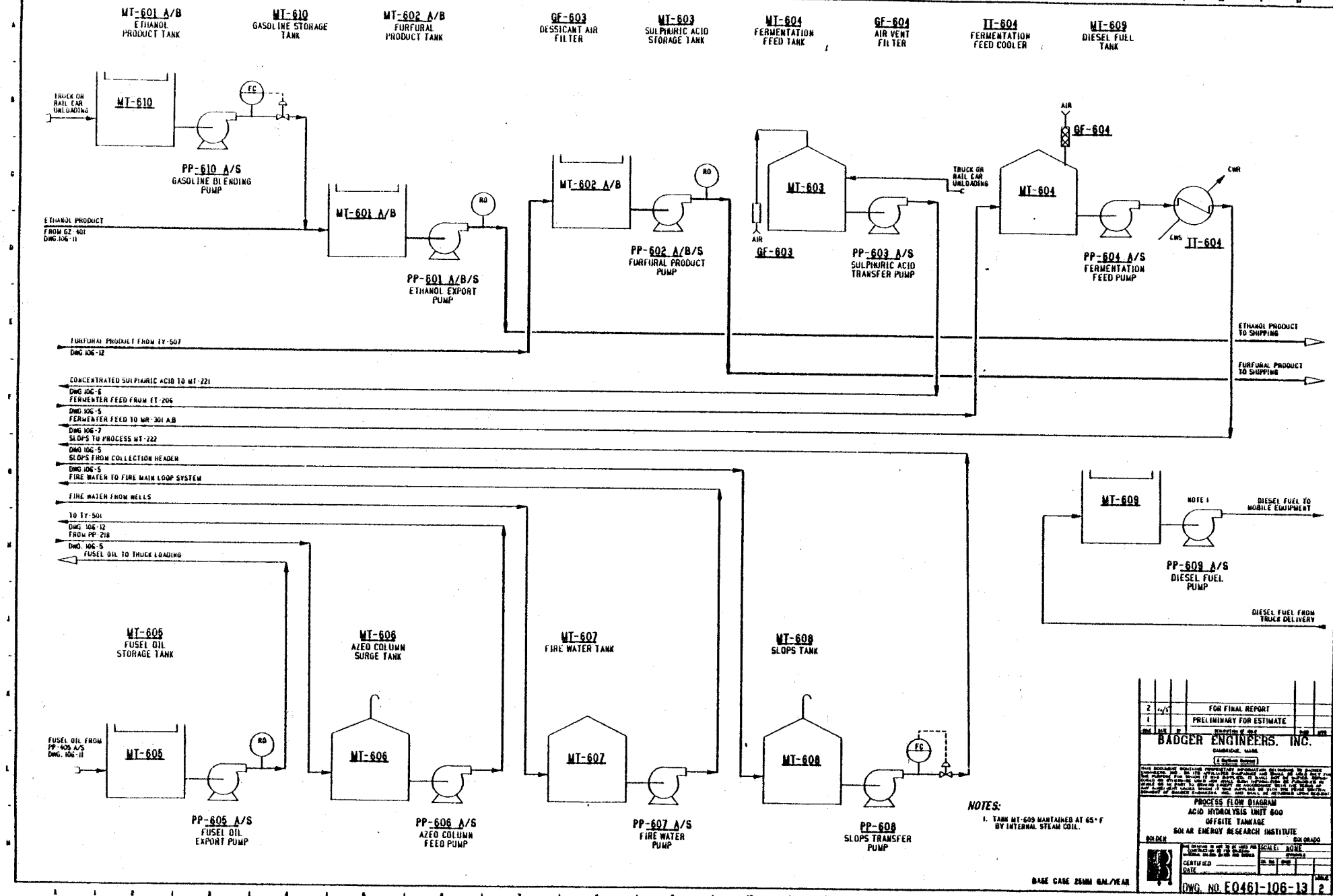
MT-601 A/B
ETHANOL PRODUCT TANK
MT-610
GASOLINE STORAGE TANK
MT-602 A/B
FURFURAL PRODUCT TANK
GF-603
DESSICANT AIR FILTER
MT-603
SULPHURIC ACID STORAGE TANK
MT-604
FERMENTATION FEED TANK
GF-604
AIR VENT FILTER
IT-604
FERMENTATION FEED COOLER
MT-609
DIESEL FUEL TANK
TRUCK OR RAIL CAR UNLOADING
MT-610
PP-610 A/S
GASOLINE BLENDING PUMP
ETHANOL PRODUCT FROM GZ-401 DWG 106-11
MT-601 A/B
PP-601 A/B/S
ETHANOL EXPORT PUMP
MT-602 A/B
PP-602 A/B/S
FURFURAL PRODUCT PUMP
AIR
GF-603
MT-603
PP-603 A/S
SULPHURIC ACID TRANSFER PUMP
TRUCK OR RAIL CAR UNLOADING
AIR
GF-604
MT-604
PP-604 A/S
FERMENTATION FEED PUMP
CWR
CWS
IT-604
ETHANOL PRODUCT TO SHIPPING
FURFURAL PRODUCT TO SHIPPING
FURFURAL PRODUCT FROM TY-507 DWG 106-12
CONCENTRATED SULPHURIC ACID TO MT-221
DWG 106-6
FERMENTER FEED FROM ET-206
DWG 106-5
FERMENTER FEED TO MR-301 A,B
DWG 106-7
SLOPS TO PROCESS MT-222
DWG 106-5
SLOPS FROM COLLECTION HEADER
DWG 106-5
FIRE WATER TO FIRE MAIN LOOP SYSTEM
FIRE WATER FROM WELLS
TO TY-501
DWG 106-12
FROM PP-218
DWG. 106-5
FUSEL OIL TO TRUCK LOADING
MT-609
NOTE 1
DIESEL FUEL TO MOBILE EQUIPMENT
PP-609 A/S
DIESEL FUEL PUMP
DIESEL FUEL FROM TRUCK DELIVERY
MT-605
FUSEL OIL STORAGE TANK
MT-606
AZEO COLUMN SURGE TANK
MT-607
FIRE WATER TANK
MT-608
SLOPS TANK
FUSEL OIL FROM PP-405 A/S DWG. 106-11
MT-605
PP-605 A/S
FUSEL OIL EXPORT PUMP
MT-606
PP-606 A/S
AZEO COLUMN FEED PUMP
MT-607
PP-607 A/S
FIRE WATER PUMP
MT-608
PP-608
SLOPS TRANSFER PUMP
NOTES:
1. TANK MT-609 MAINTAINED AT 65° F BY INTERNAL STEAM COIL.
BASE CASE 25MM GAL/YEAR
2 1/15 FOR FINAL REPORT
1 PRELIMINARY FOR ESTIMATE
BADGER ENGINEERS, INC.
CAMBRIDGE, MASS.
PROCESS FLOW DIAGRAM
ACID HYDROLYSIS UNIT 600
OFFSITE TANKAGE
SOLAR ENERGY RESEARCH INSTITUTE
GOLDEN COLORADO
SCALE: NONE
CERTIFIED DATE
DWG. NO. E0461-106-13 2

GE-701 FIRST EFFECT EVAPORATOR

EI-701 FIRST EFFECT HEATER

GE-702 SECOND EFFECT EVAPORATOR

EI-702 SECOND EFFECT HEATER

GE-703 THIRD EFFECT EVAPORATOR

EI-703 THIRD EFFECT HEATER

EI-704 EVAPORATOR CONDENSER

PE-704 EVAPORATOR VACUUM SYSTEM

TP-706 SOLVENT COOLER

MS-701 HOTWELL DECANTER

EI-705 STILLAGE COOLER

GE-704 ROTARY FILTER

MT-702 MIXED SOLVENT TANK

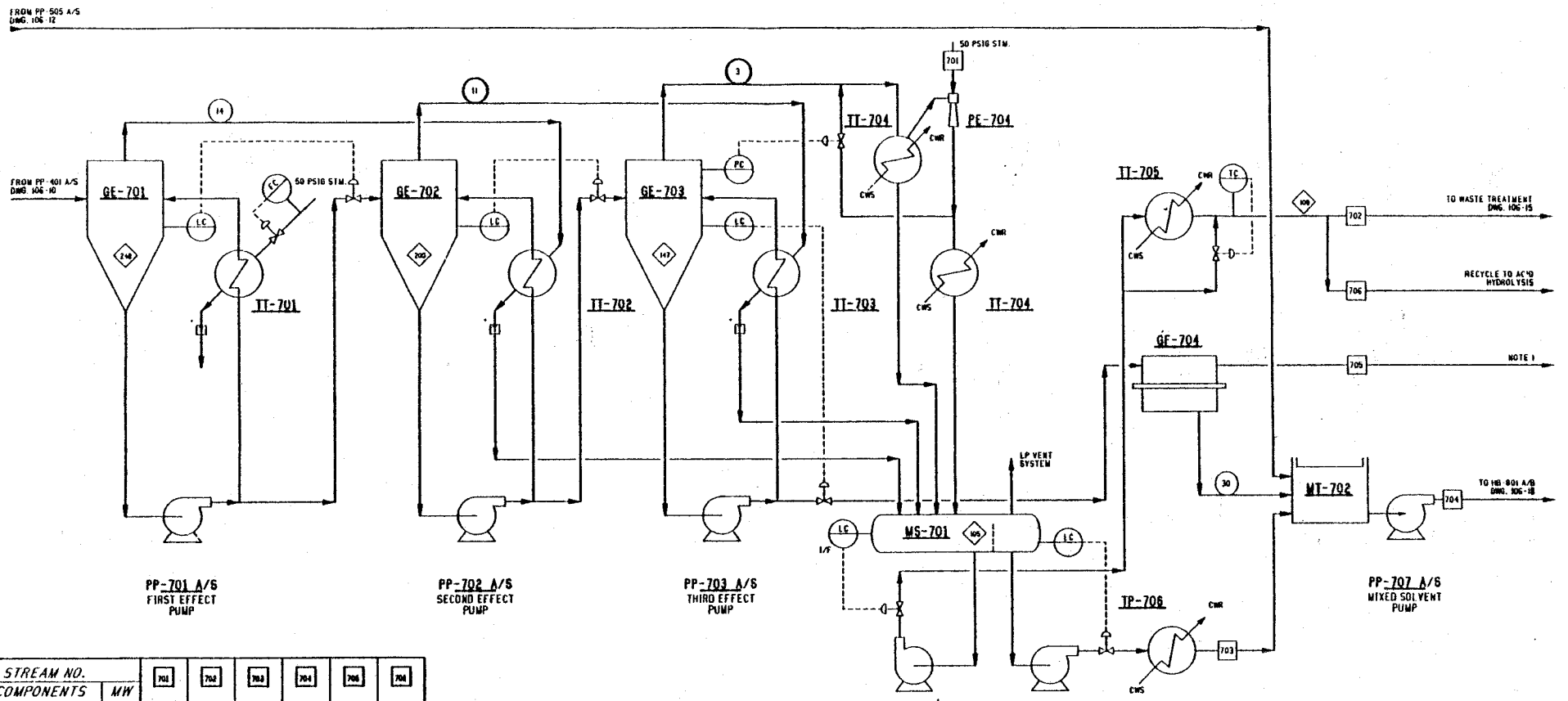

PP-701 A/S FIRST EFFECT PUMP

PP-702 A/S SECOND EFFECT PUMP

PP-703 A/S THIRD EFFECT PUMP

PP-705 A/S EVAPORATOR WASTE WATER PUMP

PP-706 A/S SOLVENT PUMP

PP-707 A/S MIXED SOLVENT PUMP

STREAM NO. / COMPONENTS	MW	701	702	703	704	706	708
WATER	18	1145	230536		24626		272865
FORMIC ACID	46						
HMF	126		1		13145		1
ACETIC ACID	60		23		1		22
ALPHA-PINENE	136		349	1156	2221		329
FURFURAL	96						1
LEVULINIC ACID	116		6		694		6
GLYCEROL	92				527		
OLEIC ACID	282				3350		
SULFURIC ACID	98						
GYPSUM	172					1998	
CALCIUM FORMATE	130				1075		
CALCIUM ACETATE	158				1194		
ANHYDROPYRANOSE	162				13760		
HEXOSE SUGARS	180				916		
CALCIUM LEVULINATE	270				1135		
YEAST	400				360		
TAR	400						
TOTAL - LB/HR.		1145	230977	1156	63003	1998	273223
TOTAL - LB MOL/HR		63.6					
GPM AT CONDITIONS			588	3	123		553

NOTE:

1. SEPARATED SOLIDS CAKE DIRECT TO TRUCK OR STORAGE AREA

LEGEND:

- TEMPERATURE °F
- PRESSURE, PSIG
- PRESSURE, PSIA
- STREAM NO.
- FLOWS IN LB/HR.

BASE CASE 25MM GAL/YEAR

2	11/5	FOR FINAL REPORT
1		PRELIMINARY FOR ESTIMATE

BADGER ENGINEERS, INC.
CAMBRIDGE, MASS.

PROCESS FLOW DIAGRAM
ENVIRONMENTAL - UNIT 700
WASTEWATER TREATMENT
SOLAR ENERGY RESEARCH INSTITUTE
GOLDEN COLORADO

SCALE: NONE

DWG. NO. E0461-106-14 2

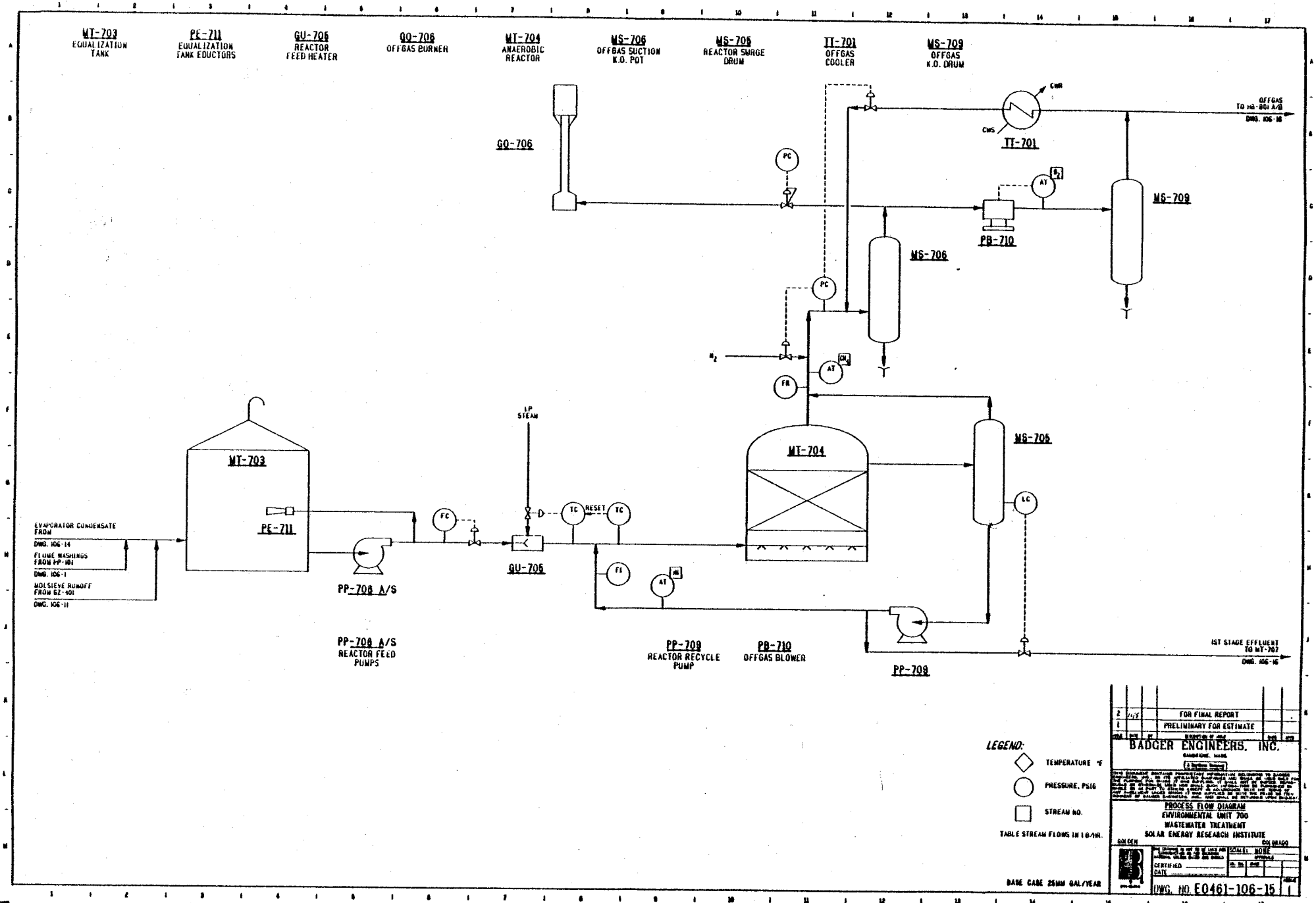
MT-703
EQUALIZATION TANK
PE-711
EQUALIZATION TANK EDUCTORS
GU-705
REACTOR FEED HEATER
GO-706
OFFGAS BURNER
MT-704
ANAEROBIC REACTOR
MS-706
OFFGAS SUCTION K.O. POT
MS-705
REACTOR SURGE DRUM
TT-701
OFFGAS COOLER
MS-709
OFFGAS K.O. DRUM
OFFGAS TO HB-801 A/B
DWG. 106-16
CWR
CWS
TT-701
GO-706
PC
AT
MS-709
PB-710
MS-706
PC
N_2
AT
FR
LP STEAM
MT-704
MS-705
MT-703
PE-711
FC
TC
RESET
TC
LC
EVAPORATOR CONDENSATE FROM
DWG. 106-14
FLUME WASHINGS FROM PP-101
DWG. 106-1
MOLSIEVE RUNOFF FROM GZ-401
DWG. 106-11
PP-708 A/S
GU-705
FI
AT
PP-708 A/S
REACTOR FEED PUMPS
PP-709
REACTOR RECYCLE PUMP
PB-710
OFFGAS BLOWER
PP-708
1ST STAGE EFFLUENT TO MT-707
DWG. 106-16
LEGEND:
TEMPERATURE °F
PRESSURE, PSIG
STREAM NO.
TABLE STREAM FLOWS IN LB/HR.
BASE CASE 25MM GAL/YEAR
2
FOR FINAL REPORT
1
PRELIMINARY FOR ESTIMATE
BADGER ENGINEERS, INC.
PROCESS FLOW DIAGRAM
ENVIRONMENTAL UNIT 700
WASTEWATER TREATMENT
SOLAR ENERGY RESEARCH INSTITUTE
GOLDEN
COLORADO
SCALE: NONE
CERTIFIED
DATE
DWG. NO. E0461-106-15
1

MT-707
BIOTREATER

GV-707
BIOTREATER AERATORS

MS-708
FILTER FEED TANK

GA-712
FILTER FEED TANK AGITATOR

GV-708
SECONDARY CLARIFIER

GV-710
BELT FILTER PRESS

GV-709
POLYMER FEED SYSTEM

GA-711
POLYMER MIXER

MF-709
FILTRATE SUMP

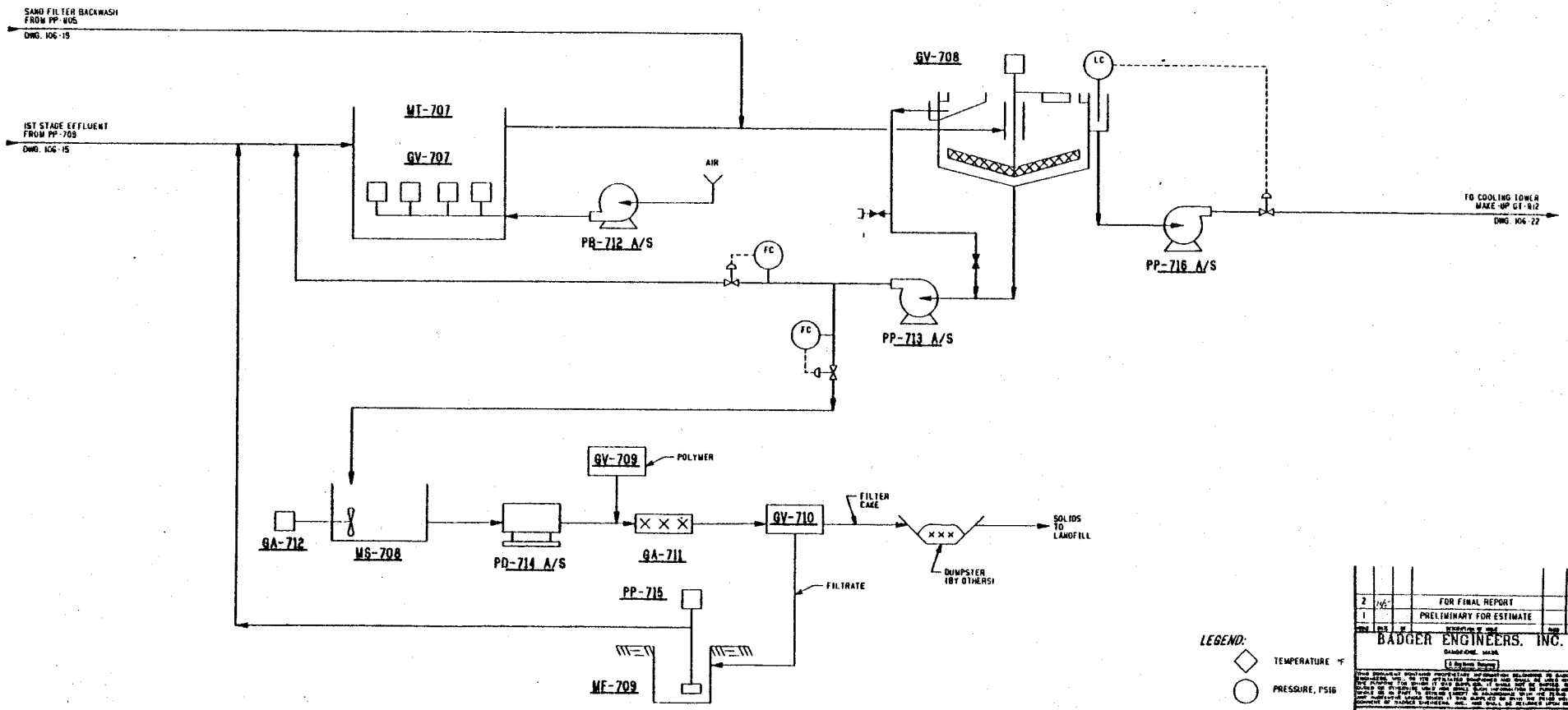

PB-712 A/S
AERATION BLOWERS

PP-713 A/S
SLUDGE PUMPS

PD-714 A/S
FILTER FEED PUMPS

PP-715
FILTRATE SUMP PUMP

PP-716 A/S
FINAL EFFLUENT PUMPS

LEGEND:

◇ TEMPERATURE °F

○ PRESSURE, PSIG

□ STREAM NO.

TABLE STREAM FLOWS IN LB/HR.

BASE CASE 25MM GAL/YEAR

2	1/96	FOR FINAL REPORT
1		PRELIMINARY FOR ESTIMATE

BADGER ENGINEERS, INC.
CAMBRIDGE, MASS.

PROCESS FLOW DIAGRAM
ENVIRONMENTAL - UNIT 700
WASTEWATER TREATMENT
SOLAR ENERGY RESEARCH INSTITUTE
GOLDEN COLORADO

SCALE: NONE
CERTIFIED
DATE

DWG. NO. E0461-106-16 2

MS-710
LP VENT KNOCKOUT DRUM

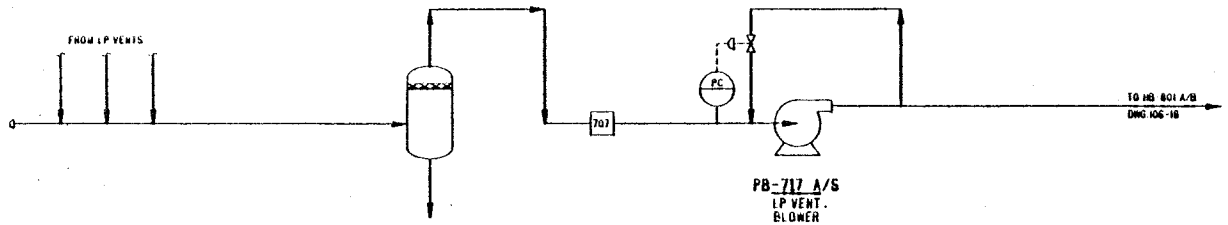

PB-717 A/S
LP VENT.
BLOWER

STREAM NO. / COMPONENTS	MW	707				
AIR	29	615				
CARBON DIOXIDE	44	790				
ACETALDEHYDE	44	2				
ACETONE	58	1				
ETHANOL	46	100				
ALPHA-PINENE	136	1				
WATER	18	18				
TOTAL - LB/HR.		1527				
TOTAL - LB MOL/HR		42.5				
GPM AT CONDITIONS						

LEGEND:
- ◇ TEMPERATURE °F
- ○ PRESSURE, PSIG
- □ STREAM NO.

TABLE STREAM FLOWS IN LB/HR.

BASE CASE 25MM GAL/YEAR

2	4/5	FOR FINAL REPORT
1		PRELIMINARY FOR ESTIMATE

BADGER ENGINEERS, INC.
CAMBRIDGE, MASS.

PROCESS FLOW DIAGRAM
ENVIRONMENTAL - (UNIT 700)
LP VENT SYSTEM
SOLAR ENERGY RESEARCH INSTITUTE
GOLDEN COLORADO

SCALE: NONE
CERTIFIED
DATE

DWG. NO. E0461-106-17 | 2

HB-801 A/B
BOILERS
(WITH FLAKT
SOLID FUEL SYSTEM)

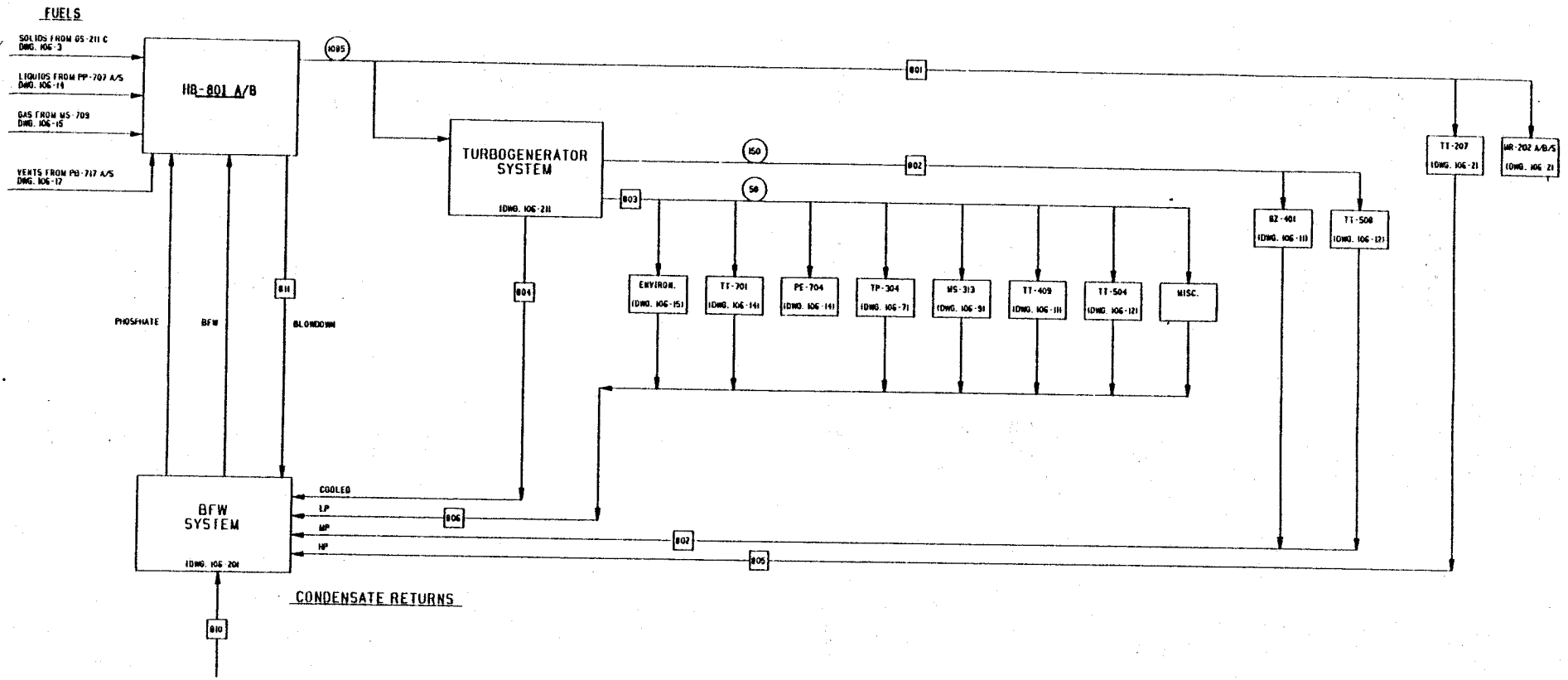

STREAM NO. / COMPONENTS	MW	801	802	803	804	808	806	810	811
WATER		152890	20500	344600	157010	38000	343455	180964	23400
TOTAL - LB/HR.		152890	20500	344600	157010	38000	343455	180964	23400
TOTAL - LB MOL/HR									
GPM AT CONDITIONS									

LEGEND:
- TEMPERATURE °F
- PRESSURE, PSIG
- STREAM NO.

TABLE STREAM FLOWS IN LB/HR.

BASE CASE 25MM GAL/YEAR

2		FOR FINAL REPORT
1		PRELIMINARY FOR ESTIMATE

BADGER ENGINEERS, INC.
CAMBRIDGE, MASS.

PROCESS FLOW DIAGRAM
UTILITIES - UNIT 800
BOILERS AND STEAM DISTRIBUTION
SOLAR ENERGY RESEARCH INSTITUTE
GOLDEN COLORADO

SCALE: NONE
CERTIFIED
DATE

DWG. NO. E0461-106-18

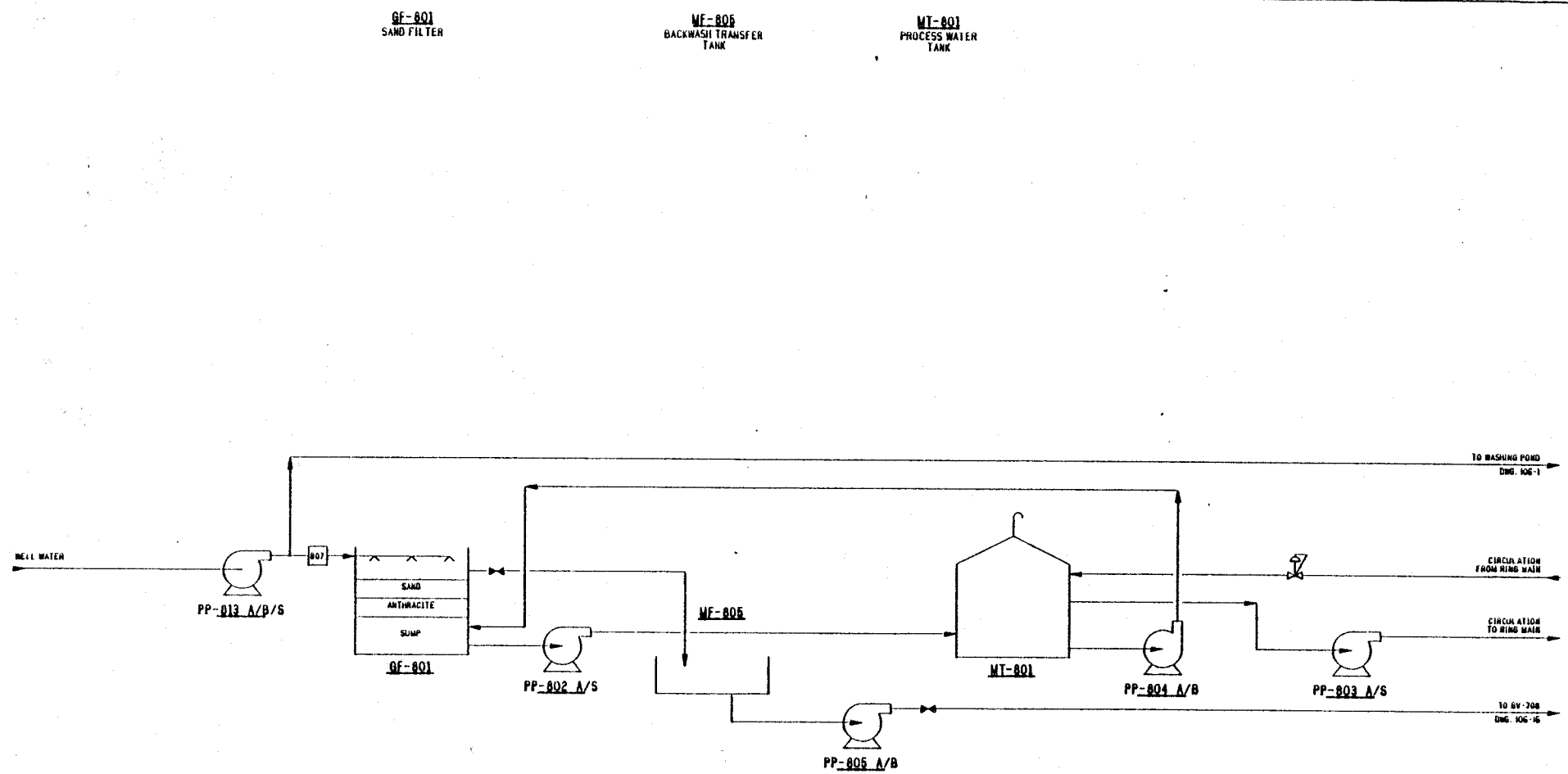

STREAM NO.		807				
COMPONENTS	MW					
WATER						
TOTAL - LB/HR						
TOTAL - LB MOL/HR						
GPM AT CONDITIONS		1700				

PP-813 A/B/S
WELL WATER PUMPS

PP-802 A/S
PROCESS WATER TRANSFER PUMP

PP-805 A/B
BACKWASH TRANSFER PUMPS

PP-804 A/B
BACKWASH FEED PUMPS

PF-803 A/S
PROCESS WATER CIRCULATING PUMP

LEGEND:

◇ TEMPERATURE °F

○ PRESSURE, PSIG

□ STREAM NO.

TABLE STREAM FLOWS IN LB/HR.

BASE CASE 25MM GAL/YEAR

2	1/4/1	FOR FINAL REPORT	
1		PRELIMINARY FOR ESTIMATE	

BADGER ENGINEERS, INC.
CAMBRIDGE, MASS.

PROCESS FLOW DIAGRAM
UTILITIES UNIT 800
PROCESS WATER SYSTEM
SOLAR ENERGY RESEARCH INSTITUTE
GOLDEN COLORADO

SCALE: NONE

CERTIFIED
DATE

DWG. NO. E0461-106-19 2

GU-805 CONDENSATE COLLECTION SYSTEM (PACKAGE UNIT)

GU-804A/S CONDENSATE POLISHER

GU-803A/B DEMINERALIZERS (PACKAGE UNIT)

MS-804 CONDENSATE SURGE DRUM

MS-803 HYDRAZINE DRUM

GU-807 HYDRAZINE ADDITION UNIT (PACKAGE UNIT)

GU-808 AMMONIA ADDITION UNIT (PACKAGE UNIT)

GU-809 PHOSPHATE ADDITION UNIT (PACKAGE UNIT)

GV-806 DEAERATOR

MS-802 BLOWDOWN FLASH DRUM

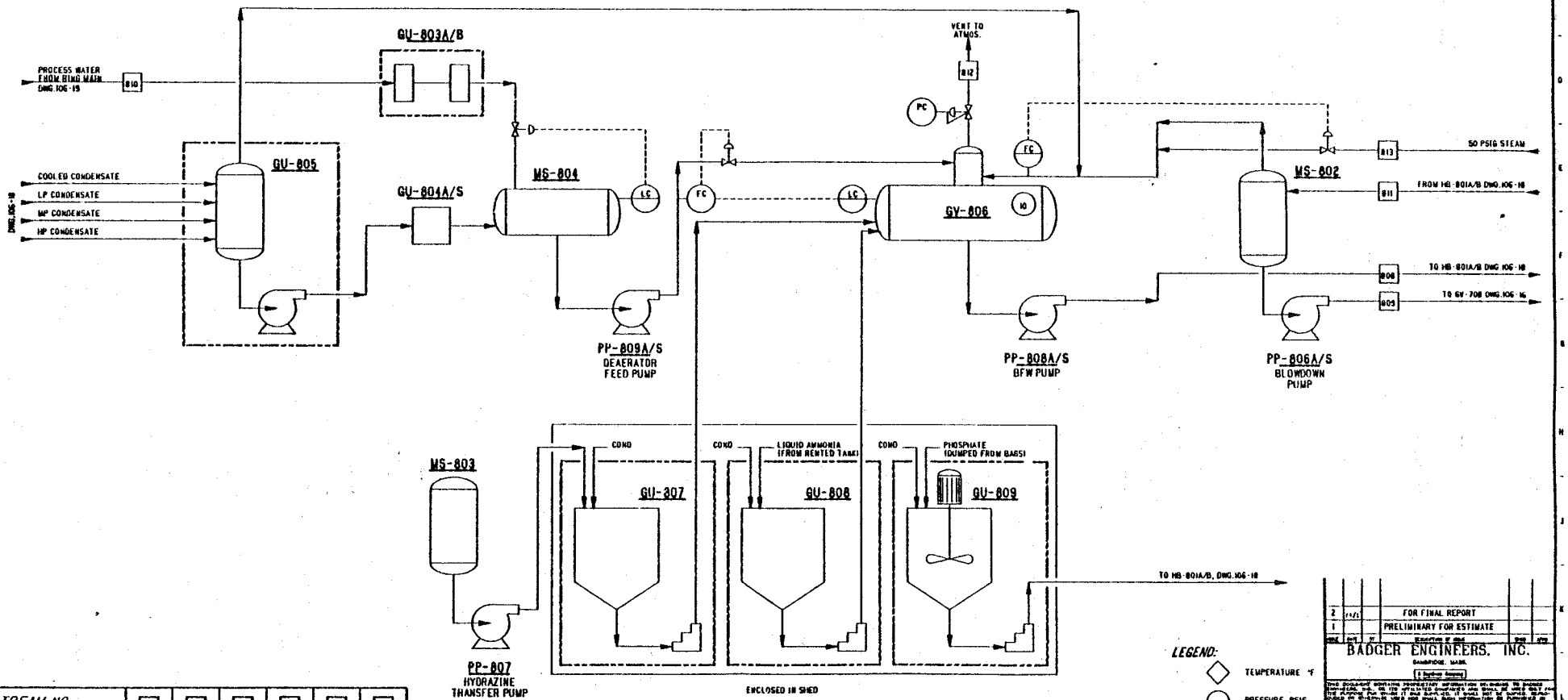

STREAM NO. / COMPONENTS	MW	809	808	810	811	812	813
WATER		776792	15000	180964	23400	10000	15700
TOTAL - LB/HR.		776792	15000	180964	23400	10000	15700
TOTAL - LB MOL/HR							
GPM AT CONDITIONS		1600	30	360	47		

LEGEND:
- TEMPERATURE °F
- PRESSURE, PSIG
- STREAM NO.

TABLE STREAM FLOWS IN LB/HR

BASE CASE 25MW GAL/YEAR

2		FOR FINAL REPORT
1		PRELIMINARY FOR ESTIMATE

BADGER ENGINEERS, INC.
CAMBRIDGE, MASS.

PROCESS FLOW DIAGRAM
UTILITIES - UNIT 800
BFW SYSTEM
SOLAR ENERGY RESEARCH INSTITUTE
GOLDEN COLORADO

SCALE: NONE
CERTIFIED
DATE

DWG. NO. E0461-106-20 2

GZ-811
TURBOGENERATOR
(PACKAGE UNIT INCLUDING
SURFACE CONDENSER
VACUUM EJECTOR SET
AND CONTROLS)

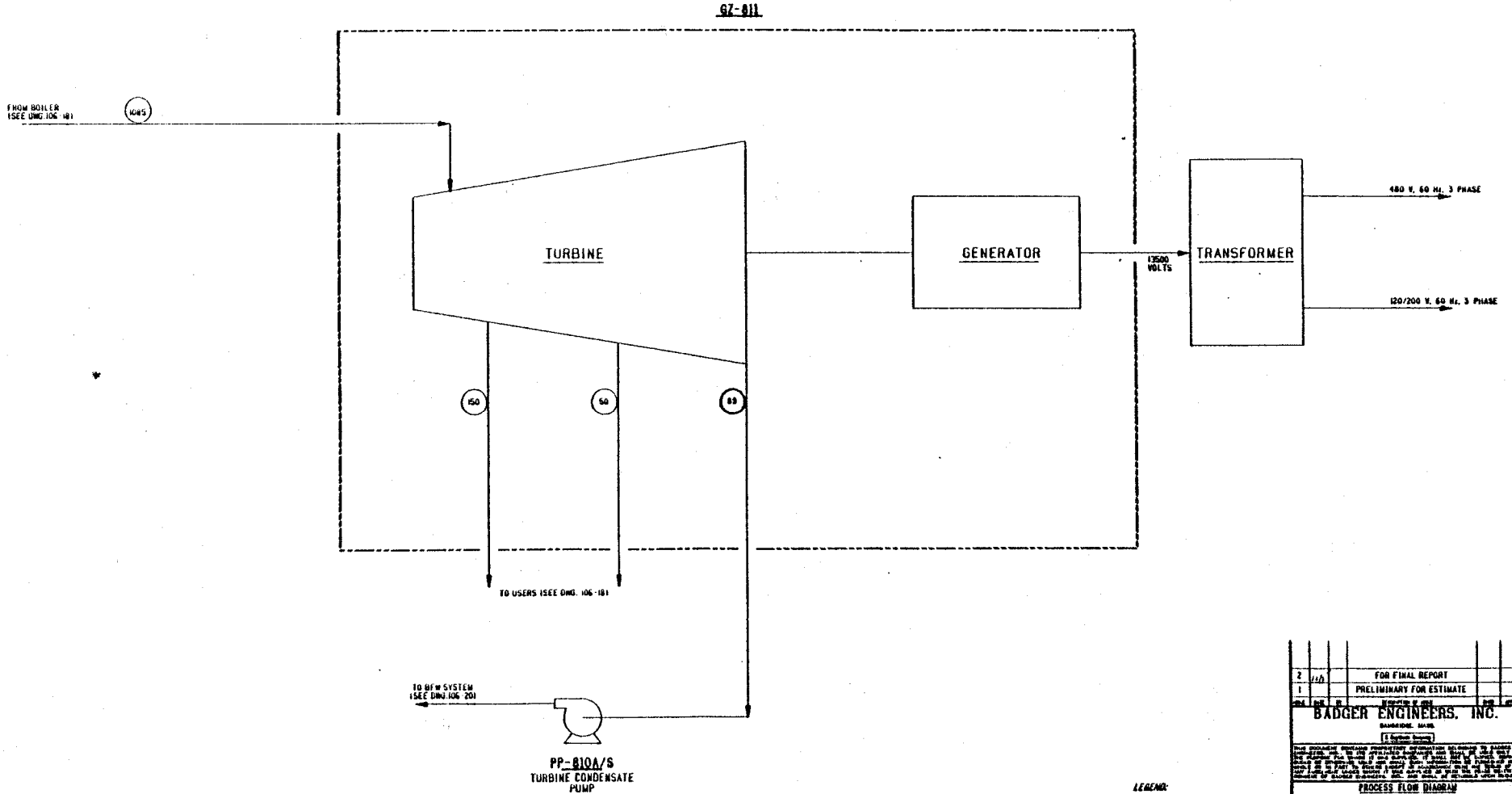

LEGEND:
PSIG
mm Hg

BASE CASE 25MW GAL/YEAR

2		FOR FINAL REPORT	
1		PRELIMINARY FOR ESTIMATE	

BADGER ENGINEERS, INC.
CAMBRIDGE, MASS.

PROCESS FLOW DIAGRAM
UTILITIES - UNIT 800
TURBOGENERATOR
SOLAR ENERGY RESEARCH INSTITUTE
GOLDEN COLORADO

SCALE: NONE
CERTIFIED
DATE

DWG. NO. E0461-106-21 | SHEET 1

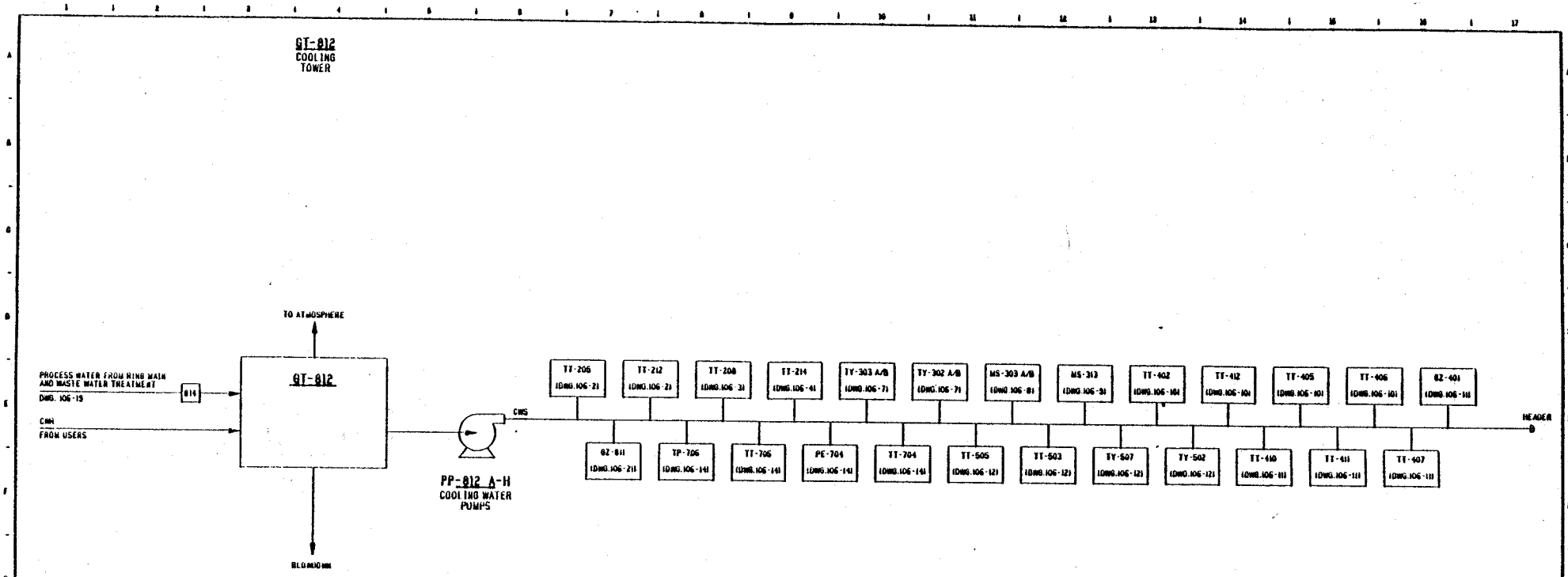

STREAM NO. / COMPONENTS	MW	814					
WATER		928000					
TOTAL - LB/HR		928000					
TOTAL - LB MOL/HR							
GPM AT CONDITIONS		1950					

LEGEND:
- TEMPERATURE °F
- PRESSURE, PSIG
- STREAM NO.

TABLE STREAM FLOWS IN LB/HR.

BASE CASE 25MM GAL/YEAR

2		FOR FINAL REPORT
1		PRELIMINARY FOR ESTIMATE

BADGER ENGINEERS, INC.

PROCESS FLOW DIAGRAM
UTILITIES - UNIT 800
COOLING WATER SYSTEM
SOLAR ENERGY RESEARCH INSTITUTE
GOLDEN, COLORADO

SCALE: NONE
CERTIFIED
DATE

DWG. NO. E0461-106-22 | 2

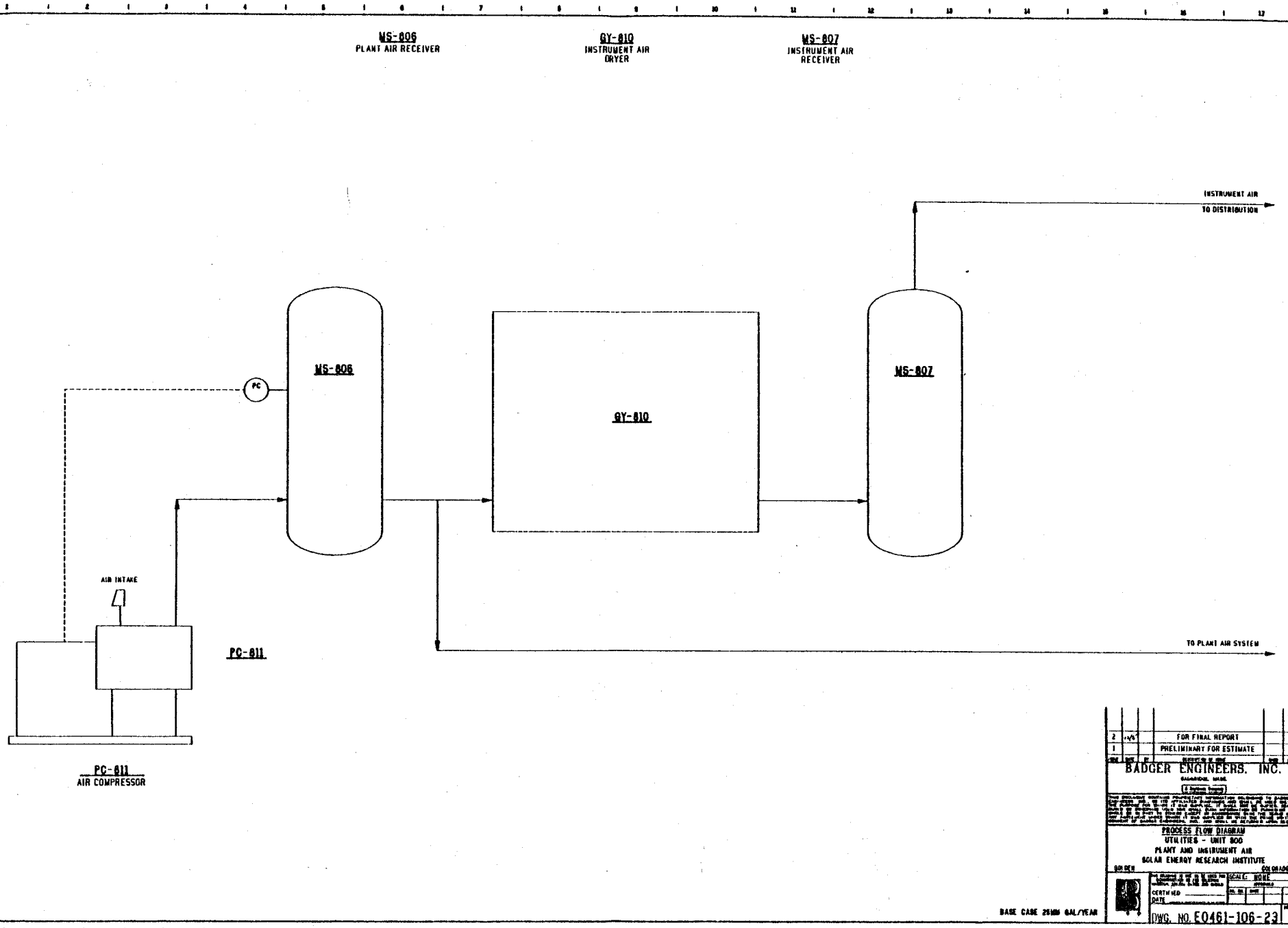

2		FOR FINAL REPORT
1		PRELIMINARY FOR ESTIMATE

BADGER ENGINEERS, INC.
CAMBRIDGE, MASS.

PROCESS FLOW DIAGRAM
UTILITIES - UNIT 800
PLANT AND INSTRUMENT AIR
SOLAR ENERGY RESEARCH INSTITUTE
GOLDEN COLORADO

SCALE: NONE
CERTIFIED
DATE

DWG. NO. E0461-106-23 1

PROCESS FLOW DIAGRAMS

HYDROLYSIS REACTION SECTION
(Alternative Case I)

GA-207 STATIC MIXER | TT-207 ACID WATER HEATER | MB-216 CHIP FEED BIN | GG-202 A/B/C GRINDER | GS-201 A/B/C CHIP SCREW | GS-203 A/B/C WOOD GRINDS CONVEYOR | GY-229 OVERSIZE WOOD GRIND SCREEN | MB-217 GROUND WOOD BIN | GS-231 A/B WOOD GRINDS BELT FEEDER | GA-204 A/B HIGH PRESS FEEDER | MS-201 A/B SLURRY VESSEL | GA-205 A/B WOOD SLURRY AGITATOR | MR-202 A/B/S HYDROLYSIS REACTOR | MS-203 HIGH PRESS. FLASH DRUM | MS-204 LOW PRESS. FLASH DRUM | TT-209 SLURRY COOLER

TT-216 SLURRY VESSEL VENT CONDENSER | TT-202 H.P. FLASH VAPOR AFTERCOOLER | TT-201 PRIMARY FEED WATER PREHEATER | TT-211 SECONDARY FEEDWATER PREHEATER | TT-205 AQUEOUS FURFURAL COOLER | TT-212 LP FLASH VAPOR AFTERCOOLER

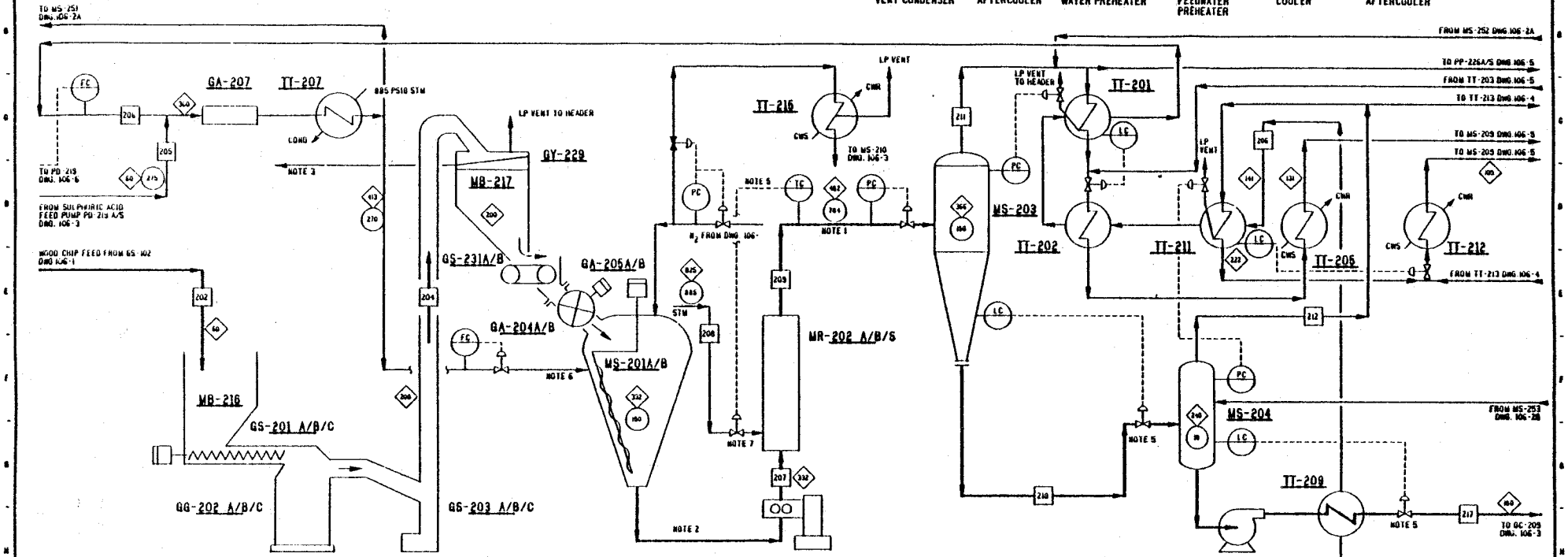

STREAM NO. / COMPONENTS	MW	202	204	206	208	207	238	209	210	211	212	217
WOOD (DRY)	800	134505	134505			134505						
FURFURAL	96							11642	4851	8203	2523	2328
ACETIC ACID	60							772	573	198	123	441
ALPHA-PINENE	136							2767	2205	551	353	1852
WATER	18	134505	134505		455024	532640	39057	635481	517293	119070	100441	442764
FORMIC ACID	46							662	578	84	65	512
LEVULINIC ACID	116							1676	1674	3		1674
HMF	126							2470	2470			2470
OLEIC ACID	282							2767	2756			2756
SULFURIC ACID	98			6262				5380	5380			5380
LIGNIN	5000							33235	33296			33296
ASH	100							463	463			463
HEXOSE SUGARS	180							34297	34237			34287
ANHYDROPYRANOSE	162							4498	4498			4498
TAR (SOLUBLE)	400							2337	2337			2337
HEXAN POLYMER	162							18522	18522			18522
PENTOSE SUGARS	150							14553	12348			12348
TOTAL - LB/HR		269010	269010	6262	455024	672525	39057	771582	643540	128109	103506	565920
TOTAL - LB MOL/HR										6400	4000	
GPM AT CONDITIONS				6	950	1360		1610	1320			1150

PD-201 A/B/S HYDROLYSIS FEED PUMP

PP-204 A/S LIGNIN SLURRY PUMP

NOTES:

1. TEFLON LINED C.S. FOR REACTOR EXIT PIPING.
2. ENTRANCE PIPING TO PD-201 12" DIAM. MINIMUM LENGTH
3. OVERSIZE RETURNED TO CHIP PILE VIA FRONT LOADER.
4. HIGH TEMP STEAM SHUT OFF AT 526° F.
5. 12" DURIRON CONTROL VALVE.
6. MINIMUM LENGTH
7. TANGENTIAL STEAM INLET

LEGEND:

- TEMPERATURE °F
- PRESSURE, PSIG
- STREAM NO.

TABLE STREAM FLOWS IN LB/HR.

BASE CASE 25MM GAL/YEAR

NO.	BY	DESCRIPTION	DATE	APP'D
2	M/F	FOR FINAL REPORT		
1		PRELIMINARY FOR ESTIMATE		

BADGER ENGINEERS, INC.
CAMBRIDGE, MASS.

PROCESS FLOW DIAGRAM
ACID HYDROLYSIS UNIT 200 (SHEET 1 OF 3)
HYDROLYSIS REACTION
SOLAR ENERGY RESEARCH INSTITUTE
GOLDEN ALTERNATE CASE COLORADO

SCALE: NONE
CERTIFIED
DATE

DWG. NO. E0461-106-2A 2

GC-209A/B	GA-212	MS-210	MS-211	GC-210A/B	GA-233	MS-225	MS-226	GC-232A/B	GA-234	MS-227	GC-214A/B	GA-213	GS-211A/B/C	MR-206	MS-212	GA-222
1 ST STAGE LIGNIN CENTRIFUGE	2 ND STAGE LIGNIN FEED TANK AGITATOR	1 ST STAGE WASH TANK	2 ND STAGE LIGNIN FEED TANK	2 ND STAGE LIGNIN CENTRIFUGE	3 RD STAGE LIGNIN FEED TANK AGITATOR	2 ND STAGE WASH TANK	3 RD STAGE LIGNIN FEED TANK	3 RD STAGE LIGNIN CENTRIFUGE	DEWATERING CENTRIFUGE FEED TANK AGITATOR	DEWATERING CENTRIFUGE FEED TANK	LIGNIN DEWATERING CENTRIFUGE	NEUTRALIZATION TANK AGITATOR	LIGNIN SLUDGE SCREWS	NEUTRALIZATION REACTION TANK	LIGNIN SLUDGE TANK	LIGNIN SLUDGE TANK AGITATOR

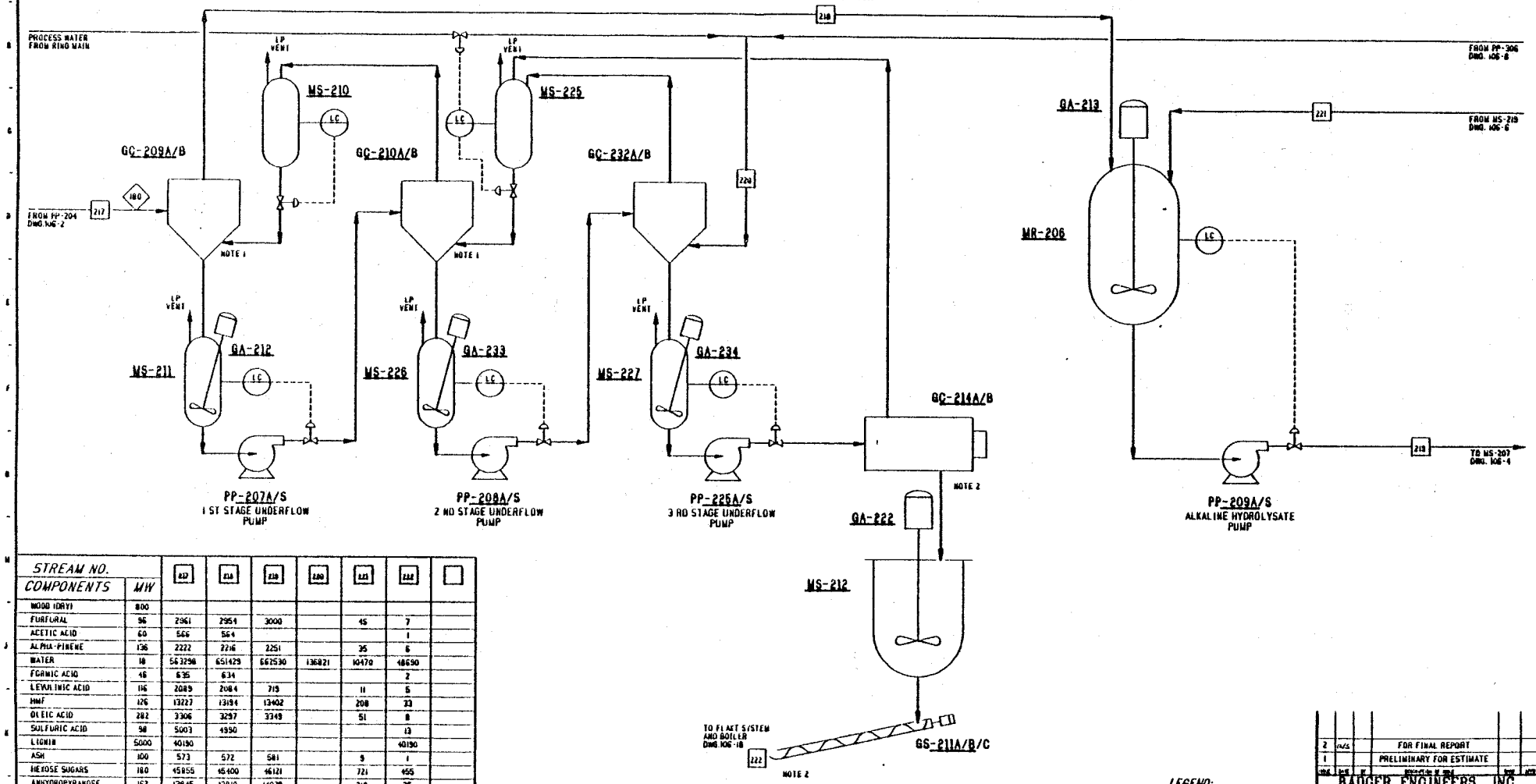

STREAM NO. / COMPONENTS	MW	217	218	219	220	221	222	
WOOD (DRY)	800							
FURFURAL	96	2961	2954	3000		45	7	
ACETIC ACID	60	565	564				1	
ALPHA-PINENE	136	2222	2216	2251		35	6	
WATER	18	563298	651429	662530	136821	10470	18690	
FORMIC ACID	46	635	634				2	
LEVULINIC ACID	116	2089	2084	715		11	5	
HMF	126	13227	13194	13402		208	33	
OLEIC ACID	282	3306	3297	3349		51	8	
SULFURIC ACID	98	5003	4990				13	
LIGNIN	5000	40190					40190	
ASH	100	573	572	581		9	1	
HEXOSE SUGARS	180	45855	45400	46121		721	455	
ANHYDROPYRANOSE	162	13845	13810	14028		218	35	
TAR (SOLUBLE)	400	2266	2266					
TAR (INSOLUBLE)	400	9066		2266			9066	
CALCIUM HYDROXIDE	74					6067		
CALCIUM FORMATE	130			910		14		
CALCIUM ACETATE	158			758		12		
GYPSUM	172			8760				
CALCIUM LEVULINATE	270			1626		25		
TOTAL - LB/HR.		705102	743411	760298	136821	15887	98512	
TOTAL - LB MOL/HR								
GPM AT CONDITIONS		1450	1530	1565	275	35	180	

LEGEND:
- TEMPERATURE °F
- PRESSURE, PSIG
- STREAM NO.

TABLE STREAM FLOWS IN LB/HR.

BASE CASE 25MM GAL/YEAR

NOTES:
1. DISPLACEMENT WASH LIQUOR TO CENTRIFUGE BY GRAVITY FEED.
2. 50 % LIGNIN/TAR SLUDGE

NO.	BY	DESCRIPTION	DATE
2	MAS	FOR FINAL REPORT	
1		PRELIMINARY FOR ESTIMATE	

BADGER ENGINEERS, INC.
CAMBRIDGE, MASS.

PROCESS FLOW DIAGRAM
ACID HYDROLYSIS UNIT 200 (SHEET 2 OF 3)
LIGNIN SEPARATION AND WASHING
SOLAR ENERGY RESEARCH INSTITUTE
GOLDEN ALTERNATE CASE GOLDEN

SCALE: NONE
CERTIFIED
DATE

DWG. NO. E0461-106-3 2

MS-251	MR-250	GA-250	IT-251	MS-252	MS-253	GC-253	MS-255	GC-251 A/B	GC-252	GA-256	GS-264 A/B/C	MS-257	MS-256	GA-255	GA-258	MS-258
2ND STAGE SLURRY VESSEL	2ND STAGE HYDROLYSIS REACTOR	2ND STAGE SLURRY VESSEL AGITATOR	2ND STAGE SLURRY COOLER	2ND STAGE H.P. FLASH DRUM	2ND STAGE L.P. FLASH DRUM	2ND STAGE LIGNIN DEWATERING CENTRIFUGE	2ND STAGE LIGNIN WASH TANK	2ND STAGE PRIMARY LIGNIN CENTRIFUGE	2ND STAGE LIGNIN WASHING CENTRIFUGE	LIGNIN SLUDGE TANK AGITATOR	LIGNIN SLUDGE SCREW	LIGNIN SLUDGE TANK	2ND STAGE LIGNIN CENTRIFUGE FEED TANK	2ND STAGE CENTRIFUGE FEED TANK AGITATOR	DEWATERING CENTRIFUGE FEED AGITATOR	DEWATERING CENTRIFUGE FEED TANK

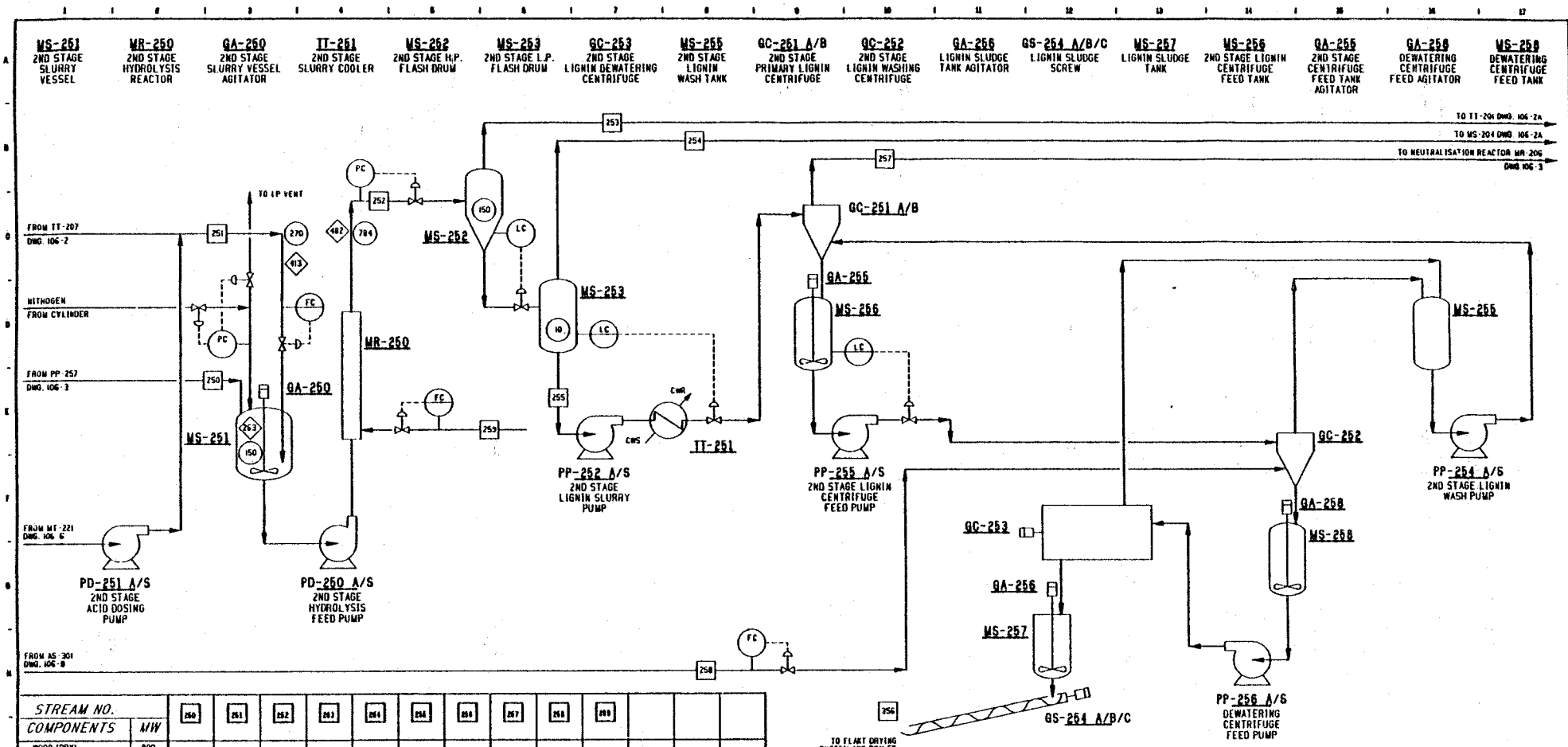

STREAM NO. / COMPONENTS	MW	250	251	252	253	254	256	258	257	258	259
WOOD (DRY)	800										
FURFURAL	96	20									
ACETIC ACID	60	1									
ALPHA-PINENE	136	18									
WATER	18	95076	56889	705963	38819	26316	140834	34957	180877	7500	53100
FORMIC ACID	46	4		221	29	22	170	2	168		
LEVULINIC ACID	116	18		551			551	6	545		
HMF	126	22		2989			2989	30	2969		
OLEIC ACID	282	30									
SULFURIC ACID	98	45	892	892			892	9	873		
LIGNIN	5000	33296		33296			33296	33296			
ASH	100	9									
HEXOSE SUGARS	180	331		11319			11319	113	11206		
ANHYDROPYRANOSE	162	44		3131			3131	31	3100		
TAR (SOLUBLE)	400	120									
TAR (INSOLUBLE)	400	1764		1852			1852	1852			
CELLULOSE		18552									
XYLOSE											
TOTAL - LB/HR.		149348	57771	260220	38396	25886	195034	70296	189738	7500	53100
TOTAL - LB MOL/HR					2133	1438					3000
GPM AT CONDITIONS		380	135	650			412	130	420	150	

LEGEND:
- TEMPERATURE °F
- PRESSURE, PSIG
- STREAM NO.

TABLE STREAM FLOWS IN LB/HR.

BASE CASE 25MM GAL/YEAR

2	12/5	FOR FINAL REPORT
1		PRELIMINARY FOR ESTIMATE

BADGER ENGINEERS, INC.
CAMBRIDGE, MASS.

PROCESS FLOW DIAGRAM
UNIT 200
2ND STAGE ACID HYDROLYSIS
SOLAR ENERGY RESEARCH INSTITUTE
ALTERNATE CASE
GOLDEN COLORADO

SCALE: NONE
CERTIFIED
DATE

DWG. NO. E0461-106-2B 2

GC-209A/B
1 ST STAGE LIGNIN CENTRIFUGE

GA-212
2 ND STAGE LIGNIN FEED TANK AGITATOR

MS-210
1 ST STAGE WASH TANK

MS-211
2 ND STAGE LIGNIN FEED TANK

GC-210A/B
2 ND STAGE LIGNIN CENTRIFUGE

GA-233
3 RD STAGE LIGNIN FEED TANK AGITATOR

MS-225
2 ND STAGE WASH TANK

MS-226
3 RD STAGE LIGNIN FEED TANK

GC-232A/B
3 RD STAGE LIGNIN CENTRIFUGE

GA-234
DEWATERING CENTRIFUGE FEED TANK AGITATOR

MS-227
DEWATERING CENTRIFUGE FEED TANK

GC-214A/B
LIGNIN DEWATERING CENTRIFUGE

GA-213
NEUTRALIZATION TANK AGITATOR

MR-206
NEUTRALIZATION REACTION TANK

MS-259
SLUDGE DILUTION VESSEL

GA-257
DILUTION VESSEL AGITATOR

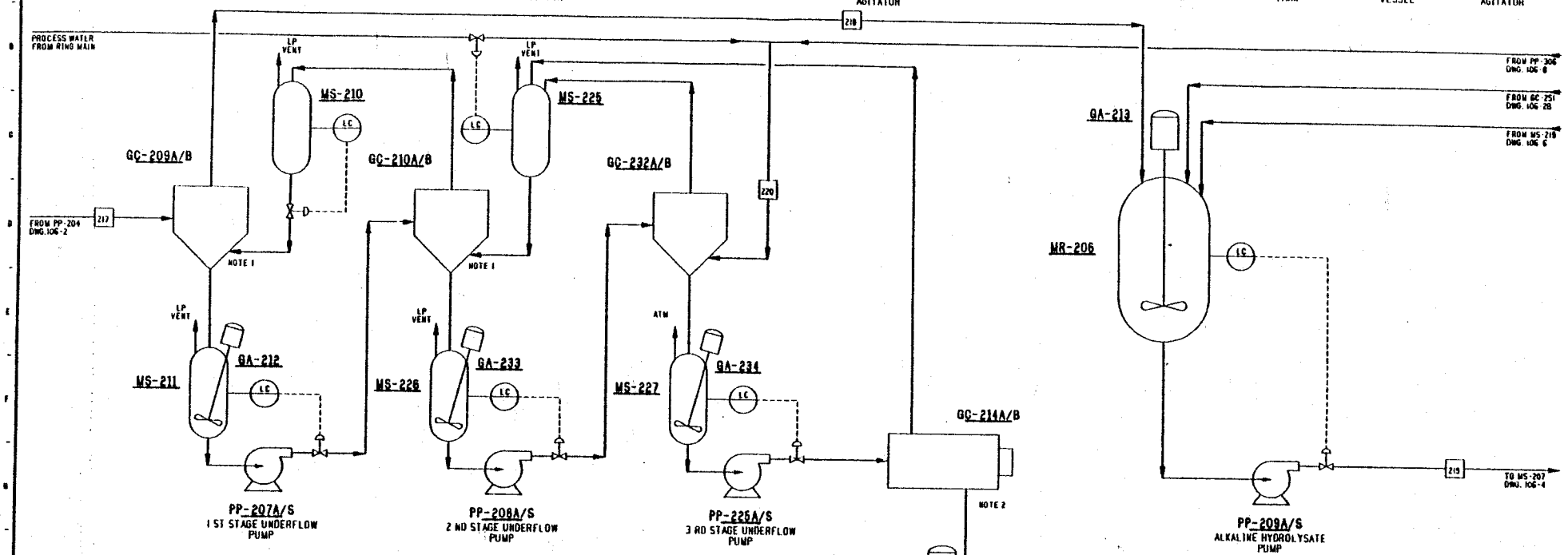

STREAM NO. / COMPONENTS	MW	217	218	219	220		222	224
WOOD (DRY)	800							
FURFURAL	96	2328	2306	2306				22
ACETIC ACID	60	441	441					4
ALPHA-PINENE	136	1852	1830	1830				18
WATER	18	442764	511560	707589	121716		42156	52920
FORMIC ACID	46	512	507					4
LEVULINIC ACID	116	1674	1654					18
HMF	126	2470	2448	5417				22
OLEIC ACID	282	2756	2734	2734				28
SULFURIC ACID	98	5380	5336					44
LIGNIN	5000	33296						33296
ASH	100	463	463	463				4
HEXOSE SUGARS	180	34297	33957	45163				331
ANHYDROPYRANOSE	162	4498	4454	7564				44
TAR (SOLUBLE)	400	2337	573					
TAR (INSOLUBLE)	400			573				1764
HEXAN POLYMERR		18522						18522
PENTOSE SUGARS		12348	12128	12128				123
CALCIUM HYDROXIDE	74							
CALCIUM LEVULINATE	270			2558				
CALCIUM FORMATE	130			953				
CALCIUM SULPHATE	172			10897				
CALCIUM ACETATE	158			581				
TOTAL - LB/HR.		565920	580391	800746	121716		42156	107164
TOTAL - LB MOL/HR								
GPM AT CONDITIONS		1200	1200	1620	250		85	25

NOTES:

1. DISPLACEMENT WASH LIQUOR TO CENTRIFUGE BY GRAVITY FEED.
2. 50 % LIGNIN/TAR/CELLULOSE SLUDGE

LEGEND:

- TEMPERATURE °F
- PRESSURE, PSIG
- STREAM NO.

TABLE STREAM FLOWS IN LB/HR.

BASE CASE 25MM GAL/YEAR

2	12/A	FOR FINAL REPORT
1		PRELIMINARY FOR ESTIMATE

BADGER ENGINEERS, INC.
CAMBRIDGE, MASS.

PROCESS FLOW DIAGRAM
ACID HYDROLYSIS UNIT 200 (SHEET 2 OF 8)
LIGNIN SEPARATION AND WASHING
SOLAR ENERGY RESEARCH INSTITUTE
GOLDEN ALTERNATE CASE COLORADO

SCALE: NONE
CERTIFIED
DATE

DWG. NO. E0461-106-3A 2

PLOT PLANS

(Design Case I)

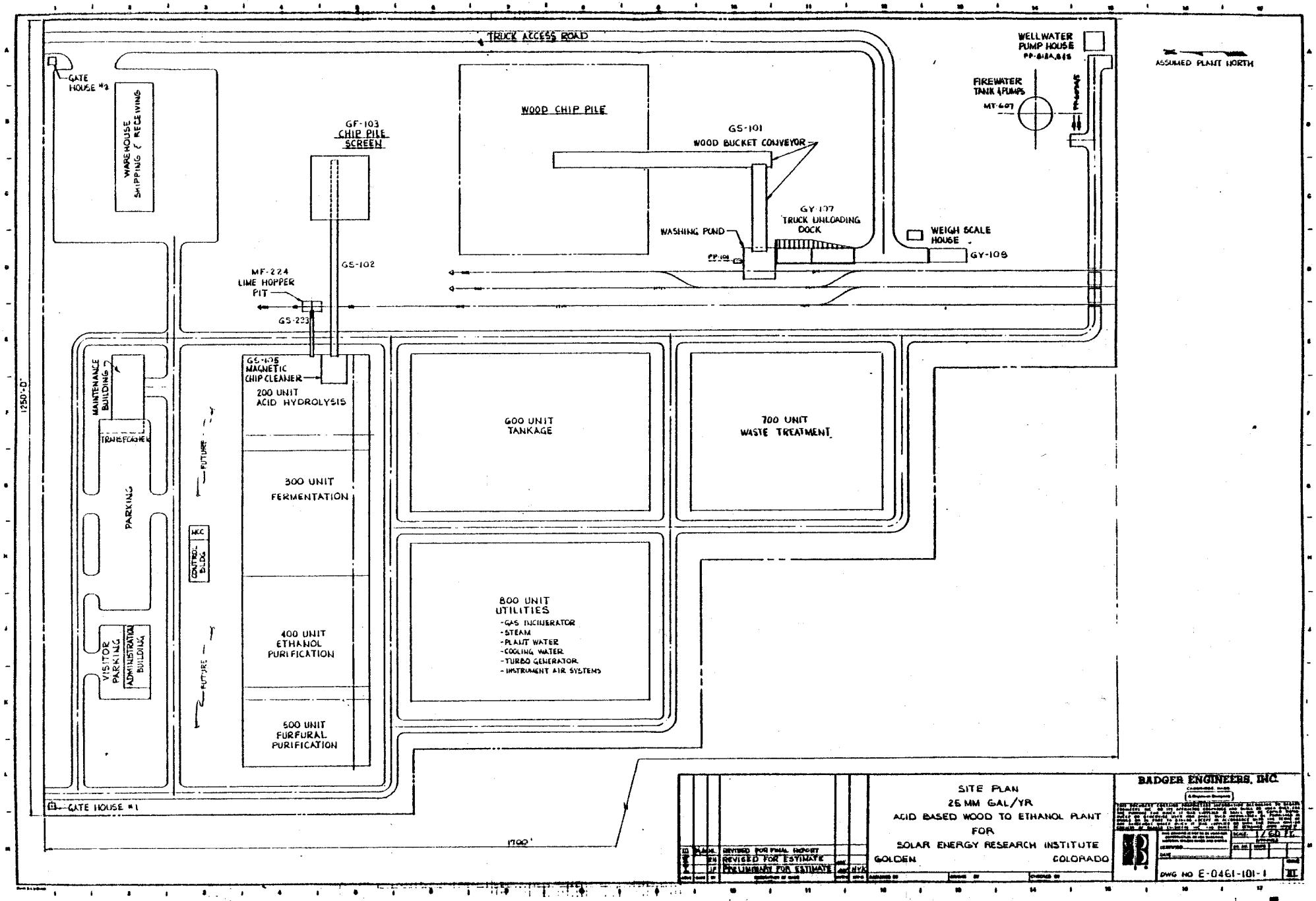
TRUCK ACCESS ROAD
GATE HOUSE #2
WAREHOUSE SHIPPING & RECEIVING
GF-103 CHIP PILE SCREEN
WOOD CHIP PILE
GS-101 WOOD BUCKET CONVEYOR
GY-107 TRUCK UNLOADING DOCK
WASHING POND
PP-101
WEIGH SCALE HOUSE
GY-108
WELLWATER PUMP HOUSE
FIREWATER TANK & PUMPS
MT-607
ASSUMED PLANT NORTH
GS-102
MF-224 LIME HOPPER PIT
GS-223
GS-105 MAGNETIC CHIP CLEANER
200 UNIT ACID HYDROLYSIS
300 UNIT FERMENTATION
400 UNIT ETHANOL PURIFICATION
500 UNIT FURFURAL PURIFICATION
600 UNIT TANKAGE
700 UNIT WASTE TREATMENT
800 UNIT UTILITIES
-GAS INCINERATOR
-STEAM
-PLANT WATER
-COOLING WATER
-TURBO GENERATOR
-INSTRUMENT AIR SYSTEMS
MAINTENANCE BUILDING
TRANSFORMER
PARKING
VISITOR PARKING
ADMINISTRATION BUILDING
FUTURE
FUTURE
MCC
CONTROL BLDG
GATE HOUSE #1
1250'-0"
1700'
REVISED FOR FINAL REPORT
REVISED FOR ESTIMATE
PRELIMINARY FOR ESTIMATE
SITE PLAN
25 MM GAL/YR
ACID BASED WOOD TO ETHANOL PLANT
FOR
SOLAR ENERGY RESEARCH INSTITUTE
GOLDEN COLORADO
BADGER ENGINEERS, INC.
SCALE 1/60 FT.
DWG NO E-0461-101-1

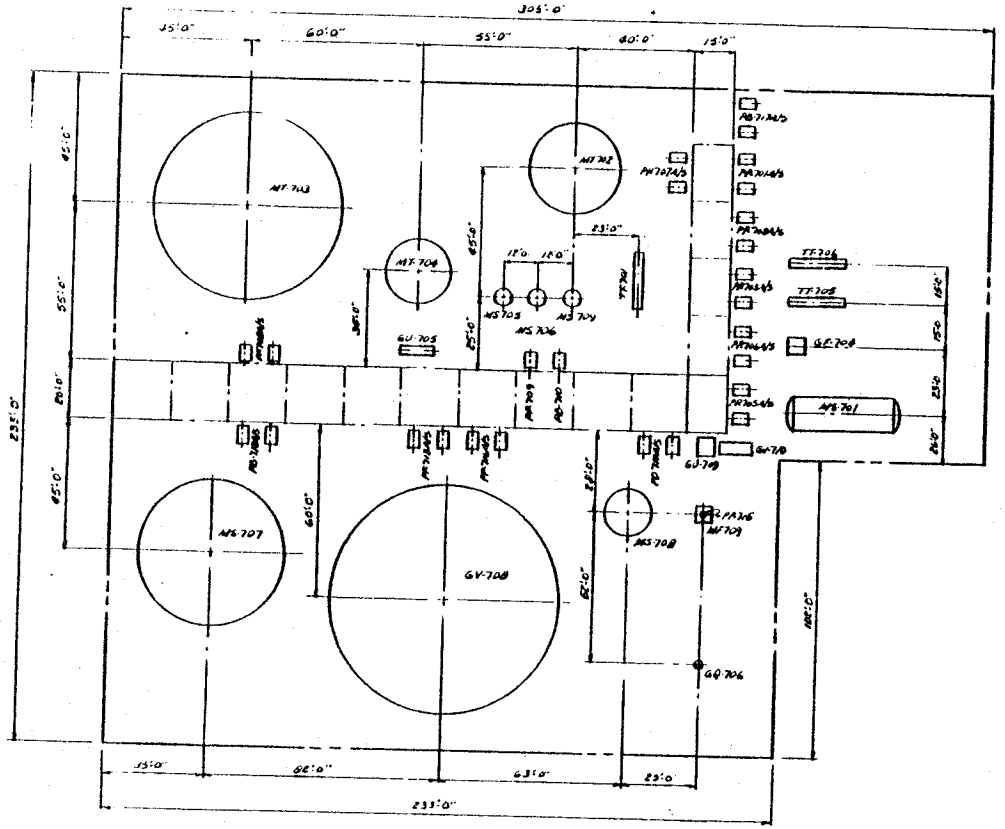

PLAN @ GRADE
700 UNIT - WASTE TREATMENT
SCALE: 1" = 20'-0"

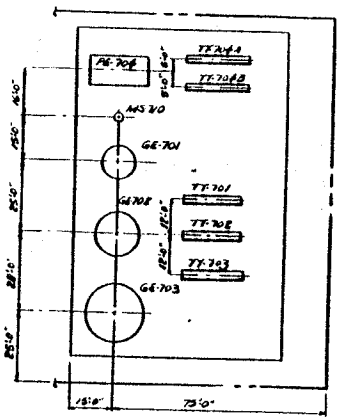

PLAN @ 1ST LEVEL EL 40'-0" ±
700 UNIT - WASTE TREATMENT
SCALE: 1" = 20'-0"

II			REVISED FOR FINAL REPORT
I		RH	PRELIMINARY FOR ESTIMATE

EQUIPMENT LOCATION PLAN
25 MM GAL/YR.
ACID BASED WOOD TO ETHANOL PLANT
FOR
SOLAR ENERGY RESEARCH INSTITUTE
GOLDEN COLORADO

BADGER ENGINEERS, INC.

DRAWN BY R. HISTEN

SCALE 1" = 20'-0"

DWG NO E04G1-102-1

ISSUE II

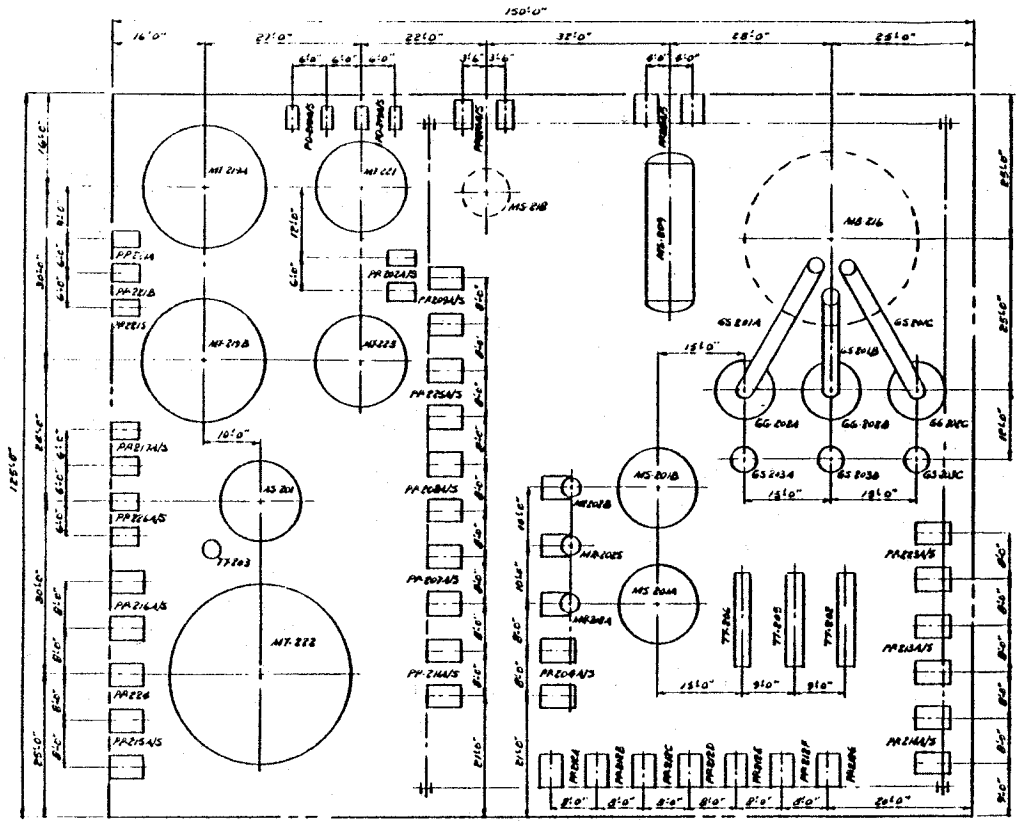

PLAN @ GRADE
200 UNIT- ACID HYDROLYSIS
SCALE: 1" = 10'-0"

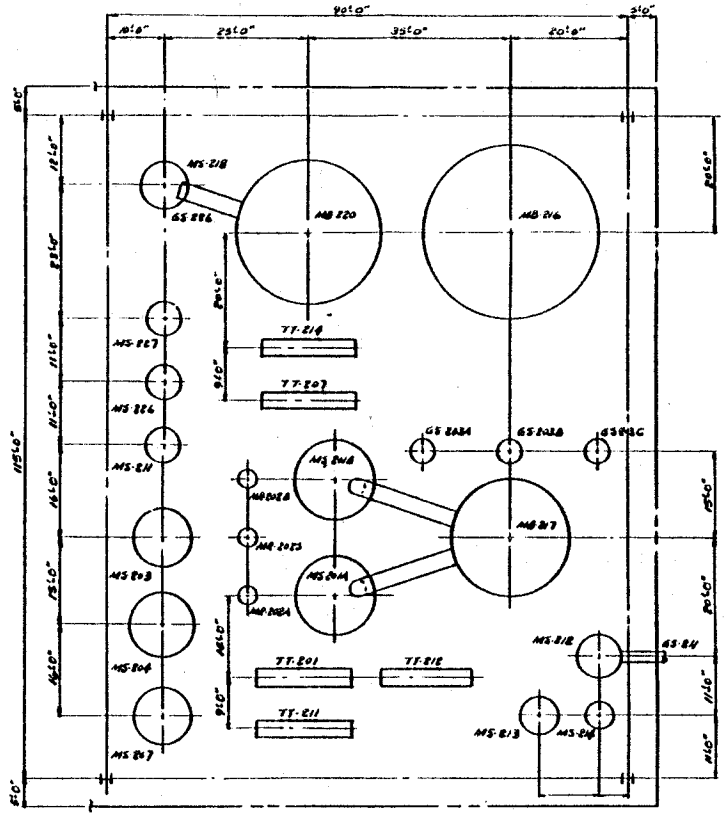

PLAN @ 1ST LEVEL EL +30'±
200 UNIT - ACID HYDROLYSIS
SCALE: 1" = 10'-0"

NOTE:
FOR PLAN @ 2ND LEVEL SEE DWG E0461-102-3

II			REVISED FOR FINAL REPORT			

EQUIPMENT LOCATION PLAN
25 MM GAL/YR
ACID BASED WOOD TO ETHANOL PLANT
FOR
SOLAR ENERGY RESEARCH INSTITUTE
GOLDEN COLORADO

DRAWN BY M. LECCESE

BADGER ENGINEERS, INC.

SCALE 1" = 10'-0"

DWG NO E0461-102-2 II

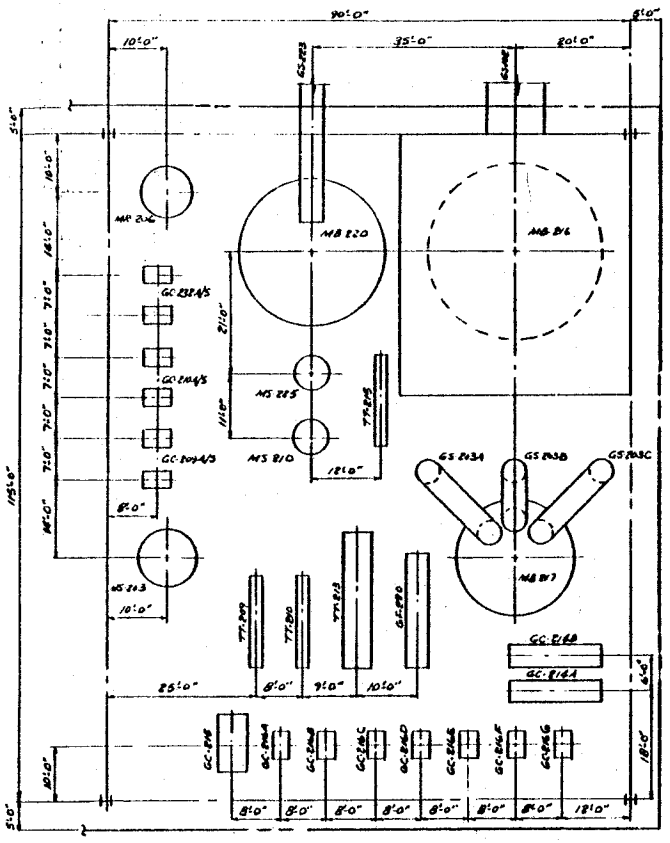

PLAN @ 2ND LEVEL + 60'

200 UNIT - ACID HYDROLYSIS

SCALE: 1"=10'-0"

NOTE:
FOR PLAN @ GRADE AND PLAN @ 1ST LEVEL
SEE DWG. E0461-102-2

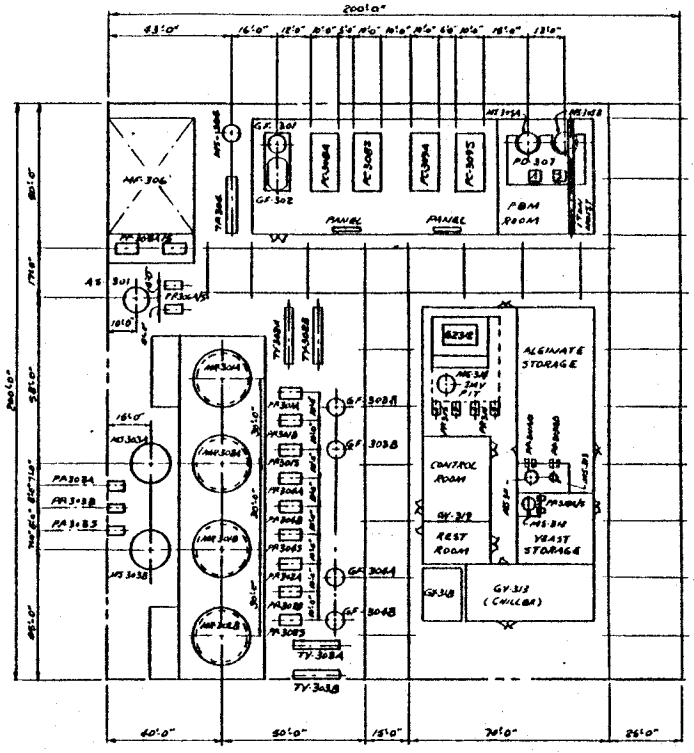

PLAN @ GRADE

300 UNIT - FERMENTATION

SCALE: 1"=20'-0"

EQUIPMENT LOCATION PLAN
25 MM GAL/YR.
ACID BASED WOOD TO ETHANOL PLANT
FOR
SOLAR ENERGY RESEARCH INSTITUTE
GOLDEN COLORADO

BADGER ENGINEERS, INC.

DWG NO E0461-102-3

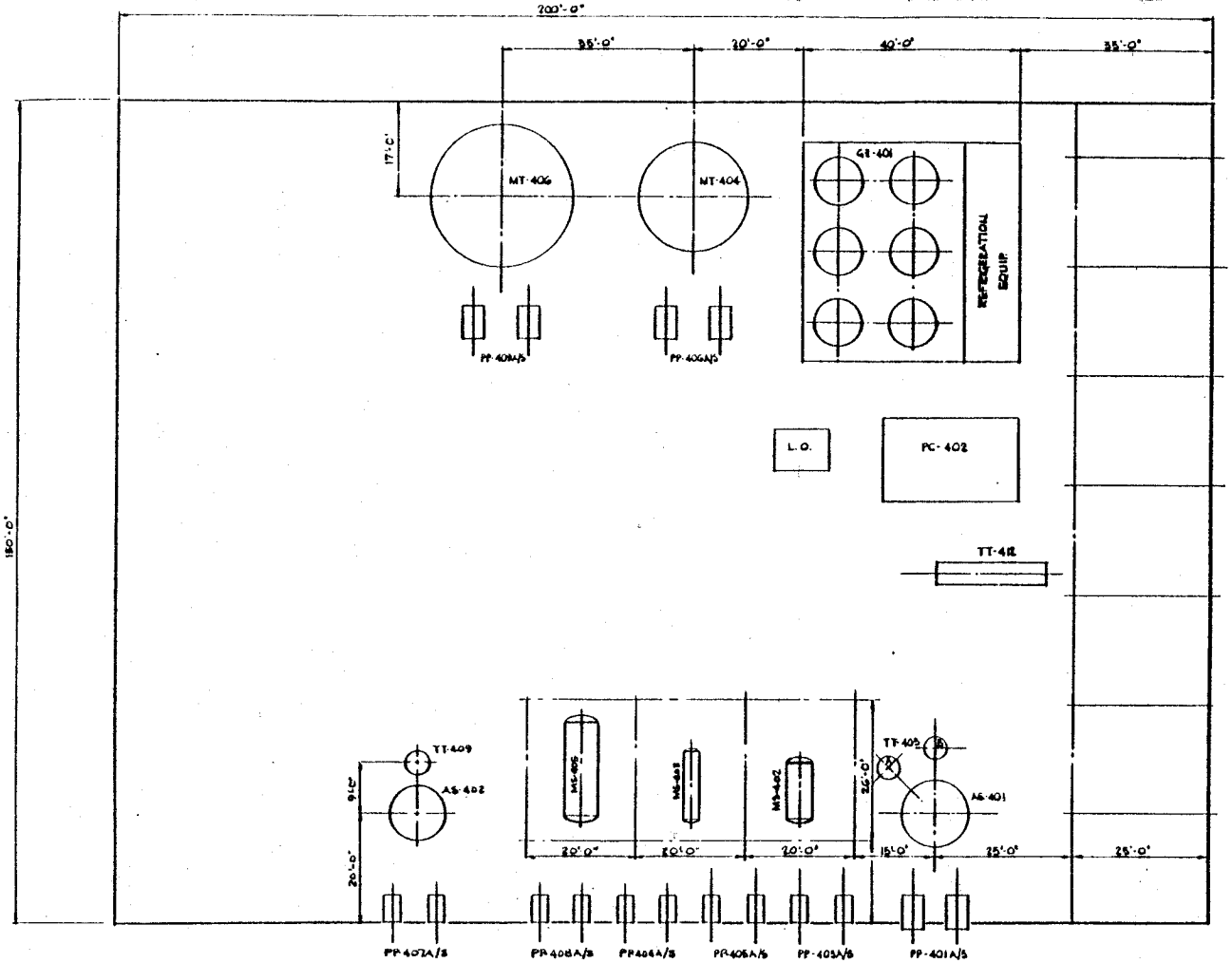

PLAN @ GRADE - 400 UNIT
ETHANOL PURIFICATION
SCALE: 1" = 10'-0"

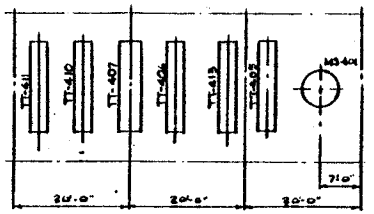

PLAN @ 1ST LEVEL -
ETHANOL EXCHANGER STRUCTURE
SCALE: 1" = 10'-0"

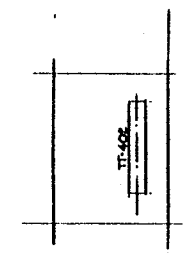

PLAN @ 2ND LEVEL

II					
I		RH	REVISED FOR FINAL REPORT		
			PRELIMINARY FOR ESTIMATE		

EQUIPMENT LOCATION PLAN
25 MM GAL/YR.
ACID BASED WOOD TO ETHANOL PLANT
FOR
SOLAR ENERGY RESEARCH INSTITUTE
GOLDEN COLORADO

DRAWN BY R. HISTEN

BADGER ENGINEERS, INC.

SCALE 1" = 10'-0"

DWG NO E0461-102-4 II

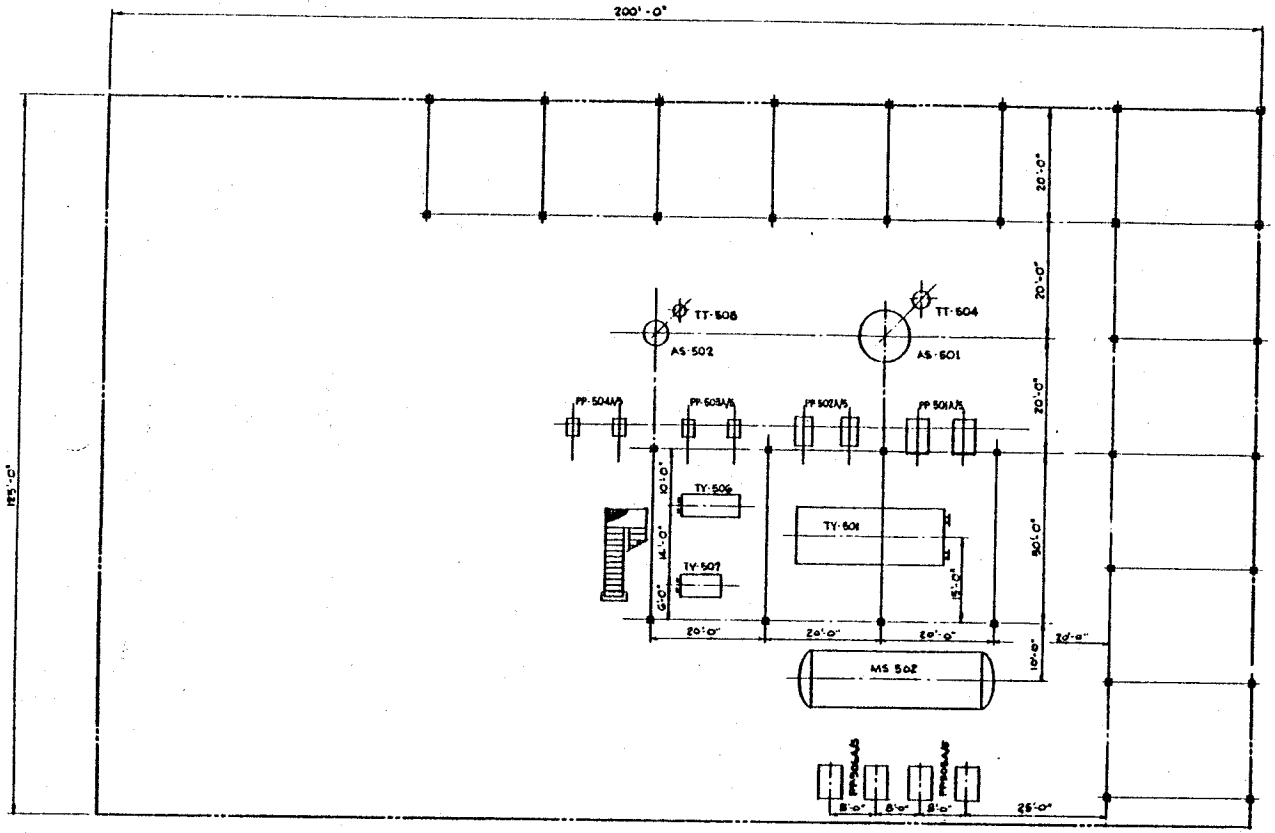

500 UNIT - PLAN @ GRADE
FURFURAL PURIFICATION
SCALE: 1"=10'-0"

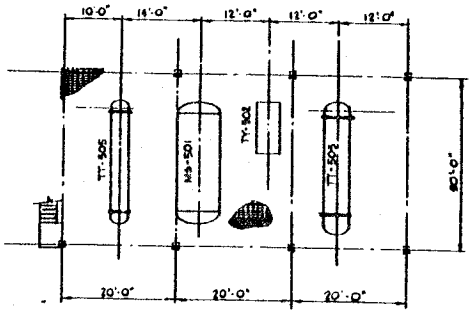

PLAN @ EL. 24'-0"
FURFURAL EXCHANGER STRUCTURE
SCALE: 1"=10'-0"

II		REVISED FOR FINAL REPORT	
I		PRELIMINARY FOR ESTIMATE	

EQUIPMENT LOCATION PLAN
25 MM GAL/YR.
ACID BASED WOOD TO ETHANOL PLANT
FOR
SOLAR ENERGY RESEARCH INSTITUTE
GOLDEN COLORADO

DRAWN BY R HISTEN

BADGER ENGINEERS, INC.

SCALE 1"=10'-0"

DWG. NO. E0461-102-5 II

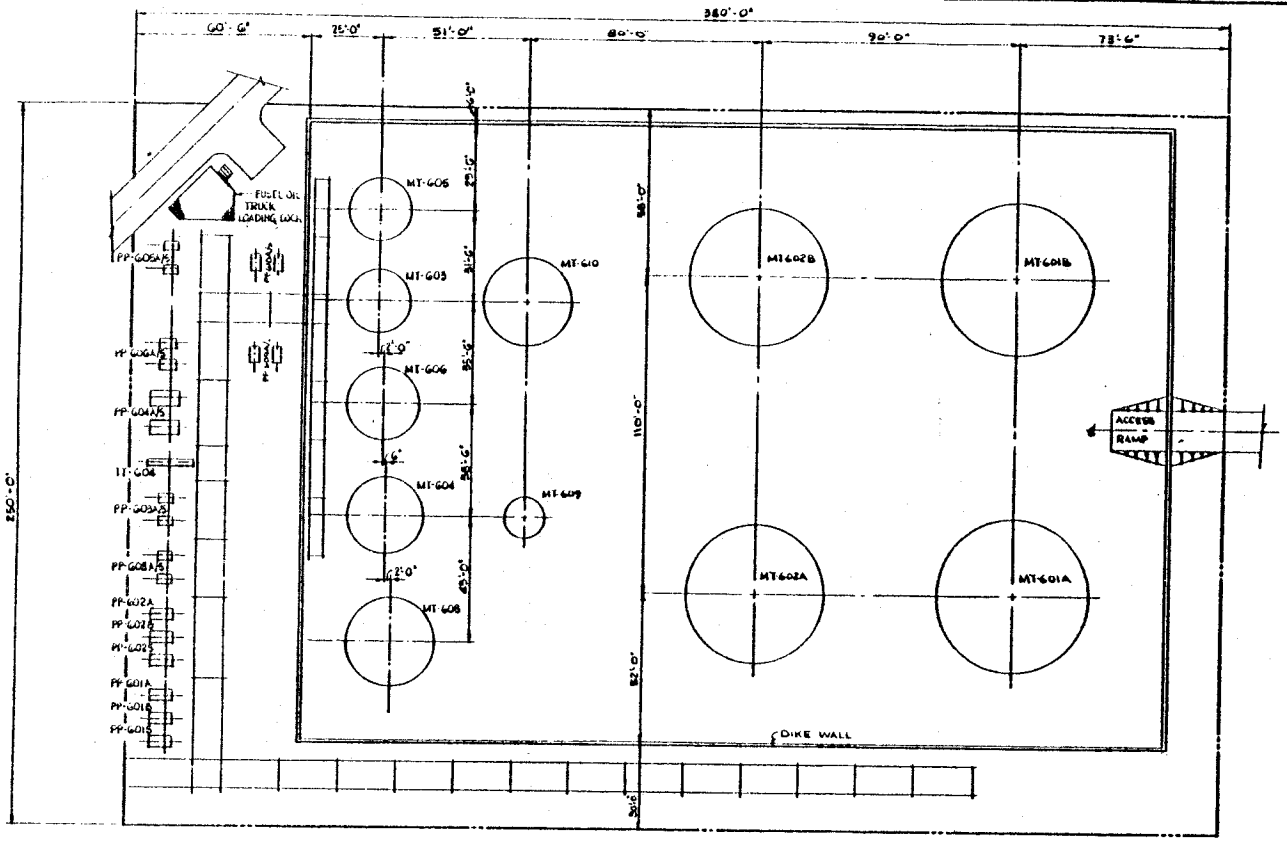

PLAN @ GRADE
600 UNIT - TANKAGE
SCALE: 1"=20'-0"

II			REVISED FOR FINAL REPORT
I			PRELIMINARY FOR ESTIMATE

EQUIPMENT LOCATION PLAN
25 MM GAL./YR.
ACID BASED WOOD TO ETHANOL PLANT
FOR
SOLAR ENERGY RESEARCH INSTITUTE
GOLDEN COLORADO

DESIGNED BY R. HISTEN

BADGER ENGINEERS, INC.
CAMBRIDGE, MASS.

SCALE: 1"=20'-0"

DWG NO E0461-102-6 II