Biomass to Ethanol Process Evaluation

A report prepared for
National Renewable Energy Laboratory
December 1994

CHEM SYSTEMS

Chem Systems Inc.
303 South Broadway
Tarrytown, New York 10591
Telephone: (914) 631-2828 Telex: 221844 Facsimile (914) 631-8851

APPENDIX V
EQUIPMENT LIST

DATE 08-Dec-94

23.94
6.54
30.48

VESSELS

CSI ITEM #	EQUIPMENT NAME	CSI ACTUAL FRACTION FULL	CSI P psi	CSI H or V	CSI MATERIAL	CSI sensitivity CAPACITY (m^3)	CSI quant.	CSI 1993 $/UNIT	CSI 1993 TOTAL$	CSI INSTALLED FACTOR	CSI INSTALLED TOTAL $	CSI SOURCE
T-201	Sulfuric Acid Storage	0.9	atm	V	SS,316	42	1	45,371	45,371	1.2	54,445	PDQ$
T-203	Blowdown Tank	0.5	15	V	SS,316	31	1	36,337	36,337	1.2	43,605	PDQ$
T-206	Neutralization Reaction Tank	0.8	15	V	SS,316	91	1	63,956	63,956	1.2	76,747	PDQ$
T-220*	Lime Slurry Tank	1	atm	V	SS,316	29	1	35,387	35,387	1.2	42,465	PDQ$
FM-303	Xylose Fermenter	0.95	15	V	CS	2839	8	183,142	1,465,137	1.4	2,051,192	PDQ$
FM-305/10	Xylose Seed Fermenter	0.95	15	V	CS	1170	1	105,132	105,132	1.4	147,185	PDQ$
FM-305/10	Xylose Seed Fermenter	0.95	15	V	CS	117	1	36,361	36,361	1.4	50,906	PDQ$
FM-305/10	Xylose Seed Fermenter	0.95	15	V	CS	12	1	13,824	13,824	2.3	31,796	PDQ$
FM-305/10	Xylose Seed Fermenter	0.95	15	V	CS	1	1	4,525	4,525	2.3	10,408	PDQ$
FM-305/10	Xylose Seed Fermenter	0.95	15	V	CS	0.12	1	1,481	1,481	2.3	3,407	PDQ$
FM-305/10	Xylose Seed Fermenter	0.95	15	V	CS	0.01	1	485	485	2.3	1,115	PDQ$
T-301	Seed Hold Tank	0.5	15	V	CS	1,170	1	105,132	105,132	1.4	147,185	PDQ$
T-321	Base Tank	0.9	300	H	CS	9.18	1	14,203	14,203	2.8	39,768	PDQ$
FM-400	Cellulase Fermenter	0.8	15	V	CS, lined	805	2	126,780	253,560	1.6	405,696	Vendor
FM-401/4	Cellulase Seed Fermenter	0.8	15	V	CS, lined	43	2	35,355	70,710	1.4	98,994	Vendor/PDQ$
FM-401/4	Cellulase Seed Fermenter	0.8	15	V	SS, 316	2	2	8,949	17,897	1.5	26,846	Vendor/PDQ$
FM-401/4	Cellulase Seed Fermenter	0.8	15	V	SS, 316	0.11	2	1,851	3,702	1.5	5,553	Vendor/PDQ$
FM-401/4	Cellulase Seed Fermenter	0.8	15	V	SS, 316	0.01	2	383	766	1.5	1,149	Vendor/PDQ$
T-400	Media Prep Tank	1	15	V	CS	4	1	8,490	8,490	2.3	19,526	PDQ$
T-403A/B	Antifoam Tank	1	15	V	CS	1	2	3,853	7,707	2.3	17,725	PDQ$
T-405	Sterile Feed Tank	0.9	10	V	CS	746	1	79,361	79,361	1.4	111,105	PDQ$
T-410A/B	Cellulase Hold Tank	0.9	atm	V	CS, lined	746	1	117,757	117,757	1.6	188,410	Vendor
FM-500	SSF Fermenter	0.95	atm	V	CS, lined	2,839	30	305,962	9,178,867	1.6	14,686,187	Vendor
FM-501/6	SSF Seed Fermenter (S.c.)	0.95	10	V	CS, lined	2173	1	253,789	253,789	1.6	406,063	Vendor
FM-501/6	SSF Seed Fermenter (S.c.)	0.95	10	V	CS, lined	217	1	70,124	70,124	1.6	112,199	Vendor/PDQ$
FM-501/6	SSF Seed Fermenter (S.c.)	0.95	10	V	CS, lined	22	1	26,660	26,660	2.3	61,319	Vendor/PDQ$
FM-501/6	SSF Seed Fermenter (S.c.)	0.95	10	V	SS, 316	2	1	8,999	8,999	1.5	13,498	Vendor/PDQ$
FM-501/6	SSF Seed Fermenter (S.c.)	0.95	10	V	SS, 316	0.22	1	2,680	2,680	1.5	4,020	Vendor/PDQ$
FM-501/6	SSF Seed Fermenter (S.c.)	0.95	10	V	SS, 316	0.02	1	798	798	1.5	1,197	Vendor/PDQ$
T-501A	Seed Hold Tank (S.c.)	0.95	10	V	CS,lined	2173	1	253,789	253,789	1.6	406,063	Vendor
T-601	Degasser Drum	0.2	15	V	CS	198	1	43,374	43,374	1.4	60,723	PDQ$
T-602	Beer Column Reflux Drum	–	50	H	CS	4	1	9,183	9,183	2.8	25,713	PDQ$
T-603	Fusel Oil Decanter	0.5	25	H	CS	1.20	1	5,208	5,208	2.8	14,584	PDQ$
T-605	Rectification Column Reflux Drum	–	25	H	CS	4	1	9,183	9,183	2.8	25,713	PDQ$
T-607*	Extraction Still Reflux Drum	–	25	H	CS	4	1	9,183	9,183	2.8	25,713	PDQ$
T-630	Recycled Water Tank	1	15	V	CS	35	1	23,590	23,590	2.3	54,258	PDQ$
							ISBL		12,382,712	1.57	19,472,481	

DATE 08-Dec-94

VESSELS

CSI ITEM #	EQUIPMENT NAME	CSI ACTUAL FRACTION FULL	CSI P psi	CSI H or V	CSI MATERIAL	CSI sensitivity CAPACITY (m^3)	CSI quant.	CSI 1993 $/UNIT	CSI 1993 TOTAL$	CSI INSTALLED FACTOR	CSI INSTALLED TOTAL $	CSI SOURCE
T-701A/B	Ethanol Product Tank	0.8	atm	V	CS	3891	3	223,081	669,242	1.4	936,938	PDQ$
T-703	Sulfuric Acid Storage Tank	0.8	atm	V	SS, 316	378	1	119,564	119,564	1.2	143,477	PDQ$
T-704	Fire Water Tank	0.8	atm	V	CS	1923	1	143,506	143,506	1.4	200,909	PDQ$
T-706A/B	NH3 Storage Tank	0.8	300	H	CS	32	2	42,580	85,160	2.8	238,449	PDQ$
T-707	Antifoam Storage Tank	0.8	atm	V	CS	35	1	23,611	23,611	2.3	54,305	PDQ$
T-708	Diesel Fuel Tank	0.8	atm	V	CS	79	1	31,935	31,935	1.4	44,709	PDQ$
T-710	Gasoline Storage Tank	0.8	atm	V	CS	540	1	64,771	64,771	1.4	90,679	PDQ$
T-720	Corn Steep Liquor Tank	0.8	atm	V	CS	128	1	37,519	37,519	1.4	52,527	PDQ$
T-730*	Lime Slurry Storage Tank	0.8	atm	V	SS, 316	411	1	112,590	112,590	1.2	135,108	PDQ$
MS-806	Offgas K.O. Suction Pot	1	15	V	CS	11	1	13,179	13,179	2.3	30,311	PDQ$
MS-809	Offgas Knock Out Drum	1	15	V	CS	11	1	13,179	13,179	2.3	30,311	PDQ$
MS-810	LP Vent Knock Out Drum	1	15	V	CS	2	1	5,546	5,546	2.3	12,755	PDQ$
T-803	Equalization Tank		atm	V	CS	3029	1	190,704	190,704	1.4	266,985	PDQ$
T-804	Anaerobic Reactor			V	CS	7571	3	327,804	983,412	1.4	1,376,777	PDQ$
T-807	Biotreater			V	concrete	2555	2	595,196	1,190,392	1.4	1,666,548	HILL
800*	Pressure Swing Adsorption Oxygen Generator					18	1	528,245	528,245	1.2	633,894	HILL
MS-902	Blowdown Flash Drum			H	CS	2	1	5,825	5,825	2.8	16,309	PDQ$
MS-903	Hydrazine Drum		10	V	SS,316	1	1	5,812	5,812	1.5	8,718	PDQ$
MS-904	Condensate Surge Drum			H	CS	43	1	26,009	26,009	2.8	72,825	PDQ$
MS-906	Plant Air Receiver		150	V	CS	9	1	19,945	19,945	2.8	55,845	PDQ$
MS-907	Instrument Air Receiver		150	V	CS	9	1	19,945	19,945	2.8	55,845	PDQ$
T-901	Process Water Tank	1	atm	V	CS	428	1	56,017	56,017	1.4	78,423	PDQ$
T-905	Backwash Transfer Tank		atm	V	CS	42	1	25,699	25,699	2.3	59,107	PDQ$
T-930	Condensate Collection Tank			V	CS/Rubber	6	1	50,231	50,231	1.6	80,369	PDQ$
T-953	Sterile Water Tank		atm	V	SS	38	1	40,458	40,458	1.5	60,686	PDQ$
T-960	Sterilization Tank		atm	V	SS,304	38	1	40,458	40,458	1.5	60,686	PDQ$
T-961	Cleaning Tank		atm	V	CS	38	1	24,434	24,434	2.3	56,199	PDQ$
T-963	Sterile Rinse Water Tank		atm	V	CS	38	1	24,434	24,434	2.3	56,199	PDQ$
							OSBL		4,551,817	1.44	6,575,893	
							TOTAL		16,934,529	1.54	26,048,373	

$18 m^3 * \frac{1 ft^3}{.0283 m^3}$ *

DATE 08-Dec-94

PUMPS

CSI ITEM #	PUMP NAME	CSI GPM	VARIABLE CSI m^3/h	CSI STREAM	CSI DELTA P psi	CSI hydraulic kW	CSI hydraulic HP	CSI MATERIAL	CSI TYPE	CSI quant	CSI 1993 $/UNIT	CSI INSTALLED FACTOR	CSI INSTALLED TOTAL$	CSI source
pp-101	Flume	2067	469	product s -	5	4	6	Ductile Iron	Lobe	1	10,496	1.4	14,695	Vendor; lobe
pp-201	Sulfuric Acid	7	2	215	75	0.23	0.30	SS	Centrifugal	2	1,950	2.0	7,799	PDQ$; centrifugal
pp-202	Hydrolyzate	1932	439	218	30	25	34	Ductile Iron	Lobe	2	34,082	1.4	95,429	Vendor; lobe
pp-203A/S	Neutralized Hydrolyzate	1929	438	2205	60	50	67	Ductile Iron	Lobe	2	54,652	1.4	153,027	Vendor; lobe
pp-221*	Slurry Metering Pump	-	FIXED		-	1.03	1	Ductile Iron	Lobe	2	3,845	1.4	10,767	Vendor; lobe
pp-303*	Xylose Fermenter Product Pump	1997	454	308	50	43	58	Ductile Iron	Lobe	2	49,416	1.4	138,365	Vendor; lobe
pp-401A/S	Feed	1200	273	FIXED	25	13	17	Ductile Iron	Lobe	2	21,735	1.4	60,858	Vendor; lobe
pp-403A/S	Fermenter Recycle	1200	273	FIXED	50	26	35	Ductile Iron	Lobe	2	34,895	1.4	97,706	Vendor; lobe
pp-411A/S	Prep Tank	1	0.21	415	25	0.01	0.01	CS	Centrifugal	2	1,208	2.8	6,764	PDQ$; centrifugal
pp-412	Cellulase Feed	106	24	420	50	2.31	3	Ductile Iron	Lobe	2	6,665	1.4	18,661	Vendor; lobe
pp-501*	SSF Seed Transfer Pump	422	96	502	50	9	12	SS	Lobe	2	30,303	1.4	84,848	Vendor; lobe
pp-505	Beer Transfer	2089	475	510	120	109	146	SS	Lobe	2	176,856	1.4	495,197	Vendor; lobe
pp-601	Beer Column Bottoms	1908	433	6209	40	33	44	Ductile Iron	Lobe	2	41,122	1.4	115,141	Vendor; lobe
pp-603	Beer Column Reflux	501	114	6212	50	11	15	CS	Centrifugal	2	5,522	2.8	30,922	PDQ$; centrifugal
pp-604A/S	Wash Return	2	0.44	510	40	0.03	0.04	CS	Centrifugal	2	1,208	2.8	6,764	PDQ$; centrifugal
pp-605A/S	Fusel Oil	0	0.06	510	30	0.00	0.00	CS	Centrifugal	2	1,208	2.8	6,764	PDQ$; centrifugal
pp-607	Rectification Column Bottoms	42	10	6213	40	0.73	1	CS	Centrifugal	2	1,386	2.8	7,761	PDQ$; centrifugal
pp-608	Rectification Column Reflux	857	195	6215	100	37	50	CS	Centrifugal	2	10,365	2.8	58,042	PDQ$; centrifugal
pp-621	Ethanol Storage	122	28	6215	30	2	2	CS	Centrifugal	1	2,066	2.8	5,785	PDQ$; centrifugal
pp-622	Bottoms to WWT	42	10	6213	30	1	1	CS	Centrifugal	1	1,208	2.8	3,382	PDQ$; centrifugal
pp-631	Recycled Water	1854	421	6304	45	36	49	CS	Centrifugal	2	10,227	2.8	57,272	PDQ$; centrifugal
pp-632A/S	Sump	-	FIXED	fixed	20	0.87	1	CS	Centrifugal	2	1,517	2.8	8,493	PDQ$; centrifugal
pp-641*	Vent Scrubber Return Ethanol	85	19	6409	30	1	1	CS	Centrifugal	2	1,715	2.8	9,604	PDQ$; centrifugal
			-							ISBL		1.50	1,494,044	

DATE 08-Dec-94

PUMPS

CSI ITEM #	PUMP NAME	CSI GPM	VARIABLE CSI m^3/h	CSI STREAM	CSI DELTA P psi	CSI hydraulic kW	CSI hydraulic HP	CSI MATERIAL	CSI TYPE	CSI quant	CSI 1993 $/UNIT	CSI INSTALLED FACTOR	CSI INSTALLED TOTAL$	CSI source
pp-701A/B/S	Ethanol Export	525	119	none	30	7	9	CS	Centrifugal	3	4,512	2.8	37,898	PDQ$; centrifugal
pp-703A/S	Sulfuric Acid Transfer	100	23	none	40	2	2	SS	Centrifugal	2	4,246	2.0	16,983	PDQ$; centrifugal
pp-704A/S	Fire Water	600	136	none	100	26	35	CS	Centrifugal	2	8,948	2.8	50,111	PDQ$; centrifugal
pp-706A/S	NH3 Transfer	200	45	none	40	3	5	CS	Centrifugal	2	3,451	2.8	19,328	PDQ$; centrifugal
pp-707A/S	Antifoam Transfer	10	2	none	40	0.17	0.23	CS	Centrifugal	2	1,208	2.8	6,764	PDQ$; centrifugal
pp-708A/S	Diesel Fuel	25	6	none	50	0.54	0.73	CS	Centrifugal	2	1,642	2.8	9,195	PDQ$; centrifugal
pp-710A/S	Gasoline Blending	8	2	none	30	0.10	0.13	CS	Centrifugal	2	1,208	2.8	6,764	PDQ$; centrifugal
pp-720A/S	Corn Steep Liquor Transfer	60	14	none	60	2	2	SS	Centrifugal	2	4,039	2.0	16,158	PDQ$; centrifugal
X pp-808A/S	Primary Heat Exchanger Influent Pump	1013	230	none	20	9	12	CS	Centrifugal	2	4,954	2.8	9,907	PDQ$; centrifugal
X pp-809A/S	Seconday Heat Exchanger Influent Pump	1013	230	none	20	9	12	CS	Centrifugal	2	4,954	2.8	9,907	PDQ$; centrifugal
X pp-813A*	Return Activated Sludge	1013	230	none	20	9	12	SS	Centrifugal	2	7,182	2.0	14,363	PDQ$; centrifugal
X pp-813B*	Waste Activated Sludge	506	115	none	20	4	6	SS	Centrifugal	2	5,174	2.0	10,348	PDQ$; centrifugal
X pp-816A/S	Final Effluent	1047	207	none	40	18	24	CS	Centrifugal	2	7,184	2.8	40,229	PDQ$; centrifugal
pp-901A/S	Turbine Condensate	419	190	none	40	7	10	CS	Centrifugal	2	5,040	2.8	28,224	PDQ$; centrifugal
pp-902A/S	Process Water Transfer	2597	602	none	30	34	45	CS	Centrifugal	2	9,874	2.8	55,294	PDQ$; centrifugal
pp-903A/S	Process Water Circulating	2597	602	none	60	68	91	CS	Centrifugal	2	14,080	2.8	78,850	PDQ$; centrifugal
pp-904A/B	Backwash Feed	6000	1363	none	20	52	70	CS	Centrifugal	2	11,917	2.8	66,737	PDQ$; centrifugal
pp-905A/B	Backwash Transfer	50	11	none	20	0.43	0.58	CS	Centrifugal	2	1,465	2.8	8,203	PDQ$; centrifugal
pp-906A/S	Blowdown	50	11	none	25	0.54	0.73	CS	Centrifugal	2	1,642	2.8	9,195	PDQ$; centrifugal
pp-907	Hydrazine Transfer	5	1	none	20	0.04	0.06	SS	Centrifugal	1	1,950	2.0	3,900	PDQ$; centrifugal
pp-908A/S	Boiler Feed Water	1229	237	none	1250	668	896	SS	Centrifugal,staged	2	55,653	1.4	155,829	PDQ$; centrifugal
pp-909A/S	Dearator Feed	1229	237	none	20	11	14	CS	Centrifugal	2	5,470	2.8	30,634	PDQ$; centrifugal
pp-910A/S	Condensate	1229	237	none	30	16	21	CS	Centrifugal	2	6,732	2.8	37,701	PDQ$; centrifugal
pp-913A/S	Well Water	1800	409	none	25	20	26	CS	Centrifugal	2	7,455	2.8	41,747	PDQ$; centrifugal
pp-953	Sterile Water	10	2	none	30	0.13	0.17	SS	Centrifugal	1	1,950	2.0	3,900	PDQ$; centrifugal
pp-960A/S	Supply	20	5	none	50	0.43	0.58	SS	Centrifugal	2	2,330	2.0	9,321	PDQ$; centrifugal
pp-965A/B/C/S	CIP/CS Sump	20	5	none	30	0.26	0.35	CS	Centrifugal	4	1,208	2.8	13,528	PDQ$; centrifugal
										OSBL		2.27	791,018	
										TOTAL		1.70	2,285,062	

DATE 08-Dec-94

SOLIDS HANDLING EQUIPMENT

CSI ITEM #	CSI EQUIPMENT NAME	CSI TYPE	SERI DUTY DESCRIPTION	CSI kW/UNIT	CSI MATERIAL	CSI QUANT	CSI 1993 $/UNIT	CSI INSTALLED FACTOR	CSI INSTALLED TOTAL $	CSI SOURCE
GS-103	Magnetic Chip Cleaner		remove down to 0.5" nuts	5	CS	1	10,882	1.2	13,058	SERI escalated 91-93
GM-101A/B/S	Front End Loaders	Diesel		-		3	164,861	1.2	494,582	SERI escalated 91-93
GS-101	Radial Stacking Conveyor	Paddle	1500 ton/h wght, 120ft x 30	11	CS	1	131,984	1.4	184,777	SERI escalated 91-93
GS-102	Belt Conveyer	Belt	240ft x 6.5ft wide, 200 t/h	7	CS	1	202,589	1.4	283,624	SERI escalated 91-93
GS-104	Milled Chip Belt Conveyor	Belt	50ft x 6.5ft wide, 200 t/h	4	CS	1	42,272	1.4	59,181	SERI escalated 91-93
GY-101A/B/C/D	Wood Chip Unloader with Scale	23-TON/LOAD	10 van/hr/loader	26	CS	4	41,648	1.2	199,913	SERI escalated 91-93
GG-101A/B/C/D	Disk Refiner		128 hp-h/dry ton	1864	CS	4	375,000	1.3	1,950,000	Andritz Sprout- Bauer,
GS-223	Lime Unloading Conveyor	Bucket	120 ft high, 100t/h	37	CS	1	19,022	1.4	26,631	SERI escalated 91-93
GS-226*	Rail Car weigh station			-		1	60,000	1.2	72,000	Fairbanks Scales
GS-611A/B	Sludge Screws	Screw, 18 in	150 FEET	7	CS	2	19,925	1.4	55,790	CPEIEC
						ISBL		1.29	3,339,557	
GS-801	Sludge Screws	Screw, 9 in	100 FEET	1	CS	2	14,523	1.4	40,664	CPEIEC
new*	Bar Screens	Mechanically Cleaned	1/2 inch	-		1	59,085	1.2	70,902	Hill
						OSBL		1.27	111,566	
						TOTAL		1.29	3,451,123	

1991 → 1993
~ 1.057

DATE 08-Dec-94

MISCELLANEOUS

CSI ITEM #	*SERI* EQUIPMENT NAME	DUTY DESCRIPTION	*CSI* HP /1000 gal	*CSI* variable total gal	*CSI* MATERIAL	*CSI* QUANT	*CSI* BASE $/UNIT	*CSI* INSTALLED FACTOR	*CSI-sensitivity* INSTALLED TOTAL $	*CSI* SOURCE
GA-201	Line Mixer			*15*	SS, 316	1	222	1.2	267	PDQ$ Agitator: In-line mixer
GA-203	Blowdown Tank Agitator	Single Impeller	2	*8153*	SS, 316	3	6,543	1.2	23,555	PDQ$ Agitator: Turbine mixer
GA-213	Neutralization Tank Agitator	Single Impeller	2	*24152*	SS, 316	3	9,832	1.2	35,396	PDQ$ Agitator: Turbine mixer
GF-201	Desiccant Air Filter	0.5 cfm		none	Silica	1	1,057	1.4	1,480	SERI, escalated 91-93
MR-201/MR-202	Pre-Hydrolysis System (w/ plug screw feeder)	1920 tons/day		none	SS, 316	1	4,560,000	1.5	6,840,000	Sunds DeVibrators
GA-301	Seed Hold Tank Agitator	Single Impeller/40 HP	0.2	*309025*	SS, 316	3	10,784	1.2	38,824	PDQ$ Agitator: Turbine mixer
GA-303A-H	Xylose Fermenter Agitator	Single Impeller	0.1	*6000000*	SS, 316	*24*	11,596	1.2	333,964	PDQ$ Agitator: Turbine mixer
GA-305	First Seed Vessel Agitator	Single Impeller	0.2	*309025*	SS, 316	3	10,784	1.2	38,824	PDQ$ Agitator: Turbine mixer
GA-306	Second Seed Vessel Agitator	Single Impeller	1.5	*30902*	SS, 316	3	9,681	1.2	34,853	PDQ$ Agitator: Turbine mixer
GA-307	Third Seed Vessel Agitator	Single Impeller	1.5	*3090*	SS, 316	1	9,306	1.2	11,168	PDQ$ Agitator: Turbine mixer
GA-308	Fourth Seed Vessel Agitator	Single Impeller	1.5	*309*	SS, 316	1	3,924	1.2	4,709	PDQ$ Agitator: Turbine mixer
GA-400	Prep Tank Agitator	Single Impeller/10 HP	1	*1131*	SS, 316	1	5,483	1.2	6,580	PDQ$ Agitator: Turbine mixer
GA-401A/B/C	Fermenter Agitator	Single Impeller	1.18	*637975*	SS, 316	*6*	21,234	1.2	152,884	PDQ$ Agitator: Turbine mixer
GA-405	Feed Tank Agitator	Single Impeller/300 HP	2	*197196*	SS, 316	3	21,609	1.2	77,792	PDQ$ Agitator: Turbine mixer
GA-410	Hold Tank Agitator	Single Impeller/200 HP	1	*197196*	SS, 316	3	16,663	1.2	59,986	PDQ$ Agitator: Turbine mixer
GA-411	First Seed Vessel Agitator	Single Impeller	3.5	*22480*	SS, 316	6	9,104	1.2	65,548	PDQ$ Agitator: Turbine mixer
GA-412	Second Seed Vessel Agitator	Single Impeller	3.5	*1136*	SS, 316	2	6,775	1.2	16,259	PDQ$ Agitator: Turbine mixer
GA-413	Third Seed Vessel Agitator	Single Impeller	3.5	*57*	SS, 316	2	2,203	1.2	5,287	PDQ$ Agitator: Turbine mixer
GA-500A-AA	SSF Fermenter Agitator	Single Impeller	0.1	22500000	SS, 316	*90*	11,596	1.2	1,252,365	PDQ$ Agitator: Turbine mixer
GA-501A	Seed Hold Tank Agitator (S.c.)	Single Impeller/50 HP	0.1	*573989*	SS, 316	3	10,489	1.2	37,762	PDQ$ Agitator: Turbine mixer
GA-510A	First Seed Vessel Agitator (S.c.)	Single Impeller	0.1	*573989*	SS, 316	3	10,489	1.2	37,762	PDQ$ Agitator: Turbine mixer
GA-511A	Second Seed Vessel Agitator (S.c.)	Single Impeller	0.5	*57399*	SS, 316	3	8,088	1.2	29,118	PDQ$ Agitator: Turbine mixer
GA-512A	Third Seed Vessel Agitator (S.c.)	Single Impeller	0.5	*5740*	SS, 316	1	7,775	1.2	9,330	PDQ$ Agitator: Turbine mixer
GA-513A	Fourth Seed Vessel Agitator (S.c.)	Single Impeller	0.5	*574*	SS, 316	1	3,279	1.2	3,934	PDQ$ Agitator: Turbine mixer
GC-609A/B/C	Centrifuge	Solid Bowl		*none*		3	237,780	1.3	927,342	SERI, escalated 91-93
FAN-640*	FAN	centrifugal		*none*	Steel	1	19,272	1.4	26,981	PDQ$ Fan; Centrifugal
						ISBL		1.40	10,071,967	

DATE 08-Dec-94

MISCELLANEOUS

CSI ITEM #	*SERI* EQUIPMENT NAME	DUTY DESCRIPTION	*CSI* HP /1000 gal	*CSI* variable total gal	*CSI* MATERIAL	*CSI* QUANT	*CSI* BASE $/UNIT	*CSI* INSTALLED FACTOR	*CSI-sensitivity* INSTALLED TOTAL $	*CSI* SOURCE
GF-703	Desiccant Air Filter	1500 cfm		*none*	Silica	1	41,004	1.4	57,405	SERI, escalated 91-93
GC-801	Sludge Centrifuge	Solid Bowl		*none*	CS	1	135,270	1.3	175,852	SERI, escalated 91-93
GO-806	Offgas Burner			*none*	CS	1	21,136	1.2	25,363	SERI, escalated 91-93
GV-808	Secondary Clarifier	Center feed, 100 ft diameter		HILL; quanti	CS	2	50,000	1.2	120,000	HILL
PB-810	Offgass Blower	2630 cfm, 20 psig discharge		*none*	CS	1	78,520	1.4	109,928	SERI, escalated 91-93
PB-817A/S	LP Vent Blower	2400 cfm, 20 psig discharge		*none*	CS	2	77,146	1.4	216,010	SERI, escalated 91-93
OSBL*	Equalization Tank Mixers		0.2	*800074*	SS	3	23,262	1.2	83,742	PDQ$ Agitator: Turbine mixer
OSBL*	Nutrient Feed System			HILL		1	24,722	1.2	29,666	HILL;escalated
OSBL*	Anaerobic Mixers			quantity	SS	*12*	29,444	1.2	423,997	PDQ$ Agitator: Turbine mixer
OSBL*	Aeration Tank Mixers			HILL		*8*	14,456	1.2	138,773	
OSBL*	Mist System and Backup Carbon			HILL		1	177,490	1.2	212,988	HILL;escalated
OSBL*	Biofilter			HILL		1	6,867	1.2	8,241	HILL;escalated
						OSBL		1.25	1,601,965	

DATE 08-Dec-94

MISCELLANEOUS

CSI ITEM #	*SERI* EQUIPMENT NAME	DUTY DESCRIPTION	*CSI* HP /1000 gal	*CSI* variable total gal	*CSI* MATERIAL	*CSI* QUANT	*CSI* BASE $/UNIT	*CSI* INSTALLED FACTOR	*CSI-sensitivity* INSTALLED TOTAL $	*CSI* SOURCE
GT-912	Cooling Tower System	field erected, Douglas Fir, gpm ->		*64,941*	**64,941**	1	2,563,103	1.2	3,075,724	PDQ$ Cooling Tower
GA-960	Sterilization Tank Agitator	Single Impeller	1	*10,000*	SS, 316	1	12,417	1.2	14,900	PDQ$ Agitator: Turbine mixer
GA-961	Cleanig Tank Agitator	Single Impeller	1	*10,000*	SS, 316	1	12,417	1.2	14,900	PDQ$ Agitator: Turbine mixer
GF-901	Sand Filter	34ft dia. x 8ft high		*none*	CS	1	41,849	1.4	58,589	SERI, escalated 91-93
GU-903A/B	Demineralizers	200 gpm		*none*	CS	2	325,706	1.2	781,694	SERI, escalated 91-93
GU-904A/S	Condensate Polisher	1400 gpm		*none*	SS	2	105,680	1.2	253,632	SERI, escalated 91-93
GU-907	Hydrazine Addition Package	150 gal tank, 2 pumps, 1 agitator		*none*	SS	1	15,852	1.2	19,022	SERI, escalated 91-93
GU-908	Ammonia Addition Package	150 gal tank, 2 pumps, 1 agitator		*none*	SS	1	15,852	1.2	19,022	SERI, escalated 91-93
GU-909	Phosphate Addition Package	150 gal tank, 2 pumps, 1 agitator		*none*	SS	1	15,852	1.2	19,022	SERI, escalated 91-93
GV-906	Dearator	1700 gpm, 17000 gal		*none*	CS/SS	1	140,554	2.8	393,552	SERI, escalated 91-93
GY-910	Instrument Air Dryer	600 scfm/ desiccant		*none*	CS	1	24,412	1.4	34,177	SERI, escalated 91-93
GZ-911	Turbo Generator	MW ->		38.1	**38**	1	9,174,169	1.5	9,174,169	In-house report; 0.7 scaling facto
HB-901A	Steam Boiler	field erected, Lb/hr ->		*497,402*	**497,402**	1	18,999,998	1.3	24,699,997	NREL; 0.5 scaling factor
PC-911	Air Compressor	1000 scfm @ 115 psia		**1000**	CS	1	55,258	1.3	71,835	PDQS, 140 ACFM
PK-950A/B/S	Air Compressor Package(fermentation)	CS, @ 60 psia, SCFM ->		24,440	**24,440**	3	1,419,077	1.2	5,108,677	PDQS, 7000 ACFM
PK-951	Chilled Water Package	CS, 50F, gpm ->		*7496*	**7,496**	1	1,022,607	1.2	1,227,129	SERI, escalated 91-93
						UTILITY TOTAL		1.32	44,966,042	
						OSBL TOTAL		1.31	46,568,007	
						TOTAL		1.33	**56,639,974**	

DATE 08-Dec-94

TOWERS

CSI ITEM #	EQUIPMENT NAME	*CSI* diameter m	*CSI* height m	*CSI* trays**	*CSI* VOLUME cubic m	*CSI* Design Pressure k Pa	*CSI* Design Pressure psia	*CSI* Design Temp °C	Material Shell/Inernals	*CSI* QUANT	*CSI* BASE $/UNIT	*CSI* INSTALLED FACTOR	*CSI-sensitivity* INSTALLED TOTAL $	*CSI* SOURCE
AS-601	Beer Column	4	35	40	436	621	90	204	CS/CS	1	317,791	3	953,372	PDQ$
AS-602	Rectification Column	4	48	70	506	310	45	204	lined CS/SS	1	593,413	3	1,780,239	PDQ$
AS-640*	Vent Scrubber	4	10	26	123	172	25	93	CS/PP	1	159,887	3	479,661	PDQ$
									1 inch PALL Rings		**1,071,091**	**3**	**3,213,272**	

* Equipment added to design

** Scrubber Column number represents feet of packing

DATE 08-Dec-94

HEAT EXCHANGER

CSI ITEM #	EQUIPMENT NAME	stream	C Q - KW	stream	CSI Q - out 1 KW	CSI Heat duty MM W	stream	C	stream	C	CSI - proce utility side T2 - in (C)	T2 - out ((	LMTD	CSI m³	CSI TUBE MAT.	CSI SHELL MAT.	CSI DESIGN PRESS. k Pa	CSI DESIGN TEMP. °C	CSI TYPE	CSI quant	CSI 1993 $/UNIT	CSI INSTALLED FACTOR	CSI INSTALLED TOTAL $	CSI SOURCE
TT-220	Feed Cooler	s-2205	-1830000	s-2206	-1.96E+06	31	s-2205	102	s-2206	37	30	44	24	1006	CS	CS	689	38	Fixed Tube	1	127,403	2.1	267,547	PDQ$ Fixed Sheet
TT-301A*	Water Cooler	s-3101	-105600	s-3102	-1.07E+05	1.6	s-3101	100	s-3102	37	30	44	24	120	CS	CS	689	38	Fixed Tube	1	29,567	2.1	62,091	PDQ$ Fixed Sheet
TT-401A*	Water Cooler	s-4101	-194.3	s-4102	-1.98E+02	0.0034	s-4101	100	s-4102	36	30	44	21	0	CS	CS	689	38	Fixed Tube	1	310	2.1	651	PDQ$ Fixed Sheet
TT-401B*	Water Cooler	s-4102	-197.7	s-4103	-1.98E+02	0.0004	s-4102	36	s-4103	29	10	13	20	0.02	CS	CS	689	38	Fixed Tube	1	78	2.1	163	PDQ$ Fixed Sheet
TT-402A	Water Cooler	s-4118	-63360	s-4119	-64480	1.12	s-4118	100	s-4119	36	30	44	21	42	CS	CS	689	38	Fixed Tube	1	14,634	2.1	30,731	PDQ$ Fixed Sheet
TT-402B*	Water Cooler	s-4119	-64480	s-414	-64620	0.14	s-4119	36	s-414	27	10	13	19	6	CS	CS	689	38	Fixed Tube	1	3,564	2.1	8,187	PDQ$ Fixed Sheet
TT-607	Fusel Oil Cooler	x		x		0.02	80	80	38	38	30	44	19	0.99	CS	CS	689	38	Fixed Tube	1	1,222	2.1	2,667	PDQ$ Fixed Sheet
TT-613	Mash Trim Heater	x		x		62.4	s-6203	120	s-6204	120	148	148	28	1168	CS	CS	1034	66	Fixed Tube	1	142,943	2.1	300,181	PDQ$ Fixed Sheet
TT-615	Flash/Mash Exchanger	s-6201	-1.96E+06	s-6202	-1851000	10	s-6201	76	s-6202	97	102	99	12	373	CS	CS	1034	66	Fixed Tube	1	63,520	2.1	133,392	PDQ$ Fixed Sheet
TT-616	Scrub/Flash Exchanger	s-6410	-8.28E+04	s-6205	-81570	1.27	s-6410	37	s-6205	94	(s-216) 99	(s-6207) 59	11	87	CS	CS	1034	66	Fixed Tube	1	23,864	2.1	50,113	PDQ$ Fixed Sheet
TT-621	Beer Column Reboiler	x		x		47.8	s-6206	120	s-6208	149	(s-6207) 148	(s-6208) 148	26	472	CS	CS	1034	66	Reboiler	2	67,339	2.1	366,622	PDQ$ Reboiler
TT-622	Beer Column Condenser/ Rectification Column Reboiler	s-6219	-229100	s-6220	-206100	23	s-6219	113	s-6220	114	124	119	7	1403	CS	CS	689	38	Fixed Tube	1	160,976	2.1	338,049	PDQ$ Fixed Sheet
TT-623	Rectification Column O/H Condenser	s-6106	-1861000	s-6201	-1861000	20	s-6106	37	s-6201	76	(s-6222) 81	(s-6223) 80	18	496	CS	CS	689	38	Fixed Tube	1	77,836	2.1	163,456	PDQ$ Fixed Sheet
TT-624	Beer Column O/H Trim. Condenser	x		x		32.7	s-6223	118	s-6224	118	(s-6216) 30	(s-6217) 44	61	178	CS	CS	689	38	Fixed Tube	1	37,797	2.1	79,375	PDQ$ Fixed Sheet
TT-625	Beer Column Bottoms/Scrub Exchanger	s-6205	-81570	s-6206	-81000	0.57	s-6205	94	s-6206	120	149	149	40	6	CS	CS	689	38	Fixed Tube	1	4,150	2.1	8,714	PDQ$ Fixed Sheet
TT-626	Rectification Column O/H Trim. Condenser	x		x		28.9	s-6217	60	s-6218	79	(s-6209) 30	(s-6210) 44	42	302	CS	CS	689	38	Fixed Tube	1	54,710	2.1	114,891	PDQ$ Fixed Sheet
TT-627	Rectification Column Bottoms Trim Reboiler	x		x		28	s-6220	114	s-6221	113	148	148	34	204	CS	CS	689	38	Fixed Tube	1	41,592	2.1	87,343	PDQ$ Fixed Sheet
TT-628	Beer Still Bottoms Trim Cooler	S-6225	-1839000	S-6211	-1845000	-6	S-6225	125	S-6211	114	30	44	82	67	CS	CS	689	178	Fixed Tube	1	18,142	2.1	38,096	PDQ$ Fixed Sheet
TT-629	Mash Beer Bottoms Exchanger	S-6202	-1861000	S-6203	-1839000	12	S-6202	97	S-6203	120	(s-6210) 148	(s-6225) 125	65	145	CS	CS	689	178	Fixed Tube	1	32,685	2.1	68,639	PDQ$ Fixed Sheet
COILS	Xylose Fermentation Coils	3123	-1911000	3120	-1921000	10	3123	57	3120	37	10	13	35	506	CS	-	689	38	Coils	4802 ft	8	2.5	38,412	vendor
COILS	Xylose Seed Fermentation Coils	3122	-181800	3106	-183000	1.20	3122	50	3106	37	10	13	32	67	CS	-	689	38	ID = 4.5 in.	632	8	2.5	5,056	vendor
COILS	Cellulase Fermentation Coils	4125	-105600	4126	-108800	3.2	4125	59	4126	28	10	13	30	189	CS	-	689	38	Coils	1096 ft	11	2.5	12,046	vendor
COILS	Cellulase Seed Fermentation Coils	4135	-334	4110	-365.2	0.0212	4135	67	4110	26	10	13	33	1	CS	-	689	38	ID = 7.3 in.	7	11	2.5	73	vendor
COILS	SSF Fermentation Coils	5136	-2000000	5125	-2006000	6.00	5136	48	5125	37	10	13	31	343	CS	-	689	38	Coils	3976 ft	7	2.5	27,833	vendor
COILS	SSF Seed Fermentation Coils	5112	-400900	5113	-402400	1.5	5112	48	5113	37	10	13	31	96	CS	-	689	38	ID = 3.5 in.	994	7	2.5	6,959	vendor
																					ISBL	2.11	2,211,360	
TT-801	Offgas Cooler													46	CS	CS	689	38	Fixed Tube	1	15,667	2.1	32,901	PDQ$ Fixed Sheet
TT-802	Feed Cooler(Primary Heat Exchanger)													304	CS	CS	689	38	Fixed Tube	1	54,981	2.1	115,460	PDQ$ Fixed Sheet
TT-803A	Seconday Heat Exchanger A: Cooling Water													567	CS	CS	689	38	Fixed Tube	1	85,173	2.1	178,863	PDQ$ Fixed Sheet
TT-953	Water Sterilizer													5	CS	CS	1034	66	Fixed Tube	1	3,419	2.1	7,182	PDQ$ Fixed Sheet
																					OSBL	2.10	334,387	
																					TOTAL	2.11	2,545,746	

DATE 08-Dec-94

CAPITAL COST ESTIMATE

	ISBL			OSBL			TOTAL			COMMENTS
	BASE	INSTALLED	f*	BASE	INSTALLED	f*	BASE	INSTALLED	f*	
TANKS & VESSELS	12,382,712	19,472,481	1.57	4,551,817	6,575,893	1.44	16,934,529	26,048,373	1.54	
PUMPS	993,520	1,494,044	1.50	348,870	791,018	2.27	1,342,390	2,285,062	1.70	
SOLIDS HANDLING	2,585,345	3,339,557	1.29	88,131	111,566	1.27	2,673,475	3,451,123	1.29	
HEAT EXCHANGERS	1,046,142	2,211,360	2.11	159,232	334,387	2.10	1,205,374	2,545,746	2.11	
MISCELLANEOUS	7,190,473	10,071,967	1.40	1,278,062	1,601,965	1.25	8,468,535	11,673,932	1.38	
COLUMNS	1,071,091	3,213,272	3.00				1,071,091	3,213,272	3.00	
UTILITIES				34,156,286	44,966,042		34,156,286	44,966,042	1.32	
	25,269,282	**39,802,681**	1.58	**40,582,398**	**54,380,870**	1.34				
Building					1,592,107					4% of ISBL installed
Site Development					3,582,241					9.0% of ISBL installed
Additional Piping					1,791,121					4.5% of ISBL installed
Total	**25,269,282**	**39,802,681**		**40,582,398**	**61,346,339**		**65,851,681**	**101,149,020**	1.54	
TOTAL ERECTED COST		39,802,681			61,346,339			**101,149,020**		
Proratable Costs		3,980,268			6,134,634			10,114,902		10% of TEC
Field Expenses		3,980,268			6,134,634			10,114,902		10% of TEC
Home Office Construction and Fee		9,950,670			15,336,585			25,287,255		25% of TEC
Contingency		1,194,080			1,840,390			3,034,471		3% of TEC
		ISBL			OSBL					
TOTAL INVESTMENT		58,907,967			90,792,582			**149,700,549**		
Owner's Cost								14,970,055		10% of Total Investment
TOTAL								**164,670,604**		

* f is the average installation factor.

DATE 08-Dec-94

OUTPUT BY SECTION

PLANT AREA		Chem Systems BASE EQUIPMENT COST ($)	INSTALLED EQUIPMENT COST ($)
	100 WOOD HANDLING		
pp-101	Flume	10,496	14,695
GS-103	Magnetic Chip Cleaner	10,882	13,058
GM-101A/B/S	Front End Loaders	412,152	494,582
GS-101	Radial Stacking Conveyor	131,984	184,777
GS-102	Belt Conveyer	202,589	283,624
GS-104	Milled Chip Belt Conveyor	42,272	59,181
GY-101A/B/C/D	Wood Chip Unloader with Scale	166,594	199,913
GG-101A/B/C/D	Disk Refiner	1,500,000	1,950,000
	TOTAL($ MM)	**2.48**	**3.20**
	200 PREHYDROLYSIS		
GS-223	Lime Unloading Conveyor	19,022	26,631
T-201	Sulfuric Acid Storage	45,371	54,445
T-203	Blowdown Tank	36,337	43,605
T-206	Neutralization Reaction Tank	63,956	76,747
T-220*	Lime Slurry Tank	35,387	42,465
pp-201	Sulfuric Acid	3,900	7,799
pp-202	Hydrolyzate	68,163	95,429
pp-203A/S	Neutralized Hydrolyzate	109,305	153,027
pp-221*	Slurry Metering Pump	7,691	10,767
TT-220	Feed Cooler	127,403	267,547
GA-201	Line Mixer	222	267
GA-203	Blowdown Tank Agitator	19,629	23,555
GA-213	Neutralization Tank Agitator	29,497	35,396
GF-201	Desiccant Air Filter	1,057	1,480
MR-201/MR-202	Pre-Hydrolysis System (w/ plug screw feeder)	4,560,000	6,840,000
GS-226*	Rail Car weigh station	60,000	72,000
	TOTAL ($ MM)	**5.19**	**7.75**
	300 XYLOSE FERMENTATION		
	Seed Fermenters		
FM-305/10	Xylose Seed Fermenter	105,132	147,185
FM-305/10	Xylose Seed Fermenter	36,361	50,906
FM-305/10	Xylose Seed Fermenter	13,824	31,796
FM-305/10	Xylose Seed Fermenter	4,525	10,408
FM-305/10	Xylose Seed Fermenter	1,481	3,407
FM-305/10	Xylose Seed Fermenter	485	1,115
	Total ($ MM)	**0.16**	**0.24**
FM-303	**Xylose Fermenters**	**1.47**	**2.05**
	Remaining Equipment		
T-301	Seed Hold Tank	105,132	147,185
T-321	Base Tank	14,203	39,768
pp-303*	Xylose Fermenter Product Pump	98,832	138,365
TT-301A*	Water Cooler	29,567	62,091
COILS	Xylose Fermentation Coils	15,365	38,412
COILS	Xylose Seed Fermentation Coils	2,022	5,056
GA-301	Seed Hold Tank Agitator	32,353	38,824
GA-303A-H	Xylose Fermenter Agitator	278,303	333,964
GA-305	First Seed Vessel Agitator	32,353	38,824
GA-306	Second Seed Vessel Agitator	29,044	34,853
GA-307	Third Seed Vessel Agitator	9,306	11,168
GA-308	Fourth Seed Vessel Agitator	3,924	4,709
	Total ($ MM)	**0.65**	**0.89**
	TOTAL ($ MM)	2.28	3.19

DATE 08-Dec-94

	400 CELLULASE PRODUCTION		
	Seed Fermenters		
FM-401/4	Cellulase Seed Fermenter	70,710	98,994
FM-401/4	Cellulase Seed Fermenter	17,897	26,846
FM-401/4	Cellulase Seed Fermenter	3,702	5,553
FM-401/4	Cellulase Seed Fermenter	766	1,149
	Total ($ MM)	**0.09**	**0.13**
FM-400	**Cellulase Fermenter ($ MM)**	**0.25**	**0.41**
	Remaining Equipment		
T-400	Media Prep Tank	8,490	19,526
T-403A/B	Antifoam Tank	7,707	17,725
T-405	Sterile Feed Tank	79,361	111,105
T-410A/B	Cellulase Hold Tank	117,757	188,410
pp-401A/S	Feed	43,470	60,858
pp-403A/S	Fermenter Recycle	69,790	97,706
pp-411A/S	Prep Tank	2,416	6,764
pp-412	Cellulase Feed	13,329	18,661
TT-401A*	Water Cooler	310	651
TT-401B*	Water Cooler	78	163
TT-402A	Water Cooler	14,634	30,731
TT-402B*	Water Cooler	3,884	8,157
COILS	Cellulase Fermentation Coils	4,819	12,048
COILS	Cellulase Seed Fermentation Coils	29	73
GA-400	Prep Tank Agitator	5,483	6,580
GA-401A/B/Cp451X	Fermenter Agitator	127,403	152,884
GA-405	Feed Tank Agitator	64,827	77,792
GA-410	Hold Tank Agitator	49,988	59,986
GA-411	First Seed Vessel Agitator	54,623	65,548
GA-412	Second Seed Vessel Agitator	13,549	16,259
GA-413	Third Seed Vessel Agitator	4,406	5,287
	Total ($ MM)	**0.69**	**0.96**
	TOTAL ($ MM)	**1.03**	**1.50**
	500 SSF		
	Seed Fermenters		
FM-501/6	SSF Seed Fermenter (S.c.)	253,789	406,063
FM-501/6	SSF Seed Fermenter (S.c.)	70,124	112,199
FM-501/6	SSF Seed Fermenter (S.c.)	26,660	61,319
FM-501/6	SSF Seed Fermenter (S.c.)	8,999	13,498
FM-501/6	SSF Seed Fermenter (S.c.)	2,680	4,020
FM-501/6	SSF Seed Fermenter (S.c.)	798	1,197
	Total ($ MM)	**0.36**	**0.60**
FM-500	**SSF Fermenter ($ MM)**	**9.18**	**14.69**
	Remaining Equipment		
T-501A	Seed Hold Tank (S.c.)	253,789	406,063
pp-501*	SSF Seed Transfer Pump	60,605	84,848
pp-505	Beer Transfer	353,712	495,197
COILS	SSF Fermentation Coils	11,133	27,833
COILS	SSF Seed Fermentation Coils	2,783	6,958
GA-500A-AA	SSF Fermenter Agitator	1,043,637	1,252,365
GA-501A	Seed Hold Tank Agitator (S.c.)	31,468	37,762
GA-510A	First Seed Vessel Agitator (S.c.)	31,468	37,762
GA-511A	Second Seed Vessel Agitator (S.c.)	24,265	29,118
GA-512A	Third Seed Vessel Agitator (S.c.)	7,775	9,330
GA-513A	Fourth Seed Vessel Agitator (S.c.)	3,279	3,934
	Total ($ MM)	**1.82**	**2.39**
	TOTAL ($ MM)	11.37	17.68

14.69
5.24

17.68 +
3.19
20.87

DATE 08-Dec-94

	600 ETHANOL RECOVERY		
AS-602	**Rectification Column**	**0.59**	**1.78**
	Remaining Equipment		
AS-601	Beer Column	317,791	953,372
AS-640*	Vent Scrubber	159,887	479,661
T-601	Degasser Drum	43,374	60,723
T-602	Beer Column Reflux Drum	9,183	25,713
T-603	Fusel Oil Decanter	5,208	14,584
T-605	Rectification Column Reflux Drum	9,183	25,713
T-607*	Extraction Still Reflux Drum	9,183	25,713
T-630	Recycled Water Tank	23,590	54,258
pp-601	Beer Column Bottoms	82,244	115,141
pp-603	Beer Column Reflux	11,044	30,922
pp-604A/S	Wash Return	2,416	6,764
pp-605A/S	Fusel Oil	2,416	6,764
pp-607	Rectification Column Bottoms	2,772	7,761
pp-608	Rectification Column Reflux	20,729	58,042
pp-621	Ethanol Storage	2,066	5,785
pp-622	Bottoms to WWT	1,208	3,382
pp-631	Recycled Water	20,454	57,272
pp-632A/S	Sump	3,033	8,493
pp-641*	Vent Scrubber Return Ethanol	3,430	9,604
GS-611A/B	Sludge Screws	39,850	55,790
TT-607	Fusel Oil Cooler	1,222	2,567
TT-613	Mash Trim Heater	142,943	300,181
TT-615	Flash/Mash Exchanger	63,520	133,392
TT-616	Scrub/Flash Exchanger	23,864	50,113
TT-621	Beer Column Reboiler	174,677	366,822
TT-622	Beer Column Condenser/Rectification Column R	160,976	338,049
TT-623	Rectification Column O/H Condenser	77,836	163,456
TT-624	Beer Column O/H Trim. Condenser	37,797	79,375
TT-625	Beer Column Bottoms/Scrub Exchanger	4,150	8,714
TT-626	Rectification Column O/H Trim. Condenser	54,710	114,891
TT-627	Rectification Column Bottoms Trim Reboiler	41,592	87,343
TT-628	Beer Still Bottoms Trim Cooler	18,142	38,098
TT-629	Mash Beer Bottoms Exchanger	32,685	68,639
GC-609A/B/C	Centrifuge	713,340	927,342
FAN-640*	FAN	19,272	26,981
	Total ($ MM)	**2.34**	**4.71**
	TOTAL ($ MM)	**2.93**	**6.49**
	700 OFF-SITE TANKAGE		
T-701A/B	Ethanol Product Tank	669,242	936,938
T-703	Sulfuric Acid Storage Tank	119,564	143,477
T-704	Fire Water Tank	143,506	200,909
T-706A/B	NH3 Storage Tank	85,160	238,449
T-707	Antifoam Storage Tank	23,611	54,305
T-708	Diesel Fuel Tank	31,935	44,709
T-710	Gasoline Storage Tank	64,771	90,679
T-720	Corn Steep Liquor Tank	37,519	52,527
T-730*	Lime Slurry Storage Tank	112,590	135,108
pp-701A/B/S	Ethanol Export	13,535	37,898
pp-703A/S	Sulfuric Acid Transfer	8,492	16,983
pp-704 /S	Fire Water	17,897	50,111
pp-706A/S	NH3 Transfer	6,903	19,328
pp-707A/S	Antifoam Transfer	2,416	6,764
pp-708A/S	Diesel Fuel	3,284	9,195
pp-710A/S	Gasoline Blending	2,416	6,764
pp-720A/S	Corn Steep Liquor Transfer	8,079	16,158
GF-703	Desiccant Air Filter	41,004	57,405
	TOTAL ($ MM)	1.39	2.12

DATE 08-Dec-94

	800 WASTE TREATMENT		
MS-806	Offgas K.O. Suction Pot	13,179	30,311
MS-809	Offgas Knock Out Drum	13,179	30,311
MS-810	LP Vent Knock Out Drum	5,546	12,755
T-803	Equalization Tank	190,704	266,985
T-804	Anaerobic Reactor	983,412	1,376,777
T-807	Biotreater	1,190,392	1,666,548
800*	Pressure Swing Adsorption Oxygen Generator	528,245	633,894
pp-808A/S	Primary Heat Exchanger Influent Pump	3,538	9,907
pp-809A/S	Seconday Heat Exchanger Influent Pump	3,538	9,907
pp-813A*	Return Activated Sludge	7,182	14,363
pp-813B*	Waste Activated Sludge	5,174	10,348
pp-816A/S	Final Effluent	14,368	40,229
GS-801	Sludge Screws	29,046	40,664
new*	Bar Screens	59,085	70,902
TT-801	Offgas Cooler	15,667	32,901
TT-802	Feed Cooler(Primary Heat Exchanger)	54,981	115,460
TT-803A	Seconday Heat Exchanger A: Cooling Water	85,173	178,863
GC-801	Sludge Centrifuge	135,270	175,852
GO-806	Offgas Burner	21,136	25,363
GV-808	Secondary Clarifier	100,000	120,000
PB-810	Offgass Blower	78,520	109,928
PB-817A/S	LP Vent Blower	154,293	216,010
OSBL*	Equalization Tank Mixers	69,785	83,742
OSBL*	Nutrient Feed System	24,722	29,666
OSBL*	Anaerobic Mixers	353,331	423,997
OSBL*	Aeration Tank Mixers	115,644	138,773
OSBL*	Mist System and Backup Carbon	177,490	212,988
OSBL*	Biofilter	6,867	8,241
	TOTAL ($ MM)	**4.44**	**6.09**

DATE 08-Dec-94

900 UTILITIES

	Boiler Feed Water		
MS-902	Blowdown Flash Drum	5,825	16,309
MS-903	Hydrazine Drum	5,812	8,718
MS-904	Condensate Surge Drum	26,009	72,825
T-930	Condensate Collection Tank	50,231	80,369
pp-906A/S	Blowdown	3,284	9,195
pp-907	Hydrazine Transfer	1,950	3,900
pp-909A/S	Dearator Feed	10,941	30,634
pp-910A/S	Condensate	13,465	37,701
GU-903A/B	Demineralizers	651,412	781,694
GU-904A/S	Condensate Polisher	211,360	253,632
GU-907	Hydrazine Addition Package	15,852	19,022
GU-908	Ammonia Addition Package	15,852	19,022
GU-909	Phosphate Addition Package	15,852	19,022
GV-906	Dearator	140,554	393,552
pp-908A/S	Boiler Feed Water	111,307	155,829
HB-901A	Steam Boiler	18,999,998	24,699,997
	Total ($ MM)	**20.28**	**26.60**
	Process Water		
GF-901	Sand Filter	41,849	58,589
T-901	Process Water Tank	56,017	78,423
T-905	Backwash Transfer Tank	25,699	59,107
pp-902A/S	Process Water Transfer	19,748	55,294
pp-903A/S	Process Water Circulating	28,161	78,850
pp-904A/B	Backwash Feed	23,835	66,737
pp-905A/B	Backwash Transfer	2,930	8,203
pp-913A/S	Well Water	14,910	41,747
	Total ($ MM)	**0.21**	**0.45**
	Turbogenerator		
pp-901A/S	Turbine Condensate	10,080	28,224
GZ-911	Turbo Generator	6,116,113	9,174,169
	Total ($ MM)	**6.13**	**9.20**
	Cooling Water		
GT-912	Cooling Tower System	2,563,103	3,075,724
	Total ($ MM)	**2.56**	**3.08**
PK-951	**Chilled Water Package**	**1.02**	**1.23**
	Plant and Fermentation Air		
MS-906	Plant Air Receiver	19,945	55,845
MS-907	Instrument Air Receiver	19,945	55,845
GY-910	Instrument Air Dryer	24,412	34,177
PC-911	Air Compressor	55,258	71,835
PK-950A/B/S	Air Compressor Package(fermentation)	4,257,231	5,108,677
	Total ($ MM)	**4.38**	**5.33**
	CIP/CS		
T-961	Cleaning Tank	24,434	56,199
T-960	Sterilization Tank	40,458	60,686
T-963	Sterile Rinse Water Tank	24,434	56,199
pp-960A/S	Supply	4,660	9,321
pp-965A/B/C/S	CIP/CS Sump	4,831	13,528
GA-960	Sterilization Tank Agitator	12,417	14,900
GA-961	Cleanig Tank Agitator	12,417	14,900
Tank T-953	Sterile Water	40,458	60,686
pp-953	Sterile Water	1,950	3,900
TT-953	Water Sterilizer	3,410	7,162
	Total ($ MM)	**0.17**	**0.30**
	TOTAL ($ MM)	34.75	46.18
TOTAL		65.851681	94.18

26.60
9.20
35.80

0.45
3.08
1.23
5.33
0.30
10.39

0.45
3.08
1.23
5.33
0.30
10.39

DATE 08-Dec-94

EQUIPMENT COST BY SECTION

PLANT AREA	Chem Systems BASE EQUIPMENT COST ($ MM)	INSTALLED EQUIPMENT COST ($ MM)
ISBL		
100 WOOD HANDLING	2.48	3.20
200 PREHYDROLYSIS	5.19	7.75
300 XYLOSE FERMENTATION	2.28	3.19
400 CELLULASE PRODUCTION	1.03	1.50
500 SSF	11.37	17.68
600 ETHANOL RECOVERY	2.93	6.49
Total	**25.27**	**39.80**
OSBL		
700 OFF-SITE TANKAGE	1.39	2.12
800 WASTE TREATMENT	4.44	6.09
900 UTILITIES		
Boiler Feed Water and Boiler Package	20.28	26.60
Process Water	0.21	0.45
Turbogenerator	6.13	9.20
Cooling Water	2.56	3.08
Chilled Water Package	1.02	1.23
Plant and Fermentation Air	4.38	5.33
CIP/CS	0.17	0.30
BUILDINGS		1.59
SITE DEVELOPMENT		3.58
ADDITIONAL PIPING		1.79
Total	**40.58**	**61.35**
Total Equipment Cost	**65.85**	**101.15**
Proratable Costs		10.11
Field Expenses		10.11
Home Office Construction and Fee		25.29
Contingency		3.03
Total Fixed Capital Investment		**149.70**
Owner's Cost		14.97
Total Capital Investment		**164.67**

164.67
.05
823.35

164.67
8.23
172.90

26.60
9.20
35.80

61.35
35.80
25.55

25.55
2.12
23.43
6.09
23.34

Table A.VI.2
Physical Property Data, Liquids

Component	Formula	MW	Density @298K kg/m³	Cp @298K J/(kg·K)	Boiling Pt. °C	Heat of Vaporiz. J/kmol	Heat of Formation J/kmol	Gibbs Energy J/kmol	Source
Acetaldehyde	C2H4O	44.053	774	2556	20.8	2.57E+07	-1.66E+08	-1.29E+08	13
Ethanol	C2H5OH	46.069	787	2432	78.3	3.88E+07	-2.34E+08	-1.68E+08	13
Furfural	C5H4O2	96.086	1155	1698	161.7		-1.51E+08	-1.03E+08	13
Fusel Oils[1]	C5H12O	88.15	812	2388	131.2	4.41E+07	-3.02E+08	-1.45E+08	13
Glycerol	C3H8O3	92.095	1257	2376	290	6.11E+07	-5.83E+08	-4.49E+08	13
HMF	C6H6O3	126.1	1206		114.85	5.18E+07	-3.64E+08	-2.38E+08	12, 13[2]
Water	H2O	18.013	994	4187	100	4.07E+07	-2.42E+08	-2.29E+08	13

Notes:
(1) Fusel Oils are considered to be 100% isoamyl alcohol (3-methyl-1-butanol).
(2) Some data calculcated from UNIFAC contribution method.

Biomass to Ethanol Process Evaluation

Appendix

A report prepared for
National Renewable Energy Laboratory
December 1994

CHEM SYSTEMS

Chem Systems Inc.
303 South Broadway
Tarrytown, New York 10591
Telephone: (914) 631-2828 Telex: 221844 Facsimile (914) 631-8851

APPENDICES

APPENDIX I
MATERIAL BALANCE

Job Name: ALL-BAS

Date: 07-07-94 Time: 14:10

FLOWSHEET SUMMARY

Equipment	Label	Stream Numbers
1 PUMP	PP-201	212 -2101
2 MIXE	GA-201	211 2101 -2102
3 MIXE	MR-201	101 2102 213 -2103
4 CONT	100°C	2103 -102
5 MIXE		102 214 -2104
6 EREA	MR-202	2104 -215
7 CONT	160°C	215 -2105
8 CONT	H2SO4	2105 -2106
9 FLAS	T-203	2106 -2107 -2108
10 CSEP	T-203	2107 -216 -2109
11 MIXE	(T-203)	2109 2108 217 -2110
12 PUMP	PP-202	2110 -218
13 MIXE	(T-206)	218 221 -2201
14 EREA	T-206	2201 -2202
15 CONT	LIME	2202 -2203
16 FLAS	(T-206)	2203 -2204 -222
17 PUMP	PP-203	222 -2205
18 HTXR	TT-220	2205 -2206
19 DIVI		2206 -223 -224
20 HTXR	TT-301A	3101 -3102
21 DIVI		223 -302 -301
22 MIXE		3104 3103 3102 3121 302 -3105
23 PUMP	GA-305/10	3105 -3106
24 CONT	WORK	3106 -3116
25 EREA	FM-305/10	3116 -3107
26 HTXR	COILS	3122 -3108
27 FLAS		3108 -3109 -3110
28 CSEP		3110 -3111 -3115
29 MIXE		3111 3109 -3112
30 CSEP		3112 -3113 -3114
31 MIXE		3114 3115 -303
32 MIXE		305 303 301 -304
33 PUMP	GA-303	304 -3117
34 CONT	WORK	3117 -3118
35 EREA	FM-303	3118 -3119
36 HTXR	COILS	3123 -3120
37 FLAS	(FM-303)	3120 -307 -306
38 PUMP	PP-303	306 -308
39 DIVI		224 -412 -411
40 HTXR	TT-401A	4101 -4102
41 HTXR	TT-401B	4102 -4103
42 MIXE		4105 4134 4104 4103 412 -4106
43 PUMP	GA-401/4	4106 -4107
44 CONT	work	4107 -4108
45 EREA	FM-401/4	4108 -4109
46 HTXR	COILS	4135 -4110

47	FLAS		4110 -4111 -4112
48	CSEP		4112 -4114 -4115
49	MIXE		4114 4111 -4116
50	CSEP		4116 -4113 -4117
51	MIXE		4117 4115 -413
52	HTXR	TT-402A	4118 -4119
53	HTXR	TT-402B	4119 -414
54	MIXE		413 411 415 416 418 414 -4120
55	PUMP	GA-400	4120 -4121
56	CONT	WORK	4121 -4122
57	EREA	FM-400	4122 -4123
58	EREA	FM-400	4123 -4124
59	CONT	NH3	4124 -4125
60	HTXR	COILS	4125 -4126
61	FLAS		4126 -4127 -4128
62	CSEP		4127 -4130 -4129
63	MIXE		4129 4128 -4131
64	CSEP		4131 -4132 -4133
65	MIXE		4132 4130 -419
66	PUMP	PP-412	4133 -420
67	DIVI		420 -5101 -5102
68	DIVI		308 -5103 -5104
69	MIXE		5101 5103 -501
70	MIXE		5107 5106 5105 5133 501 -5108
71	PUMP	GA-501/6	5108 -5109
72	CONT	WORK	5109 -5110
73	EREA	FM-501/6	5110 -5111
74	CONT	NH3	5111 -5112
75	HTXR	COILS	5112 -5113
76	FLAS		5113 -5114 -5115
77	CSEP		5115 -5116 -5117
78	MIXE		5116 5114 -5119
79	CSEP		5119 -5118 -5120
80	MIXE		5120 5117 -502
81	MIXE		502 5104 5102 -503
82	PUMP	GA-500	503 -5121
83	CONT	WORK	5121 -5122
84	EREA	FM-500	5135 -5123
85	EREA	FM-500	5123 -5124
86	HTXR	COILS	5136 -5125
87	FLAS		5125 -5126 -5127
88	CSEP		5126 -5131 -5128
89	MIXE		5128 5127 -5129
90	CSEP		5129 -5130 -5132
91	MIXE		5130 5131 -508
92	PUMP	PP-505	5132 -510
93	HTXR	TT-615	510 216 -6102 -6101
94	HTXR	TT-613	6102 -6103
95	FLAS	T-601	6103 -6104 -6105
96	CSEP		6105 -6110 -6107
97	HTXR	(REBOILER)	6107 -6108
98	MIXE		307 5118 508 6104 -6109
99	CSEP		6110 -6302 -6106
100	MIXE		6208 6304 -6305
101	MIXE		6108 611 -6301
102	CSEP	GC-609	6301 -6303 -6308
103	CONT	LIGNIN CONC	6308 -631

104	PUMP PP-631	6303 -6304
105	MIXE	632 634 6306 -6307
108	DIVI	6305 -211 -217 -3101 -4101 -4118 -633
109	PUMP PP-801	6101 -8101
110	MIXE T-803	8102 8101 633 -8103
111	PUMP PP-808	8103 -8104
112	HTXR TT-802	8104 -8105
113	EREA T-804	8105 -8106
114	EREA T-804	8106 -8107
115	FLAS (T-804)	8108 -8110 -8109
116	PUMP PP-809	8109 -812
117	MIXE GV-807	8201 812 -8203
118	EREA T-807	8203 -8204
119	FLAS	8205 -8206 -8207
120	CSEP GV-808	8207 -8208 -821
121	PUMP PP-816	8208 -822
122	CONT NH3	3107 -3122
123	CONT NH3	3119 -3123
124	CONT NH3	4109 -4135
125	CONT NH3	8107 -8108
126	MIXE	5122 5134 -5135
127	CONT NH3	5124 -5136
128	COMP PB-810	8110 -813
130	CONT oxygen	8204 -8205

Stream Connections

Stream	Equipment From	Equipment To	Stream	Equipment From	Equipment To	Stream	Equipment From	Equipment To
101		3	3104		22	5110	72	73
102	4	5	3105	22	23	5111	73	74
211	108	2	3106	23	24	5112	74	75
212		1	3107	25	122	5113	75	76
213		3	3108	26	27	5114	76	78
214		5	3109	27	29	5115	76	77
215	6	7	3110	27	28	5116	77	78
216	10	93	3111	28	29	5117	77	80
217	108	11	3112	29	30	5118	79	98
218	12	13	3113	30		5119	78	79
221		13	3114	30	31	5120	79	80
222	16	17	3115	28	31	5121	82	83
223	19	21	3116	24	25	5122	83	126
224	19	39	3117	33	34	5123	84	85
301	21	32	3118	34	35	5124	85	127
302	21	22	3119	35	123	5125	86	87
303	31	32	3120	36	37	5126	87	88
304	32	33	3121		22	5127	87	89
305		32	3122	122	26	5128	88	89
306	37	38	3123	123	36	5129	89	90
307	37	98	4101	108	40	5130	90	91
308	38	68	4102	40	41	5131	88	91
411	39	54	4103	41	42	5132	90	92
412	39	42	4104		42	5133		70
413	51	54	4105		42	5134		126
414	53	54	4106	42	43	5135	126	84
415		54	4107	43	44	5136	127	86

416		54	4108	44	45	6101	93	109
418		54	4109	45	124	6102	93	94
419	65		4110	46	47	6103	94	95
420	66	67	4111	47	49	6104	95	98
501	69	70	4112	47	48	6105	95	96
502	80	81	4113	50		6106	99	
503	81	82	4114	48	49	6107	96	97
508	91	98	4115	48	51	6108	97	101
510	92	93	4116	49	50	6109	98	
611		101	4117	50	51	6110	96	99
631	103		4118	108	52	6208		100
632		105	4119	52	53	6301	101	102
633	108	110	4120	54	55	6302	99	
634		105	4121	55	56	6303	102	104
812	116	117	4122	56	57	6304	104	100
813	128		4123	57	58	6305	100	108
821	120		4124	58	59	6306		105
822	121		4125	59	60	6307	105	
2101	1	2	4126	60	61	6308	102	103
2102	2	3	4127	61	62	8101	109	110
2103	3	4	4128	61	63	8102		110
2104	5	6	4129	62	63	8103	110	111
2105	7	8	4130	62	65	8104	111	112
2106	8	9	4131	63	64	8105	112	113
2107	9	10	4132	64	65	8106	113	114
2108	9	11	4133	64	66	8107	114	125
2109	10	11	4134		42	8108	125	115
2110	11	12	4135	124	46	8109	115	116
2201	13	14	5101	67	69	8110	115	128
2202	14	15	5102	67	81	8201		117
2203	15	16	5103	68	69	8203	117	118
2204	16		5104	68	81	8204	118	130
2205	17	18	5105		70	8205	130	119
2206	18	19	5106		70	8206	119	
3101	108	20	5107		70	8207	119	120
3102	20	22	5108	70	71	8208	120	121
3103		22	5109	71	72			

Equipment Calculation Sequence

1	105	2	3	4	5	6	7	8	9	10	11	12	13	14	15	16	17
18	19	39	21	22	23	24	25	122	26	27	28	29	30	31	32	33	34
35	123	36	37	38	68	42	43	44	45	124	46	47	48	49	50	51	54
55	56	57	58	59	60	61	62	63	64	66	67	69	70	71	72	73	74
75	76	77	78	79	80	81	82	83	126	84	85	127	86	87	88	89	90
92	93	94	95	96	97	101	102	104	100	108	40	20	52	53	41	65	91
98	99	103	109	110	111	112	113	114	125	115	116	117	118	128	130	119	120
121																	

Equipment Recycle Sequence

2	3	4	5	6	7	8	9	10	11	12	13	14	15	16	17	18	19
39	21	22	23	24	25	122	26	27	28	29	30	31	32	33	34	35	123
36	37	38	68	42	43	44	45	124	46	47	48	49	50	51	54	55	56
57	58	59	60	61	62	63	64	66	67	69	70	71	72	73	74	75	76
77	78	79	80	81	82	83	126	84	85	127	86	87	88	89	90	92	93
94	95	96	97	101	102	104	100	108	40	20	52	53	41				

Recycle Cut Streams
211 217 3102 4103 414

Recycle Convergence Method: Direct Substitution

Max. loop iterations 40

Recycle Convergence Tolerance

Flow rate	1.000E-003
Temperature	1.000E-003
Pressure	1.000E-003
Enthalpy	1.000E-003
Vapor frac.	1.000E-003

Recycle calculation has converged.

COMPONENTS

	ID #	Name	
1	62	Water	
2	8003	Cellulose	* solid *
3	8004	Xylan	
4	8008	Arabinan	
5	8009	Mannan	
6	8010	Galacatan	
7	776	Alpha-D-Glucose	* solid *
8	8001	Xylose	
9	8005	Arabinose	
10	8006	Mannose	
11	8007	Galactose	
12	134	Ethanol	
13	8002	HMF	
14	164	Furfural	
15	931	Calcium Sulfate	* solid *
16	268	Glycerol	
17	8011	Lignin	* solid *
18	8016	Soluble Solids	
19	8013	Ash	
20	8014	Cell Mass	
21	431	Sulfuric Acid	
22	929	CalciumHydroxide	* solid *
23	8015	Cellulase	
24	475	Air	
25	46	Nitrogen	
26	47	Oxygen	
27	49	Carbon Dioxide	
28	128	Acetaldehyde	
29	315	3-Mth-1-Butanol	
30	2	Methane	
31	63	Ammonia	

THERMODYNAMICS

K-value model : NRTL
No corrrection for vapor fugacity
Enthalpy model : Mixed Model
Liquid density : Library

NRTL Parameters:

I	J	Bij	Bji	Alpha
1	12	670.441	-55.168	0.303
1	13	2499.992	736.815	0.200
1	14	1584.604	-204.266	0.202
1	16	258.114	-274.349	1.011
1	21	-1228.663	-1894.248	0.243
1	28	662.993	-23.571	0.287
1	29	1828.452	-249.014	0.282
12	14	510.442	328.316	0.777
12	16	398.444	79.505	0.296
12	28	195.116	-553.744	0.409
12	29	25.750	-21.569	0.301
13	14	41.636	2499.960	0.312
13	16	1348.007	2499.989	0.200
14	16	1411.930	-16.983	0.350
30	31	-0.131	237.017	0.000

Warning : BIP matrix is less than 50 % full.

1 - Water
12 - EtOH
13 - HMF
14 - Furfural
16 - Glycerol
21 - H_2SO_4
28 - Acetaldehyde
29 - 3-Meth-1 Butanol
30 - methane
31 - Ammonia

Overall Mass Balance	kmol/h		kg/h	
	Input	Output	Input	Output
Water	30957.424	30772.947	557697.976	554374.616
Cellulose	206.755	23.613	33523.877	3828.750
Xylan	99.136	1.328	13097.531	175.467
Arabinan	7.415	0.099	979.594	13.124
Mannan	15.932	0.576	2583.225	93.416
Galacatan	4.654	0.168	754.650	27.290
Alpha-D-Glucose	2.553	0.000	460.000	0.000
Xylose	0.000	0.613	0.008	91.987
Arabinose	0.000	0.046	0.001	6.853
Mannose	0.000	0.000	0.000	0.000
Galactose	0.000	0.000	0.000	0.000
Ethanol	0.239	470.738	11.000	21686.409
HMF	0.000	0.020	0.000	2.563
Furfural	24.426	25.956	2347.002	2494.013
Calcium Sulfate	0.000	11.776	0.001	1603.148
Glycerol	106.054	109.658	9767.040	10098.912
Lignin	142.396	142.412	17415.002	17417.037
Soluble Solids	2.456	2.425	4063.501	4011.751
Ash	1.187	1.187	145.125	145.142
Cell Mass	0.008	1.143	17.804	2643.384
Sulfuric Acid	11.774	0.000	1154.799	0.000
CalciumHydroxide	11.818	0.044	875.634	3.249
Cellulase	0.000	0.000	0.002	0.026
Air	2114.594	1842.167	61219.612	53332.573
Nitrogen	0.000	216.654	0.000	6069.338
Oxygen	23.438	49.433	750.000	1581.820
Carbon Dioxide	0.000	596.674	0.000	26259.615
Acetaldehyde	0.000	0.860	0.000	37.874
3-Mth-1-Butanol	0.000	0.172	0.000	15.157
Methane	0.000	88.756	0.000	1423.905
Ammonia	38.765	0.335	660.203	5.712
Total	33771.026	34359.806	707523.641	707443.129

EQUIPMENT SUMMARIES

Pump Summary

Equip. No.	1	12	17	23
Name	PP-201	PP-202	PP-203	GA-305/10
Output pressure Pa		207000.0000		
Pressure increase Pa	965000.0000		414000.0000	218.5615
Efficiency	0.7500	0.7500	0.7500	1.0000e-004
Calculated power kW	0.2250	16.6910	69.7433	61.8021

Equip. No.	33	38	43	55
Name	GA-303	PP-303	GA-401/4	GA-400
Pressure increase Pa	83.9075	345000.0000	1798.3339	1652.2672
Efficiency	1.0000e-004	0.7500	1.0000e-004	1.0000e-004
Calculated power kW	105.7098	58.0723	8.6300	528.0167

Equip. No.	66	71	82	92
Name	PP-412	GA-501/6	GA-500	PP-505
Pressure increase Pa	412000.0000	1069.5040	1115.3357	412000.0000
Efficiency	0.7500	1.0000e-004	1.0000e-004	0.7500
Calculated power kW	3.6010	417.0361	1485.2222	72.3874

Equip. No.	104	109	111	116
Name	PP-631	PP-801	PP-808	PP-809
Output pressure Pa	452000.0000			
Pressure increase Pa		100000.0000	303000.0000	303000.0000
Efficiency	0.8500	0.8500	0.8500	0.8500
Calculated power kW	49.3492	0.6155	12.9385	12.0557

Equip. No.	121
Name	PP-816
Output pressure Pa	452000.0000
Efficiency	0.8500
Calculated power kW	13.8096

Mixer Summary

Equip. No.	2	3	5	11
Name	GA-201	MR-201		(T-203)
Output Pressure Pa	532000.0000	446062.0312	1.1355e+006	108000.0000

Equip. No.	13	22	29	31
Name	(T-206)			
Output Pressure Pa	108000.0000	108000.0000	108000.0000	108000.0000

Equip. No.	32	42	49	51
Name				
Output Pressure Pa	108000.0000	432000.0000	108000.0000	108000.0000

Equip. No.	54	63	65	69
Name				
Output Pressure Pa	108000.0000	108000.0000	108000.0000	108000.0000

Equip. No.	70	78	80	81

EQUIPMENT SUMMARIES

	Name					
Output	Pressure	Pa	108000.0000	108000.0000	108000.0000	108000.0000
Equip.	No.		89	91	98	100
	Name					
Output	Pressure	Pa	108000.0000	108000.0000	108000.0000	452000.0000
Equip.	No.		101	105	110	117
	Name				T-803	GV-807
Output	Pressure	Pa	108000.0000		108000.0000	102000.0000
Equip.	No.		126			
	Name					

Controller Summary

Equip. No.	4	7	8	15
Name	100°C	160°C	H2SO4	LIME
Mode:	2	2	2	2
Stream no. adjusted	213	214	212	221
Variable No.	6	6	6	6
Beginning	0	0	0	0
Measured variables:				
Number	2103	215	215	2202
Variable	1	1	-21	-21
Operator	0	0	4	1
Number	0	0	215	2202
Variable	0	0	-1	-22
Constant	100.0000	160.0000	0.0016	0.1000
Units	2	2	0	0
Equip. No.	24	34	44	56
Name	WORK	WORK	work	WORK
Mode:	2	2	2	2
Equip. no. adjusted	23	33	43	55
Variable No.	3	3	3	3
Beginning	0	0	0	0
Measured variables:				
Type:	1	1	1	1
Number	23	33	43	55
Variable	5	5	5	5
Constant	61.8000	105.7000	8.6300	528.0000
Units	7	7	7	7
Equip. No.	59	72	74	83
Name	NH3	WORK	NH3	WORK
Mode:	2	2	2	2
Equip. no. adjusted	0	71	0	82
Stream no. adjusted	416	0	5133	0
Variable No.	6	3	6	3
Beginning	0	0	0	0

EQUIPMENT SUMMARIES

Measured variables:

Type:	0	1	0	1
Number	4124	71	5111	82
Variable	-31	5	-31	5
Constant	0.0100	417.0000	0.0100	1485.0000
Units	0	7	0	7

Equip. No.	103	122	123	124
Name	LIGNIN CONC	NH3	NH3	NH3
Mode:	2	2	2	2
Equip. no. adjusted	102	0	0	0
Stream no. adjusted	0	3121	305	4134
Variable No.	10	6	6	6
Beginning	0	0	0	0

Measured variables:

Number	6308	3107	3119	4109
Variable	-17	-31	-31	-31
Scale	122.3000			
Operator	4	0	0	0
Number	6308	0	0	0
Variable	6	0	0	0
Constant	0.4000	0.0100	0.0100	0.0100

Equip. No.	125	127	130
Name	NH3	NH3	oxygen
Mode:	2	2	0
Stream no. adjusted	8102	5134	8201
Variable No.	6	6	6
Beginning	0	0	0

Measured variables:

Number	8107	5124	8204
Variable	-31	-31	-26
Operator	0	0	4
Number	0	0	8203
Variable	0	0	-26
Constant	0.0100	0.0100	0.5000

Equilibrium Reactor Summary

Equip. No.	6	14	25	35
Name	MR-202	T-206	FM-305/10	FM-303
No of Reactions	10	1	5	5
Specify thermal mode:	1	1	1	1
C	159.9985	101.9518	49.9741	57.2015
Temperature Units:	3	3	3	3
Pressure Units:	7	7	7	7
Heat of Reaction Units:	4	3	4	4
Molar Flow Units:	1	1	1	1
Reference Temp C	15.0000			15.0000
Calc Overall Ht of Rxn (kW)	-1937.7831	-1869.8578	-1756.6875	-13439.2695

EQUIPMENT SUMMARIES

Reaction Stoichiometrics and Parameters for unit no. 6

Reaction no.	1	2	3	4
Base component	2	5	6	2
Frac.conversion	0.0300	0.8000	0.8000	0.0010
	2	5	6	2
	-1.0000	-1.0000	-1.0000	-1.0000
	1.0000	1.0000	1.0000	1.0000
	1	1	1	13
	-1.0000	-1.0000	-1.0000	1.0000
	1.0000	1.0000	1.0000	1.0000
	7	10	11	1
	1.0000	1.0000	1.0000	2.0000
	1.0000	1.0000	1.0000	1.0000
Reaction no.	5	6	7	8
Base component	5	6	3	4
Frac.conversion	0.0010	0.0010	0.8000	0.8000
	5	6	3	4
	-1.0000	-1.0000	-1.0000	-1.0000
	1.0000	1.0000	1.0000	1.0000
	13	13	1	1
	1.0000	1.0000	-1.0000	-1.0000
	1.0000	1.0000	1.0000	1.0000
	1	1	8	9
	2.0000	2.0000	1.0000	1.0000
	1.0000	1.0000	1.0000	1.0000
Reaction no.	9	10		
Base component	3	4		
Frac.conversion	0.1300	0.1300		
	3	4		
	-1.0000	-1.0000		
	1.0000	1.0000		
	14	14		
	1.0000	1.0000		
	1.0000	1.0000		
	1	1		
	2.0000	2.0000		
	1.0000	1.0000		

Reaction Stoichiometrics and Parameters for unit no. 14

Reaction no.	1
Base component	21
Frac.conversion	1.0000
	21
	-1.0000
	1.0000
	22
	-1.0000
	1.0000
	1
	2.0000
	1.0000
	15

EQUIPMENT SUMMARIES

1.0000
1.0000

Reaction Stoichiometrics and Parameters for unit no. 25

Reaction no.	1	2	3	4
Base component	7	10	11	8
Heat of reaction	-1.0800e+006	-1.0800e+006	-1.0800e+006	-1.0600e+006
Frac.conversion	1.0000	1.0000	1.0000	1.0000
	7	10	11	8
	-100.0000	-100.0000	-100.0000	-100.0000
	1.0000	1.0000	1.0000	1.0000
	24	24	24	24
	-919.0000	-919.0000	-919.0000	-771.0000
	1.0000	1.0000	1.0000	1.0000
	31	31	31	31
	-89.7000	-89.7000	-89.7000	-74.7000
	1.0000	1.0000	1.0000	1.0000
	20	20	20	20
	3.9000	3.9000	3.9000	3.2500
	1.0000	1.0000	1.0000	1.0000
	27	27	27	27
	210.0000	210.0000	210.0000	175.0000
	1.0000	1.0000	1.0000	1.0000
	1	1	1	1
	415.0000	415.0000	415.0000	346.0000
	1.0000	1.0000	1.0000	1.0000
	25	25	25	25
	726.0000	726.0000	726.0000	609.0000
	1.0000	1.0000	1.0000	1.0000

Reaction no.	5
Base component	9
Heat of reaction	-1.0600e+006
Frac.conversion	1.0000
	9
	-100.0000
	1.0000
	24
	-771.0000
	1.0000
	31
	-74.7000
	1.0000
	20
	3.2500
	1.0000
	27
	175.0000
	1.0000
	1
	346.0000
	1.0000
	25
	609.0000
	1.0000

EQUIPMENT SUMMARIES

Reaction Stoichiometrics and Parameters for unit no. 35

Reaction no.	1	2	3	4
Base component	7	10	11	8
Heat of reaction				-620000.0000
Frac.conversion	0.8550	0.8550	0.8550	0.8550
	7	10	11	8
	-1.0000	-1.0000	-1.0000	-3.0000
	1.0000	1.0000	1.0000	1.0000
	12	12	12	12
	2.0000	2.0000	2.0000	5.0000
	1.0000	1.0000	1.0000	1.0000
	27	27	27	27
	2.0000	2.0000	2.0000	5.0000
	1.0000	1.0000	1.0000	1.0000
Reaction no.	5			
Base component	9			
Heat of reaction	-620000.0000			
Frac.conversion	0.8550			
	9			
	-3.0000			
	1.0000			
	12			
	5.0000			
	1.0000			
	27			
	5.0000			
	1.0000			

Equip. No.	45	57	58	73
Name	FM-401/4	FM-400	FM-400	FM-501/6
No of Reactions	8	8	8	6
Specify thermal mode:	1	1	1	1
C	67.0654	37.9038	59.1862	47.6848
Temperature Units:	3	3	3	3
Pressure Units:	6	7	7	7
Heat of Reaction Units:	3	3	3	3
Molar Flow Units:	1	1	1	1
Reference Temp C	15.0000	15.0000	15.0000	15.0000
Calc Overall Ht of Rxn (kW)	-11.2205	-453.9841	-2228.8594	-1265.0203

Reaction Stoichiometrics and Parameters for unit no. 45

Reaction no.	1	2	3	4
Base component	7	10	11	8
Heat of reaction				-1.0600e+006
Frac.conversion	1.0000	1.0000	1.0000	1.0000
	7	10	11	8
	-100.0000	-100.0000	-100.0000	-100.0000
	1.0000	1.0000	1.0000	1.0000
	24	24	24	24
	-919.0000	-919.0000	-919.0000	-771.0000

EQUIPMENT SUMMARIES

	1.0000	1.0000	1.0000	1.0000
	31	31	31	31
	-89.7000	-89.7000	-89.7000	-74.7000
	1.0000	1.0000	1.0000	1.0000
	20	20	20	20
	3.9000	3.9000	3.9000	3.2500
	1.0000	1.0000	1.0000	1.0000
	27	27	27	27
	210.0000	210.0000	210.0000	175.0000
	1.0000	1.0000	1.0000	1.0000
	1	1	1	1
	415.0000	415.0000	415.0000	346.0000
	1.0000	1.0000	1.0000	1.0000
	25	25	25	25
	726.0000	726.0000	726.0000	609.0000
	1.0000	1.0000	1.0000	1.0000
Reaction no.	5	6	7	8
Base component	9	2	5	6
Heat of reaction	-1.0600e+006			
Frac.conversion	1.0000	1.0000	1.0000	1.0000
	9	2	5	6
	-100.0000	-100.0000	-100.0000	-100.0000
	1.0000	1.0000	1.0000	1.0000
	24	24	24	24
	-771.0000	-1114.0000	-1114.0000	-1114.0000
	1.0000	1.0000	1.0000	1.0000
	31	31	31	31
	-74.7000	-80.6000	-80.6000	-80.6000
	1.0000	1.0000	1.0000	1.0000
	20	20	20	20
	3.2500	3.5100	3.5100	3.5100
	1.0000	1.0000	1.0000	1.0000
	27	27	27	27
	175.0000	249.0000	249.0000	249.0000
	1.0000	1.0000	1.0000	1.0000
	1	1	1	1
	346.0000	333.0000	333.0000	333.0000
	1.0000	1.0000	1.0000	1.0000
	25	25	25	25
	609.0000	880.0000	880.0000	880.0000
	1.0000	1.0000	1.0000	1.0000

Reaction Stoichiometrics and Parameters for unit no. 57

Reaction no.	1	2	3	4
Base component	7	10	11	8
Heat of reaction				-1.0800e+006
Frac.conversion	0.3250	0.3250	0.3250	0.3250
	7	10	11	8
	-100.0000	-100.0000	-100.0000	-100.0000
	1.0000	1.0000	1.0000	1.0000
	24	24	24	24
	-919.0000	-919.0000	-919.0000	-771.0000
	1.0000	1.0000	1.0000	1.0000
	31	31	31	31

EQUIPMENT SUMMARIES

	-89.7000	-89.7000	-89.7000	-74.7000
	1.0000	1.0000	1.0000	1.0000
	20	20	20	20
	3.9000	3.9000	3.9000	3.2500
	1.0000	1.0000	1.0000	1.0000
	27	27	27	27
	210.0000	210.0000	210.0000	175.0000
	1.0000	1.0000	1.0000	1.0000
	1	1	1	1
	415.0000	415.0000	415.0000	346.0000
	1.0000	1.0000	1.0000	1.0000
	25	25	25	25
	726.0000	726.0000	726.0000	609.0000
	1.0000	1.0000	1.0000	1.0000
Reaction no.	5	6	7	8
Base component	9	2	5	6
Heat of reaction	-1.0800e+006			
Frac.conversion	0.3250	0.3250	0.3250	0.3250
	9	2	5	6
	-100.0000	-100.0000	-100.0000	-100.0000
	1.0000	1.0000	1.0000	1.0000
	24	24	24	24
	-771.0000	-1114.0000	-1114.0000	-1114.0000
	1.0000	1.0000	1.0000	1.0000
	31	31	31	31
	-74.7000	-80.6000	-80.6000	-80.6000
	1.0000	1.0000	1.0000	1.0000
	20	20	20	20
	3.2500	3.5100	3.5100	3.5100
	1.0000	1.0000	1.0000	1.0000
	27	27	27	27
	175.0000	249.0000	249.0000	249.0000
	1.0000	1.0000	1.0000	1.0000
	1	1	1	1
	346.0000	333.0000	333.0000	333.0000
	1.0000	1.0000	1.0000	1.0000
	25	25	25	25
	609.0000	880.0000	880.0000	880.0000
	1.0000	1.0000	1.0000	1.0000

Reaction Stoichiometrics and Parameters for unit no. 58

Reaction no.	1	2	3	4
Base component	2	5	6	7
Frac.conversion	1.0000	1.0000	1.0000	1.0000
	2	5	6	7
	-100.0000	-100.0000	-100.0000	-100.0000
	1.0000	1.0000	1.0000	1.0000
	24	24	24	24
	-1895.0000	-1895.0000	-1895.0000	-1895.0000
	1.0000	1.0000	1.0000	1.0000
	31	31	31	31
	-57.4000	-57.4000	-57.4000	-57.4000
	1.0000	1.0000	1.0000	1.0000
	23	23	23	23

EQUIPMENT SUMMARIES

	1.9800	1.9800	1.9800	1.9800
	1.0000	1.0000	1.0000	1.0000
	27	27	27	27
	402.0000	402.0000	402.0000	402.0000
	1.0000	1.0000	1.0000	1.0000
	1	1	1	1
	431.0000	431.0000	431.0000	531.0000
	1.0000	1.0000	1.0000	1.0000
	25	25	25	25
	1497.0000	1497.0000	1497.0000	1497.0000
	1.0000	1.0000	1.0000	1.0000
Reaction no.	5	6	7	8
Base component	10	11	8	9
Heat of reaction			-1.5600e+006	-1.5600e+006
Frac.conversion	1.0000	1.0000	1.0000	1.0000
	10	11	8	9
	-100.0000	-100.0000	-100.0000	-100.0000
	1.0000	1.0000	1.0000	1.0000
	24	24	24	24
	-1895.0000	-1895.0000	-1490.0000	-1490.0000
	1.0000	1.0000	1.0000	1.0000
	31	31	31	31
	-57.4000	-57.4000	-53.1000	-53.1000
	1.0000	1.0000	1.0000	1.0000
	23	23	23	23
	1.9800	1.9800	1.8300	1.8300
	1.0000	1.0000	1.0000	1.0000
	27	27	27	27
	402.0000	402.0000	317.0000	317.0000
	1.0000	1.0000	1.0000	1.0000
	1	1	1	1
	531.0000	531.0000	436.0000	436.0000
	1.0000	1.0000	1.0000	1.0000
	25	25	25	25
	1497.0000	1497.0000	1177.0000	1177.0000
	1.0000	1.0000	1.0000	1.0000

Reaction Stoichiometrics and Parameters for unit no. 73

Reaction no.	1	2	3	4
Base component	7	10	11	2
Frac.conversion	1.0000	1.0000	1.0000	0.1460
	7	10	11	2
	-100.0000	-100.0000	-100.0000	-100.0000
	1.0000	1.0000	1.0000	1.0000
	24	24	24	24
	-919.0000	-919.0000	-919.0000	-1114.0000
	1.0000	1.0000	1.0000	1.0000
	31	31	31	31
	-89.7000	-89.7000	-89.7000	-234.0000
	1.0000	1.0000	1.0000	1.0000
	20	20	20	20
	3.9000	3.9000	3.9000	3.5100
	1.0000	1.0000	1.0000	1.0000
	27	27	27	27

EQUIPMENT SUMMARIES

	210.0000	210.0000	210.0000	249.0000
	1.0000	1.0000	1.0000	1.0000
	1	1	1	1
	415.0000	415.0000	415.0000	333.0000
	1.0000	1.0000	1.0000	1.0000
	25	25	25	25
	726.0000	726.0000	726.0000	880.0000
	1.0000	1.0000	1.0000	1.0000
Reaction no.	5	6		
Base component	5	6		
Frac.conversion	0.1460	0.1460		
	5	6		
	-100.0000	-100.0000		
	1.0000	1.0000		
	24	24		
	-1114.0000	-1114.0000		
	1.0000	1.0000		
	31	31		
	-80.6000	-80.6000		
	1.0000	1.0000		
	20	20		
	3.5100	3.5100		
	1.0000	1.0000		
	27	27		
	249.0000	249.0000		
	1.0000	1.0000		
	1	1		
	333.0000	333.0000		
	1.0000	1.0000		
	25	25		
	880.0000	880.0000		
	1.0000	1.0000		

Equip. No.	84	85	113	114
Name	FM-500	FM-500	T-804	T-804
No of Reactions	5	12	18	1
Specify thermal mode:	1	1	2	2
C	43.3789	48.1183	35.0000	35.0000
kW			3785.8560	796.6229
Temperature Units:	3	3	3	3
Pressure Units:	7	7	7	7
Heat of Reaction Units:	3	3	4	4
Molar Flow Units:	1	1	1	1
Reference Temp C	15.0000	15.0000	15.0000	15.0000
Calc Overall Ht of Rxn (kW)	-3361.5591	2074.9775	2166.8982	918.8409

Reaction Stoichiometrics and Parameters for unit no. 84

Reaction no.	1	2	3	4
Base component	2	5	6	3
Frac.conversion	0.8700	0.8000	0.8000	0.8000
	2	5	6	3
	-1.0000	-1.0000	-1.0000	-1.0000
	1.0000	1.0000	1.0000	1.0000

EQUIPMENT SUMMARIES

	1	1	1	1
	-1.0000	-1.0000	-1.0000	-1.0000
	1.0000	1.0000	1.0000	1.0000
	7	10	11	8
	1.0000	1.0000	1.0000	1.0000
	1.0000	1.0000	1.0000	1.0000
Reaction no.	5			
Base component	4			
Frac.conversion	0.8000			
	4			
	-1.0000			
	1.0000			
	1			
	-1.0000			
	1.0000			
	9			
	1.0000			
	1.0000			

Reaction Stoichiometrics and Parameters for unit no. 85

Reaction no.	1	2	3	4
Base component	7	10	11	7
Frac.conversion	0.9200	0.9200	0.9200	0.0050
	7	10	11	7
	-1.0000	-1.0000	-1.0000	-1.0000
	1.0000	1.0000	1.0000	1.0000
	12	12	12	16
	2.0000	2.0000	2.0000	1.0000
	1.0000	1.0000	1.0000	1.0000
	27	27	27	28
	2.0000	2.0000	2.0000	1.0000
	1.0000	1.0000	1.0000	1.0000
	0	0	0	27
				1.0000
				1.0000
Reaction no.	5	6	7	8
Base component	10	11	7	10
Frac.conversion	0.0050	0.0050	0.0010	0.0010
	10	11	7	10
	-1.0000	-1.0000	-1.0000	-1.0000
	1.0000	1.0000	1.0000	1.0000
	16	16	29	29
	1.0000	1.0000	1.0000	1.0000
	1.0000	1.0000	1.0000	1.0000
	28	28	27	27
	1.0000	1.0000	1.0000	1.0000
	1.0000	1.0000	1.0000	1.0000
	27	27	26	26
	1.0000	1.0000	1.5000	1.5000
	1.0000	1.0000	1.0000	1.0000
Reaction no.	9	10	11	12
Base component	11	7	10	11
Frac.conversion	0.0010	0.0740	0.0740	0.0740
	11	7	10	11

EQUIPMENT SUMMARIES

-1.0000	-100.0000	-100.0000	-100.0000
1.0000	1.0000	1.0000	1.0000
29	12	12	12
1.0000	-100.0000	-100.0000	-100.0000
1.0000	1.0000	1.0000	1.0000
27	31	31	31
1.0000	-46.0000	-46.0000	-46.0000
1.0000	1.0000	1.0000	1.0000
26	20	20	20
1.5000	2.0000	2.0000	2.0000
1.0000	1.0000	1.0000	1.0000
0	16	16	16
	200.0000	200.0000	200.0000
	1.0000	1.0000	1.0000
0	1	1	1
	5.0000	5.0000	5.0000
	1.0000	1.0000	1.0000
0	26	26	26
	8.5000	8.5000	8.5000
	1.0000	1.0000	1.0000

Reaction Stoichiometrics and Parameters for unit no. 113

Reaction no.	1	2	3	4
Base component	2	5	6	3
Frac.conversion	0.9000	0.9000	0.9000	0.9000
	2	5	6	3
	-1.0000	-1.0000	-1.0000	-2.0000
	1.0000	1.0000	1.0000	1.0000
	1	1	1	1
	-1.0000	-1.0000	-1.0000	-2.0000
	1.0000	1.0000	1.0000	1.0000
	27	27	27	27
	3.0000	3.0000	3.0000	5.0000
	1.0000	1.0000	1.0000	1.0000
	30	30	30	30
	3.0000	3.0000	3.0000	5.0000
	1.0000	1.0000	1.0000	1.0000
Reaction no.	5	6	7	8
Base component	4	7	10	11
Frac.conversion	0.9000	0.9000	0.9000	0.9000
	4	7	10	11
	-2.0000	-1.0000	-1.0000	-1.0000
	1.0000	1.0000	1.0000	1.0000
	1	27	27	27
	-2.0000	3.0000	3.0000	3.0000
	1.0000	1.0000	1.0000	1.0000
	27	30	30	30
	5.0000	3.0000	3.0000	3.0000
	1.0000	1.0000	1.0000	1.0000
	30	0	0	0
	5.0000			
	1.0000			
Reaction no.	9	10	11	12
Base component	8	9	12	13

EQUIPMENT SUMMARIES

Frac.conversion	0.9000	0.9000	0.9000	0.9000
	8	9	12	13
	-2.0000	-2.0000	-2.0000	-1.0000
	1.0000	1.0000	1.0000	1.0000
	27	27	27	1
	5.0000	5.0000	1.0000	-3.0000
	1.0000	1.0000	1.0000	1.0000
	30	30	30	27
	5.0000	5.0000	3.0000	3.0000
	1.0000	1.0000	1.0000	1.0000
	0	0	0	30
				3.0000
				1.0000
Reaction no.	13	14	15	16
Base component	14	16	28	29
Frac.conversion	0.9000	0.9000	0.9000	0.9000
	14	16	28	29
	-2.0000	-2.0000	-2.0000	-2.0000
	1.0000	1.0000	1.0000	1.0000
	1	1	1	1
	-6.0000	-2.0000	-2.0000	-6.0000
	1.0000	1.0000	1.0000	1.0000
	27	27	27	27
	5.0000	1.0000	1.0000	1.0000
	1.0000	1.0000	1.0000	1.0000
	30	30	30	30
	5.0000	5.0000	3.0000	9.0000
	1.0000	1.0000	1.0000	1.0000
	0	26	26	26
		3.0000	1.0000	3.0000
		1.0000	1.0000	1.0000
Reaction no.	17	18		
Base component	23	18		
Frac.conversion	0.9000	0.9000		
	23	18		
	-4.0000	-2.0000		
	1.0000	1.0000		
	1	1		
	-362.0000	-214.0000		
	1.0000	1.0000		
	27	27		
	61.0000	19.0000		
	1.0000	1.0000		
	30	30		
	338.0000	181.0000		
	1.0000	1.0000		
	25	26		
	58.0000	107.0000		
	1.0000	1.0000		
	26	0		
	181.0000			
	1.0000			

Reaction Stoichiometrics and Parameters for unit no. 114

EQUIPMENT SUMMARIES

Reaction no.	1
Base component	30
Frac.conversion	0.1630
	30
	-417.0000
	1.0000
	27
	-383.0000
	1.0000
	31
	-184.0000
	1.0000
	20
	8.0000
	1.0000
	1
	454.0000
	1.0000

Equip. No.	118
Name	T-807
No of Reactions	18
Specify thermal mode:	1
C	51.6439
Temperature Units:	2
Pressure Units:	7
Heat of Reaction Units:	4
Molar Flow Units:	1
Reference Temp C	15.0000
Calc Overall Ht of Rxn (kW)	-2334.3513

Reaction Stoichiometrics and Parameters for unit no. 118

Reaction no.	1	2	3	4
Base component	2	5	6	3
Frac.conversion	1.0000	1.0000	1.0000	1.0000
	2	5	6	3
	-1.0000	-1.0000	-1.0000	-1.0000
	1.0000	1.0000	1.0000	1.0000
	26	26	26	26
	-6.0000	-6.0000	-6.0000	-5.0000
	1.0000	1.0000	1.0000	1.0000
	27	27	27	27
	6.0000	6.0000	6.0000	5.0000
	1.0000	1.0000	1.0000	1.0000
	1	1	1	1
	5.0000	5.0000	5.0000	4.0000
	1.0000	1.0000	1.0000	1.0000
Reaction no.	5	6	7	8
Base component	4	7	10	11
Frac.conversion	1.0000	1.0000	1.0000	1.0000
	4	7	10	11
	-1.0000	-1.0000	-1.0000	-1.0000
	1.0000	1.0000	1.0000	1.0000

EQUIPMENT SUMMARIES

	26	26	26	26
	-5.0000	-6.0000	-6.0000	-6.0000
	1.0000	1.0000	1.0000	1.0000
	27	27	27	27
	5.0000	6.0000	6.0000	6.0000
	1.0000	1.0000	1.0000	1.0000
	1	1	1	1
	4.0000	6.0000	6.0000	6.0000
	1.0000	1.0000	1.0000	1.0000
Reaction no.	9	10	11	12
Base component	8	9	12	13
Frac.conversion	1.0000	1.0000	1.0000	1.0000
	8	9	12	13
	-1.0000	-1.0000	-1.0000	-1.0000
	1.0000	1.0000	1.0000	1.0000
	26	26	26	26
	-5.0000	-5.0000	-3.0000	-6.0000
	1.0000	1.0000	1.0000	1.0000
	27	27	27	27
	5.0000	5.0000	2.0000	6.0000
	1.0000	1.0000	1.0000	1.0000
	1	1	1	1
	5.0000	5.0000	3.0000	3.0000
	1.0000	1.0000	1.0000	1.0000
Reaction no.	13	14	15	16
Base component	14	16	18	28
Frac.conversion	1.0000	1.0000	1.0000	1.0000
	14	16	18	28
	-1.0000	-2.0000	-2.0000	-2.0000
	1.0000	1.0000	1.0000	1.0000
	26	26	26	26
	-5.0000	-7.0000	255.0000	-5.0000
	1.0000	1.0000	1.0000	1.0000
	27	27	27	27
	5.0000	6.0000	200.0000	4.0000
	1.0000	1.0000	1.0000	1.0000
	1	1	1	1
	2.0000	8.0000	148.0000	4.0000
	1.0000	1.0000	1.0000	1.0000
Reaction no.	17	18		
Base component	29	23		
Frac.conversion	1.0000	1.0000		
	29	23		
	-2.0000	-1.0000		
	1.0000	1.0000		
	26	26		
	15.0000	102.0000		
	1.0000	1.0000		
	27	27		
	10.0000	100.0000		
	1.0000	1.0000		
	1	1		
	12.0000	35.0000		
	1.0000	1.0000		
	0	31		
		29.0000		

EQUIPMENT SUMMARIES

1.0000

Flash Summary

Equip. No.	9	16	27	37
Name	T-203	(T-206)		(FM-303)
Flash Mode	5	5	2	5
Param 1	108000.0000	108000.0000	37.0000	108000.0000
Param 2			108000.0000	
Heat duty kW			1.0504	
K values:				
Water	1.015	1.006	0.058	0.060
Cellulose	1.000E-010	1.000E-010	1.000E-010	1.000E-010
Xylan	1.000E-020	1.000E-020	1.000E-020	1.000E-020
Arabinan	1.000E-020	1.000E-020	1.000E-020	1.000E-020
Mannan	1.000E-020	1.000E-020	1.000E-020	1.000E-020
Galacatan	1.000E-020	1.000E-020	1.000E-020	1.000E-020
Alpha-D-Glucose	1.000E-010	1.000E-010	1.000E-010	1.000E-010
Xylose	4.667E-003	4.511E-003	1.466E-003	1.441E-003
Arabinose	1.041E-011	9.609E-012	7.755E-018	8.958E-018
Mannose	3.109E-017	2.823E-017	1.000E-020	1.000E-020
Galactose	3.109E-017	2.823E-017	1.000E-020	1.000E-020
Ethanol	11.177	11.125	1.016	0.983
HMF	1032.006	1406.028	193.248	135.132
Furfural	4.291	4.560	0.424	0.422
Calcium Sulfate	1.000E-010	1.000E-010	1.000E-010	1.000E-010
Glycerol	1.288E-004	1.184E-004	2.266E-007	2.440E-007
Lignin	1.000E-010	1.000E-010	1.000E-010	1.000E-010
Soluble Solids	1.000E-020	1.000E-020	1.000E-020	1.000E-020
Ash	1.000E-020	1.000E-020	1.000E-020	1.000E-020
Cell Mass	4.670E-003	4.514E-003	1.467E-003	1.442E-003
Sulfuric Acid	2.422E-013	1.681E-013	1.512E-020	2.254E-020
CalciumHydroxid	1.000E-010	1.000E-010	1.000E-010	1.000E-010
Cellulase	4.670E-003	4.514E-003	1.467E-003	1.442E-003
Air	1.603E+005	1.557E+005	1.052E+005	1.030E+005
Nitrogen	1.603E+005	1.557E+005	1.052E+005	1.030E+005
Oxygen	1.019E+005	98854.180	52696.980	51679.941
Carbon Dioxide	21491.451	20664.934	2322.031	2304.274
Acetaldehyde	47.688	47.432	12.287	10.940
3-Mth-1-Butanol	13.447	15.369	1.061	0.856
Methane	64607.453	62759.059	45664.727	44690.477
Ammonia	61.809	59.663	13.062	12.905

Equip. No.	47	61	76	87
Name				
Flash Mode	2	2	0	0
Param 1	28.0000	28.0000	37.0000	37.0000
Param 2	108000.0000	108000.0000	108000.0000	108000.0000
Heat duty kW	6.0991	6.8555		
K values:				
Water	0.035	0.035	0.058	0.058
Cellulose	1.000E-010	1.000E-010	1.000E-010	1.000E-010

EQUIPMENT SUMMARIES

Xylan	1.000E-020	1.000E-020	1.000E-020	1.000E-020
Arabinan	1.000E-020	1.000E-020	1.000E-020	1.000E-020
Mannan	1.000E-020	1.000E-020	1.000E-020	1.000E-020
Galacatan	1.000E-020	1.000E-020	1.000E-020	1.000E-020
Alpha-D-Glucose	1.000E-010	1.000E-010	1.000E-010	1.000E-010
Xylose	1.227E-003	1.220E-003	1.415E-003	1.349E-003
Arabinose	6.253E-019	6.220E-019	7.482E-018	7.132E-018
Mannose	1.000E-020	1.000E-020	1.000E-020	1.000E-020
Galactose	1.000E-020	1.000E-020	1.000E-020	1.000E-020
Ethanol	0.658	0.658	0.954	0.864
HMF	123.775	124.799	138.625	80.003
Furfural	0.273	0.273	0.410	0.391
Calcium Sulfate	1.000E-010	1.000E-010	1.000E-010	1.000E-010
Glycerol	7.339E-008	7.292E-008	2.235E-007	2.258E-007
Lignin	1.000E-010	1.000E-010	1.000E-010	1.000E-010
Soluble Solids	1.000E-020	1.000E-020	1.000E-020	1.000E-020
Ash	1.000E-020	1.000E-020	1.000E-020	1.000E-020
Cell Mass	1.228E-003	1.221E-003	1.416E-003	1.350E-003
Sulfuric Acid	1.000E-020	1.000E-020	1.731E-020	2.674E-020
CalciumHydroxid	1.000E-010	1.000E-010	1.000E-010	1.000E-010
Cellulase	1.228E-003	1.221E-003	1.416E-003	1.350E-003
Air	90875.906	90393.453	1.015E+005	96703.562
Nitrogen	90875.906	90393.453	1.015E+005	96703.562
Oxygen	45045.992	44806.848	50847.316	48463.477
Carbon Dioxide	63.403	63.067	2240.527	2135.486
Acetaldehyde	9.710	9.671	10.868	8.695
3-Mth-1-Butanol	0.620	0.623	0.855	0.572
Methane	40013.977	39800.812	44061.895	41996.164
Ammonia	10.100	10.047	12.603	12.012

Equip. No.	95	115	119
Name	T-601	(T-804)	
Flash Mode	0	2	2
Param 1	100.0000	35.0000	20.0000
Param 2	126626.0000	101000.0000	102000.0000
Heat duty kW		91.1571	-4535.4229

K values:			
Water	0.265	0.056	0.023
Cellulose	1.000E-010	1.000E-010	1.000E-010
Xylan	1.000E-020	1.000E-020	1.000E-020
Arabinan	1.000E-020	1.000E-020	1.000E-020
Mannan	1.000E-020	1.000E-020	1.000E-020
Galacatan	1.000E-020	1.000E-020	1.000E-020
Alpha-D-Glucose	1.000E-010	1.000E-010	1.000E-010
Xylose	1.173E-003	1.519E-003	1.101E-003
Arabinose	1.839E-012	4.847E-018	6.059E-020
Mannose	4.858E-018	1.000E-020	1.000E-020
Galactose	4.858E-018	1.000E-020	1.000E-020
Ethanol	2.695	0.992	0.460
HMF	248.207	191.857	82.232
Furfural	1.208	0.436	0.198
Calcium Sulfate	1.000E-010	1.000E-010	1.000E-010
Glycerol	2.895E-005	1.861E-007	2.558E-008
Lignin	1.000E-010	1.000E-010	1.000E-010
Soluble Solids	1.000E-020	1.000E-020	1.000E-020

EQUIPMENT SUMMARIES

Ash	1.000E-020	1.000E-020	1.000E-020
Cell Mass	1.174E-003	1.521E-003	1.102E-003
Sulfuric Acid	4.424E-014	1.000E-020	1.000E-020
CalciumHydroxid	1.000E-010	1.000E-010	1.000E-010
Cellulase	1.174E-003	1.521E-003	1.102E-003
Air	41815.133	1.100E+005	82402.977
Nitrogen	41815.133	1.100E+005	82402.977
Oxygen	26280.031	54936.941	40690.090
Carbon Dioxide	5194.697	2335.175	56.245
Acetaldehyde	10.486	12.811	8.359
3-Mth-1-Butanol	2.998	1.166	0.447
Methane	16861.201	47901.332	36670.645
Ammonia	15.382	13.310	8.388

Component Separator Summary

Equip. No.	10	28	30	48
Name	T-203			
Top Temperature Spec	102.0000	37.0000	37.0000	28.0000
Bottom Temperature Spe	102.0000	37.0000	37.0000	28.0000
Split Destination:	1	0	1	0
Pressure Out Pa		108000.0000	108000.0000	
Component No. 2	1.0000		1.0000	
Component No. 3	1.0000		1.0000	
Component No. 4	1.0000		1.0000	
Component No. 5	1.0000		1.0000	
Component No. 6	1.0000		1.0000	
Component No. 7	1.0000		1.0000	
Component No. 8	1.0000		1.0000	
Component No. 9	1.0000		1.0000	
Component No. 10	1.0000		1.0000	
Component No. 11	1.0000		1.0000	
Component No. 15	1.0000		1.0000	
Component No. 16	1.0000		1.0000	
Component No. 17	1.0000		1.0000	
Component No. 18	1.0000		1.0000	
Component No. 19	1.0000		1.0000	
Component No. 20	1.0000		1.0000	
Component No. 21	1.0000		1.0000	
Component No. 22	1.0000		1.0000	
Component No. 23	1.0000		1.0000	
Component No. 24		1.0000		1.0000
Component No. 25		1.0000		1.0000
Component No. 26		1.0000		1.0000
Component No. 27		1.0000		1.0000

Equip. No.	50	62	64	77
Top Temperature Spec	28.0000	28.0000	28.0000	37.0000
Bottom Temperature Spec	28.0000	28.0000	28.0000	37.0000
Pressure Out Pa	108000.0000	108000.0000	108000.0000	
Component No. 1	1.0000	1.0000		
Component No. 12	1.0000	1.0000		
Component No. 13	1.0000	1.0000		

EQUIPMENT SUMMARIES

Component No. 14	1.0000	1.0000		
Component No. 24	1.0000	1.0000	1.0000	1.0000
Component No. 25	1.0000	1.0000	1.0000	1.0000
Component No. 26	1.0000	1.0000	1.0000	1.0000
Component No. 27	1.0000	1.0000	1.0000	1.0000

Equip. No.	79	88	90	96
Name				
Top Temperature Spec	37.0000	37.0000	37.0000	100.0000
Bottom Temperature Spec	37.0000	37.0000	37.0000	100.0000
Split Destination:	0	0	0	1
Pressure Out Pa	108000.0000	108000.0000	108000.0000	126626.0000
Component No. 1	1.0000	1.0000		
Component No. 2				1.0000
Component No. 3				1.0000
Component No. 4				1.0000
Component No. 5				1.0000
Component No. 6				1.0000
Component No. 7				1.0000
Component No. 8				1.0000
Component No. 9				1.0000
Component No. 10				1.0000
Component No. 11				1.0000
Component No. 12	1.0000	1.0000		
Component No. 13	1.0000	1.0000		
Component No. 14	1.0000	1.0000		
Component No. 15				1.0000
Component No. 17				1.0000
Component No. 18				1.0000
Component No. 19				1.0000
Component No. 20				1.0000
Component No. 21				1.0000
Component No. 22				1.0000
Component No. 23				1.0000
Component No. 24	1.0000	1.0000	1.0000	
Component No. 25	0.5000	1.0000	1.0000	
Component No. 26	1.0000	1.0000	1.0000	
Component No. 27	1.0000	1.0000		
Component No. 28		1.0000		
Component No. 29		1.0000		

Equip. No.	99	102	120
Name	GC-609	GV-808	
Top Temperature Specification	100.0000	100.0000	20.0000
Bottom Temperature Specificat	100.0000	100.0000	20.0000
Pressure Out Pa	108000.0000		
Component No. 1	0.9678	0.9900	
Component No. 2	0.0500		
Component No. 3	0.0500		
Component No. 4	0.0500		
Component No. 5	0.0500		
Component No. 6	0.0500		
Component No. 7	0.9660		
Component No. 8	0.9660		
Component No. 9	0.9660		
Component No. 10	0.9660		

EQUIPMENT SUMMARIES

Component No. 11		0.9660	
Component No. 12		0.9660	
Component No. 13	1.0000	0.9660	
Component No. 14		0.9660	
Component No. 15		0.0500	0.0500
Component No. 16		0.9660	
Component No. 17		0.0500	0.0500
Component No. 18		0.0500	
Component No. 19		0.0500	0.0500
Component No. 20		0.0500	0.0500
Component No. 21		0.0500	
Component No. 22		0.0500	
Component No. 23		1.0000	0.0500
Component No. 24	1.0000	1.0000	1.0000
Component No. 25	1.0000	1.0000	1.0000
Component No. 26	1.0000	1.0000	1.0000
Component No. 27	1.0000	1.0000	1.0000
Component No. 28		0.9660	
Component No. 29	1.0000	0.9660	
Component No. 30			1.0000
Component No. 31			1.0000

Heat Exchanger Summary

Equip. No.	18	20	26	36
Name	TT-220	TT-301A	COILS	COILS
Pressure drop 1 Pa	68900.0000	68900.0000		68900.0000
T Out Str 1 C	37.0000	37.0000	37.0000	37.0000
T Out Str 2 C	44.0000	44.0000	13.0000	32.0000
U W/m2-K	1278.0000	1278.0000	1278.0000	1278.0000
Shells in Series	1	1	1	1
No. of SS Passes	1	1	1	1
No. of TS Passes	1	1	1	1
Calc Ht Duty kW	-31222.4004	-1821.8668	-1190.8571	-9892.2354

Equip. No.	40	41	46	52
Name	TT-401A	TT-401B	COILS	TT-402A
Pressure drop 1 Pa	68900.0000	68900.0000		68900.0000
T Out Str 1 C	35.0000	28.0000	28.0000	35.0000
T Out Str 2 C	44.0000	13.0000	13.0000	44.0000
U W/m2-K	1278.0000	1278.0000	1278.0000	1278.0000
Shells in Series	1	1	1	1
No. of SS Passes	1	1	1	1
No. of TS Passes	1	1	1	1
Calc Ht Duty kW	-3.4576	-0.3686	-21.2656	-1127.4597

Equip. No.	53	60	75	86
Name	TT-402B	COILS	COILS	COILS
Pressure drop 1 Pa	68900.0000			
T Out Str 1 C	27.0000	28.0000	37.0000	37.0000
T Out Str 2 C	13.0000	13.0000	32.0000	32.0000
U W/m2-K	1278.0000	1278.0000	1278.0000	1278.0000
Shells in Series	1	1	1	1
No. of SS Passes	1	1	1	1

EQUIPMENT SUMMARIES

No. of TS Passes	1	1	1	1
Calc Ht Duty kW	-137.3453	-3138.3557	-1459.4891	-6071.8892

Equip. No.	93	94	97	112
Name	TT-615	TT-613	(REBOILER)	TT-802
Pressure drop 1 Pa	68900.0000	68900.0000		68900.0000
Pressure drop 2 Pa	13799.9990			
T Out Str 1 C		100.0000	106.0000	35.0000
T Out Str 2 C		148.0000	148.0000	44.0000
Subcooling Str 2 C	1.0000			
U W/m2-K	2272.0000	3976.0002	3976.0002	1278.0000
Shells in Series	1	1	1	1
No. of SS Passes	1	1	1	1
No. of TS Passes	1	1	1	1
No. of Zones	1	0	0	0
Calc Ht Duty kW	11441.8545	21214.6230	29.1290	-9258.0371
LMTD C	46.3528			
LMTD Corr F	1.0000			
Calc Area m2	108.6458			

Divider Summary

Equip. No.	19	21	39	67
Name				
Output stream #1	0.9787	0.0414	0.0031	0.2000
Output stream #2	0.0213	0.9586	0.9969	0.8000

Equip. No.	68	108
Name		
Split based on	0	3
Flow rate units	0	4
Output stream #1	0.2000	14000.0000
Output stream #2	0.8000	274400.0000
Output stream #3		25000.0000
Output stream #4		46.0000
Output stream #5		15000.0000

Compressor Summary

Equip. No.	128
Name	PB-810
Type of Compressor:	1
Pressure out Pa	108000.0000
Efficiency	0.8500
Actual power kW	9.8720
Cp/Cv	1.3130
Ideal Cp/Cv	1.3084
Theoretical power kW	8.3912

Page: 29
Recycle water

STREAM PROPERTIES

Stream No.	101	102	211	212
Name				
- - Overall - -				
Mass flow kg/h	145125.	190695.	14000.	1155.
Temp C	20.	100.	100.	20.
Pres Pa	446062.	446062.	452000.	108000.
Vapor mass fraction	0.0000	0.0000	0.0000	0.0000
Enth kW	-4.881E+005	-6.617E+005	-5.913E+004	-2557.
Std. sp gr , wtr = 1	1.118	1.091	1.009	1.824
Std. sp gr , air = 1	1.112	0.946	0.643	3.386
Average mol wt	32.	27.	19.	98.
Actual dens kg/m3	1131.685	1069.056	968.413	1835.945
Actual vol m3/h	128.	178.	14.	1.

STREAM PROPERTIES

Stream No.	213	214	215	216
Name	LP steam to preheat	HP steam to preheat		
- - Overall - -				
Mass flow kg/h	30416.	20957.	211653.	18256.
Temp C	148.	186.	160.	102.
Pres Pa	446062.	1135500.	1135535.	108000.
Vapor mass fraction	1.000	1.000	0.0000	1.000
Enth kW	-1.119E+005	-7.685E+004	-7.386E+005	-6.560E+004
Std. sp gr , wtr = 1	1.000	1.000	1.143	1.004
Std. sp gr , air = 1	0.622	0.622	0.909	0.638
Average mol wt	18.	18.	26.	18.
Actual dens kg/m3	2.361	5.677	1064.909	0.646
Actual vol m3/h	12882.	3692.	199.	28259.

STREAM PROPERTIES

Stream No.	217	218	221	222
Name				
- - Overall - -				
Mass flow kg/h	274400.	467797.	1751.	467423.
Temp C	100.	100.	20.	102.
Pres Pa	452000.	207000.	207000.	108000.
Vapor mass fraction	0.0000	0.0000	0.0000	0.0000
Enth kW	-1.159E+006	-1.832E+006	-5873.	-1.830E+006
Std. sp gr , wtr = 1	1.009	1.066	1.432	1.067
Std. sp gr , air = 1	0.643	0.741	1.001	0.742
Average mol wt	19.	21.	29.	22.
Actual dens kg/m3	968.413	1029.076	1429.765	1029.181
Actual vol m3/h	283.	455.	1.	454.

STREAM PROPERTIES

Stream No.	223	224	301	302
Name				
- - Overall - -				
Mass flow kg/h	457467.	9956.	438527.	18939.
Temp C	37.	37.	37.	37.
Pres Pa	453100.	453100.	453100.	453100.
Vapor mass fraction	0.0000	0.0000	0.0000	0.0000
Enth kW	-1.822E+006	-3.964E+004	-1.746E+006	-7.541E+004
Std. sp gr , wtr = 1	1.067	1.067	1.067	1.067
Std. sp gr , air = 1	0.742	0.742	0.742	0.742
Average mol wt	22.	22.	22.	22.
Actual dens kg/m3	1065.821	1065.821	1065.821	1065.821
Actual vol m3/h	429.	9.	411.	18.

STREAM PROPERTIES

Stream No.	303	304	305	306
Name				
- - Overall - -				
Mass flow kg/h	43144.	481671.	0.	474477.
Temp C	37.	37.	20.	38.
Pres Pa	108000.	108000.	425000.	108000.
Vapor mass fraction	0.0000	0.0000	1.000	0.0000
Enth kW	-1.792E+005	-1.925E+006	-0.046853	-1.903E+006
Std. sp gr , wtr = 1	1.025	1.063	0.619	1.046
Std. sp gr , air = 1	0.678	0.736	0.588	0.723
Average mol wt	20.	21.	17.	21.
Actual dens kg/m3	1034.266	1062.937	3.081	1044.890
Actual vol m3/h	42.	453.	0.	454.

STREAM PROPERTIES

Stream No.	307	308	411	412
Name				
- - Overall - -				
Mass flow kg/h	7194.	474477.	9925.	31.
Temp C	38.	38.	37.	37.
Pres Pa	108000.	453000.	453100.	453100.
Vapor mass fraction	1.000	0.0000	0.0000	0.0000
Enth kW	-1.800E+004	-1.903E+006	-3.952E+004	-122.9
Std. sp gr , wtr = 1	0.831	1.046	1.067	1.067
Std. sp gr , air = 1	1.467	0.723	0.742	0.742
Average mol wt	42.	21.	22.	22.
Actual dens kg/m3	1.786	1044.845	1065.821	1065.821
Actual vol m3/h	4029.	454.	9.	0.

STREAM PROPERTIES

Stream No.	413	414	415	416
Name				
- - Overall - -				
Mass flow kg/h	74.	15000.	450.	111.
Temp C	28.	27.	20.	20.
Pres Pa	108000.	314200.	108000.	452000.
Vapor mass fraction	0.0000	0.0000	0.0000	1.000
Enth kW	-287.6	-6.462E+004	-884.7	-83.89
Std. sp gr , wtr = 1	1.013	1.009	2.523	0.619
Std. sp gr , air = 1	0.718	0.643	6.220	0.588
Average mol wt	21.	19.	180.	17.
Actual dens kg/m3	1117.918	1007.659	2520.983	3.285
Actual vol m3/h	0.	15.	0.	34.

STREAM PROPERTIES

Stream No.	418	419	420	501
Name				
- - Overall - -				
Mass flow kg/h	28307.	29373.	24479.	99791.
Temp C	28.	28.	28.	37.
Pres Pa	790611.	108000.	520000.	108000.
Vapor mass fraction	1.000	1.000	0.0000	0.0000
Enth kW	9.165	-5976.	-1.028E+005	-4.011E+005
Std. sp gr , wtr = 1	0.862	0.856	1.014	1.045
Std. sp gr , air = 1	1.000	1.000	0.665	0.720
Average mol wt	29.	29.	19.	21.
Actual dens kg/m3	9.160	1.250	1038.019	1044.527
Actual vol m3/h	3090.	23496.	24.	96.

STREAM PROPERTIES

Stream No.	502	503	508	510
Name				
- - Overall - -				
Mass flow kg/h	99670.	498835.	15387.	483548.
Temp C	37.	37.	37.	37.
Pres Pa	108000.	108000.	108000.	520000.
Vapor mass fraction	0.0082787	0.0021600	1.000	0.0000
Enth kW	-3.983E+005	-2.003E+006	-3.624E+004	-1.970E+006
Std. sp gr , wtr = 1	1.039	1.044	0.830	1.019
Std. sp gr , air = 1	0.718	0.719	1.428	0.699
Average mol wt	21.	21.	41.	20.
Actual dens kg/m3	123.407	374.922	1.741	1020.054
Actual vol m3/h	808.	1331.	8840.	474.

STREAM PROPERTIES

Stream No.	611	631	632	633
Name				
- - Overall - -				
Mass flow kg/h	433590.	42986.	1.	107936.
Temp C	114.	100.	100.	100.
Pres Pa	492000.	108000.	452000.	452000.
Vapor mass fraction	0.0000	0.0000	0.0000	0.0000
Enth kW	-1.840E+006	-1.340E+005	-4.246	-4.559E+005
Std. sp gr , wtr = 1	1.005	1.329	1.008	1.009
Std. sp gr , air = 1	0.635	1.577	0.640	0.643
Average mol wt	18.	46.	19.	19.
Actual dens kg/m3	952.205	1464.100	966.734	968.413
Actual vol m3/h	455.	29.	0.	111.

STREAM PROPERTIES

Stream No.	634	812	813	821
Name				
- - Overall - -				
Mass flow kg/h	1.	121863.	4458.	2192.
Temp C	15.	35.	41.	20.
Pres Pa	452000.	404000.	108000.	102000.
Vapor mass fraction	0.0000	0.0000	1.000	0.0000
Enth kW	-4.422	-5.311E+005	-6271.	-6224.
Std. sp gr , wtr = 1	1.000	1.001	0.560	1.042
Std. sp gr , air = 1	0.622	0.629	0.880	1.094
Average mol wt	18.	18.	25.	32.
Actual dens kg/m3	998.735	1001.615	1.057	1610.333
Actual vol m3/h	0.	122.	4217.	1.

STREAM PROPERTIES

Stream No.	822	2101	2102	2103
Name				
- - Overall - -				
Mass flow kg/h	120211.	1155.	15155.	190695.
Temp C	20.	20.	98.	100.
Pres Pa	452000.	1073000.	532000.	446062.
Vapor mass fraction	0.0000	0.0000	0.0000	0.0000
Enth kW	-5.293E+005	-2557.	-6.169E+004	-6.617E+005
Std. sp gr , wtr = 1	0.999	1.824	1.044	1.091
Std. sp gr , air = 1	0.625	3.386	0.686	0.946
Average mol wt	18.	98.	20.	27.
Actual dens kg/m3	996.341	1836.122	1003.806	1069.056
Actual vol m3/h	121.	1.	15.	178.

STREAM PROPERTIES

Stream No.	2104	2105	2106	2107
Name				
- - Overall - -				
Mass flow kg/h	211653.	211653.	211653.	18264.
Temp C	176.	160.	160.	102.
Pres Pa	1135535.	1135535.	1135535.	108000.
Vapor mass fraction	0.0000	0.0000	0.0000	1.000
Enth kW	-7.385E+005	-7.386E+005	-7.386E+005	-6.561E+004
Std. sp gr , wtr = 1	1.081	1.143	1.143	1.005
Std. sp gr , air = 1	0.900	0.909	0.909	0.639
Average mol wt	26.	26.	26.	18.
Actual dens kg/m3	1002.022	1064.909	1064.909	0.646
Actual vol m3/h	211.	199.	199.	28280.

STREAM PROPERTIES

Stream No.	2108	2109	2110	2201
Name				
- - Overall - -				
Mass flow kg/h	193389.	8.	467797.	469548.
Temp C	102.	102.	100.	100.
Pres Pa	108000.	108000.	108000.	108000.
Vapor mass fraction	0.0000	0.0000	0.0000	0.0000
Enth kW	-6.730E+005	-19.13	-1.832E+006	-1.838E+006
Std. sp gr , wtr = 1	1.158	1.532	1.066	1.067
Std. sp gr , air = 1	0.946	5.195	0.741	0.742
Average mol wt	27.	150.	21.	21.
Actual dens kg/m3	1128.238	1439.676	1029.100	1030.236
Actual vol m3/h	171.	0.	455.	456.

STREAM PROPERTIES

Stream No.	2202	2203	2204	2205
Name				
- - Overall - -				
Mass flow kg/h	469548.	469548.	2126.	467423.
Temp C	102.	102.	102.	102.
Pres Pa	108000.	108000.	108000.	522000.
Vapor mass fraction	0.0043097	0.0043097	1.000	0.0000
Enth kW	-1.838E+006	-1.838E+006	-7676.	-1.830E+006
Std. sp gr , wtr = 1	1.067	1.067	1.004	1.067
Std. sp gr , air = 1	0.742	0.742	0.635	0.742
Average mol wt	21.	21.	18.	22.
Actual dens kg/m3	130.396	130.396	0.643	1029.062
Actual vol m3/h	3601.	3601.	3305.	454.

STREAM PROPERTIES

Stream No.	2206	3101	3102	3103
Name				
- - Overall - -				
Mass flow kg/h	467423.	25000.	25000.	18485.
Temp C	37.	100.	37.	28.
Pres Pa	453100.	452000.	383100.	790611.
Vapor mass fraction	0.0000	0.0000	0.0000	1.000
Enth kW	-1.861E+006	-1.056E+005	-1.074E+005	5.985
Std. sp gr , wtr = 1	1.067	1.009	1.009	0.862
Std. sp gr , air = 1	0.742	0.643	0.643	1.000
Average mol wt	22.	19.	19.	29.
Actual dens kg/m3	1065.821	968.413	1004.425	9.160
Actual vol m3/h	439.	26.	25.	2018.

STREAM PROPERTIES

Stream No.	3104	3105	3106	3107
Name				
- - Overall - -				
Mass flow kg/h	18.	62520.	62520.	62514.
Temp C	20.	30.	31.	50.
Pres Pa	852000.	108000.	108219.	108219.
Vapor mass fraction	0.0000	0.30438	0.30477	0.32243
Enth kW	-1.504	-1.829E+005	-1.828E+005	-1.818E+005
Std. sp gr , wtr = 1	1.000	0.975	0.975	0.969
Std. sp gr , air = 1	79.846	0.753	0.753	0.750
Average mol wt	2313.	22.	22.	22.
Actual dens kg/m3	127676.031	4.003	3.992	3.484
Actual vol m3/h	0.	15617.	15661.	17941.

STREAM PROPERTIES

Stream No.	3108	3109	3110	3111
Name				
- - Overall - -				
Mass flow kg/h	62514.	19369.	43145.	1.
Temp C	37.	37.	37.	37.
Pres Pa	108219.	108000.	108000.	108000.
Vapor mass fraction	0.30981	1.000	0.0000	1.000
Enth kW	-1.830E+005	-3768.	-1.792E+005	-1.619
Std. sp gr , wtr = 1	0.969	0.863	1.025	0.841
Std. sp gr , air = 1	0.750	0.985	0.678	1.225
Average mol wt	22.	29.	20.	35.
Actual dens kg/m3	3.858	1.196	1034.210	1.489
Actual vol m3/h	16205.	16199.	42.	1.

STREAM PROPERTIES

Stream No.	3112	3113	3114	3115
Name				
- - Overall - -				
Mass flow kg/h	19371.	19370.	0.	43144.
Temp C	37.	37.	37.	37.
Pres Pa	108000.	108000.	108000.	108000.
Vapor mass fraction	1.000	1.000	0.0000	0.0000
Enth kW	-3769.	-3769.	-0.020561	-1.792E+005
Std. sp gr , wtr = 1	0.863	0.863	1.000	1.025
Std. sp gr , air = 1	0.985	0.985	79.167	0.678
Average mol wt	29.	29.	2293.	20.
Actual dens kg/m3	1.196	1.196	123915.336	1034.260
Actual vol m3/h	16199.	16199.	0.	42.

STREAM PROPERTIES

Stream No.	3116	3117	3118	3119
Name				
- - Overall - -				
Mass flow kg/h	62520.	481671.	481671.	481671.
Temp C	31.	37.	37.	57.
Pres Pa	108219.	108084.	108084.	108084.
Vapor mass fraction	0.30477	0.0000	0.0000	0.016428
Enth kW	-1.828E+005	-1.925E+006	-1.925E+006	-1.911E+006
Std. sp gr , wtr = 1	0.975	1.063	1.063	1.042
Std. sp gr , air = 1	0.753	0.736	0.736	0.728
Average mol wt	22.	21.	21.	21.
Actual dens kg/m3	3.992	1062.866	1062.866	88.131
Actual vol m3/h	15661.	453.	453.	5465.

STREAM PROPERTIES

Stream No.	3120	3121	3122	3123
Name				
- - Overall - -				
Mass flow kg/h	481671.	78.	62514.	481671.
Temp C	37.	20.	50.	57.
Pres Pa	39184.	425000.	108219.	108084.
Vapor mass fraction	0.016583	1.000	0.32243	0.016428
Enth kW	-1.921E+006	-59.02	-1.818E+005	-1.911E+006
Std. sp gr , wtr = 1	1.042	0.619	0.969	1.042
Std. sp gr , air = 1	0.728	0.588	0.750	0.728
Average mol wt	21.	17.	22.	21.
Actual dens kg/m3	35.500	3.081	3.484	88.131
Actual vol m3/h	13568.	25.	17941.	5465.

STREAM PROPERTIES

Stream No.	4101	4102	4103	4104
Name				
- - Overall - -				
Mass flow kg/h	46.	46.	46.	515.
Temp C	100.	35.	28.	28.
Pres Pa	452000.	383100.	314200.	790611.
Vapor mass fraction	0.0000	0.0000	0.0000	1.000
Enth kW	-194.3	-197.7	-198.1	0.16687
Std. sp gr , wtr = 1	1.009	1.009	1.009	0.862
Std. sp gr , air = 1	0.643	0.643	0.643	1.000
Average mol wt	19.	19.	19.	29.
Actual dens kg/m3	968.413	1005.139	1007.374	9.160
Actual vol m3/h	0.	0.	0.	56.

STREAM PROPERTIES

Stream No.	4105	4106	4107	4108
Name				
- - Overall - -				
Mass flow kg/h	10.	603.	603.	603.
Temp C	20.	23.	45.	45.
Pres Pa	852000.	432000.	433798.	433798.
Vapor mass fraction	0.0000	0.85939	0.86819	0.86819
Enth kW	-19.66	-341.4	-332.8	-332.8
Std. sp gr , wtr = 1	2.523	0.890	0.890	0.890
Std. sp gr , air = 1	6.220	0.954	0.954	0.954
Average mol wt	180.	28.	28.	28.
Actual dens kg/m3	2520.983	5.901	5.420	5.420
Actual vol m3/h	0.	102.	111.	111.

STREAM PROPERTIES

Stream No.	4109	4110	4111	4112
Name				
- - Overall - -				
Mass flow kg/h	603.	603.	530.	74.
Temp C	67.	28.	28.	28.
Pres Pa	433798.	433798.	108000.	108000.
Vapor mass fraction	0.89433	0.86278	1.000	0.0000
Enth kW	-334.0	-355.2	-61.51	-287.6
Std. sp gr , wtr = 1	0.878	0.878	0.862	1.014
Std. sp gr , air = 1	0.946	0.946	0.990	0.718
Average mol wt	27.	27.	29.	21.
Actual dens kg/m3	4.871	5.821	1.238	1118.084
Actual vol m3/h	124.	104.	428.	0.

STREAM PROPERTIES

Stream No.	4113	4114	4115	4116
Name				
- - Overall - -				
Mass flow kg/h	530.	0.	74.	530.
Temp C	28.	28.	28.	28.
Pres Pa	108000.	108000.	108000.	108000.
Vapor mass fraction	1.000	1.000	0.0000	1.000
Enth kW	-61.51	-0.055469	-287.6	-61.57
Std. sp gr , wtr = 1	0.862	0.828	1.014	0.862
Std. sp gr , air = 1	0.990	1.484	0.717	0.990
Average mol wt	29.	43.	21.	29.
Actual dens kg/m3	1.238	1.863	1118.363	1.238
Actual vol m3/h	428.	0.	0.	428.

STREAM PROPERTIES

Stream No.	4117	4118	4119	4120
Name				
- - Overall - -				
Mass flow kg/h	0.	15000.	15000.	53867.
Temp C	28.	100.	35.	21.
Pres Pa	108000.	452000.	383100.	108000.
Vapor mass fraction	0.72298	0.0000	0.0000	0.53551
Enth kW	-0.059120	-6.336E+004	-6.448E+004	-1.054E+005
Std. sp gr , wtr = 1	0.721	1.009	1.009	0.938
Std. sp gr , air = 1	0.932	0.643	0.643	0.824
Average mol wt	27.	19.	19.	24.
Actual dens kg/m3	1.178	968.413	1005.139	2.358
Actual vol m3/h	0.	15.	15.	22849.

STREAM PROPERTIES

Stream No.	4121	4122	4123	4124
Name				
- - Overall - -				
Mass flow kg/h	53867.	53867.	53864.	53852.
Temp C	30.	30.	38.	59.
Pres Pa	109652.	109652.	109652.	109652.
Vapor mass fraction	0.54140	0.54140	0.55004	0.60365
Enth kW	-1.049E+005	-1.049E+005	-1.050E+005	-1.056E+005
Std. sp gr , wtr = 1	0.938	0.938	0.933	0.921
Std. sp gr , air = 1	0.824	0.824	0.822	0.814
Average mol wt	24.	24.	24.	24.
Actual dens kg/m3	2.283	2.283	2.186	1.803
Actual vol m3/h	23595.	23595.	24644.	29868.

STREAM PROPERTIES

Stream No.	4125	4126	4127	4128
Name				
- - Overall - -				
Mass flow kg/h	53852.	53852.	29345.	24507.
Temp C	59.	28.	28.	28.
Pres Pa	109652.	109652.	108000.	108000.
Vapor mass fraction	0.60365	0.54472	1.000	0.0000
Enth kW	-1.056E+005	-1.088E+005	-5906.	-1.029E+005
Std. sp gr , wtr = 1	0.921	0.921	0.856	1.013
Std. sp gr , air = 1	0.814	0.814	1.000	0.666
Average mol wt	24.	24.	29.	19.
Actual dens kg/m3	1.803	2.328	1.250	1037.309
Actual vol m3/h	29868.	23137.	23480.	24.

STREAM PROPERTIES

Stream No.	4129	4130	4131	4132
Name				
- - Overall - -				
Mass flow kg/h	1.	29344.	24508.	29.
Temp C	28.	28.	28.	28.
Pres Pa	108000.	108000.	108000.	108000.
Vapor mass fraction	0.11522	1.000	0.0000	1.000
Enth kW	-0.092217	-5906.	-1.029E+005	-70.11
Std. sp gr , wtr = 1	0.941	0.856	1.013	0.827
Std. sp gr , air = 1	5.461	1.000	0.666	1.509
Average mol wt	158.	29.	19.	44.
Actual dens kg/m3	7.381	1.250	1037.332	1.895
Actual vol m3/h	0.	23480.	24.	15.

STREAM PROPERTIES

Stream No.	4133	4134	4135	5101
Name				
- - Overall - -				
Mass flow kg/h	24479.	1.	603.	4896.
Temp C	28.	20.	67.	28.
Pres Pa	108000.	425000.	433798.	520000.
Vapor mass fraction	0.0000	1.000	0.89433	0.0000
Enth kW	-1.028E+005	-0.93938	-334.0	-2.056E+004
Std. sp gr , wtr = 1	1.014	0.619	0.878	1.014
Std. sp gr , air = 1	0.665	0.588	0.946	0.665
Average mol wt	19.	17.	27.	19.
Actual dens kg/m3	1038.058	3.081	4.871	1038.019
Actual vol m3/h	24.	0.	124.	5.

STREAM PROPERTIES

Stream No.	5102	5103	5104	5105
Name				
- - Overall - -				
Mass flow kg/h	19583.	94895.	379582.	0.
Temp C	28.	38.	38.	20.
Pres Pa	520000.	453000.	453000.	852000.
Vapor mass fraction	0.0000	0.0000	0.0000	0.0000
Enth kW	-8.223E+004	-3.806E+005	-1.522E+006	-1.966E-005
Std. sp gr , wtr = 1	1.014	1.046	1.046	2.523
Std. sp gr , air = 1	0.665	0.723	0.723	6.220
Average mol wt	19.	21.	21.	180.
Actual dens kg/m3	1038.019	1044.845	1044.845	2520.983
Actual vol m3/h	19.	91.	363.	0.

STREAM PROPERTIES

Stream No.	5106	5107	5108	5109
Name				
- - Overall - -				
Mass flow kg/h	13913.	0.	113944.	113944.
Temp C	28.	0.	34.	37.
Pres Pa	791000.	0.	108000.	109070.
Vapor mass fraction	1.000	0.0000	0.12924	0.13028
Enth kW	4.501	0.0000	-4.013E+005	-4.009E+005
Std. sp gr , wtr = 1	0.862	0.000	1.017	1.017
Std. sp gr , air = 1	1.000	0.000	0.745	0.745
Average mol wt	29.	0.	22.	22.
Actual dens kg/m3	9.165	0.000	9.233	9.126
Actual vol m3/h	1518.	0.	12341.	12486.

STREAM PROPERTIES

Stream No.	5110	5111	5112	5113
Name				
- - Overall - -				
Mass flow kg/h	113944.	113787.	113787.	113787.
Temp C	37.	48.	48.	37.
Pres Pa	109070.	109070.	109070.	109070.
Vapor mass fraction	0.13028	0.13577	0.13577	0.13094
Enth kW	-4.009E+005	-4.009E+005	-4.009E+005	-4.024E+005
Std. sp gr , wtr = 1	1.017	1.013	1.013	1.013
Std. sp gr , air = 1	0.745	0.744	0.744	0.744
Average mol wt	22.	22.	22.	22.
Actual dens kg/m3	9.126	8.518	8.518	9.263
Actual vol m3/h	12486.	13358.	13358.	12285.

STREAM PROPERTIES

Stream No.	5114	5115	5116	5117
Name				
- - Overall - -				
Mass flow kg/h	14899.	98888.	4.	98883.
Temp C	37.	37.	37.	37.
Pres Pa	109070.	109070.	108000.	108000.
Vapor mass fraction	1.000	0.0000	1.000	0.0000
Enth kW	-4074.	-3.983E+005	-7.831	-3.983E+005
Std. sp gr , wtr = 1	0.858	1.041	0.835	1.042
Std. sp gr , air = 1	0.997	0.716	1.327	0.716
Average mol wt	29.	21.	38.	21.
Actual dens kg/m3	1.222	1048.198	1.614	1048.271
Actual vol m3/h	12190.	94.	3.	94.

STREAM PROPERTIES

Stream No.	5118	5119	5120	5121
Name				
- - Overall - -				
Mass flow kg/h	14117.	14904.	786.	498835.
Temp C	37.	37.	37.	40.
Pres Pa	108000.	108000.	108000.	109115.
Vapor mass fraction	0.99834	1.000	1.000	0.0021884
Enth kW	-4099.	-4081.	2.534	-2.001E+006
Std. sp gr , wtr = 1	0.861	0.858	0.808	1.044
Std. sp gr , air = 1	0.999	0.997	0.967	0.719
Average mol wt	29.	29.	28.	21.
Actual dens kg/m3	1.216	1.210	1.174	371.530
Actual vol m3/h	11613.	12314.	670.	1343.

STREAM PROPERTIES

Stream No.	5122	5123	5124	5125
Name				
- - Overall - -				
Mass flow kg/h	498835.	498934.	498934.	498934.
Temp C	40.	43.	48.	37.
Pres Pa	109115.	109115.	109115.	109115.
Vapor mass fraction	0.0021884	0.0022339	0.032304	0.030838
Enth kW	-2.001E+006	-2.001E+006	-2.000E+006	-2.006E+006
Std. sp gr , wtr = 1	1.044	1.064	1.012	1.012
Std. sp gr , air = 1	0.719	0.725	0.711	0.711
Average mol wt	21.	21.	21.	21.
Actual dens kg/m3	371.530	365.371	48.857	54.096
Actual vol m3/h	1343.	1366.	10212.	9223.

STREAM PROPERTIES

Stream No.	5126	5127	5128	5129
Name				
- - Overall - -				
Mass flow kg/h	15386.	483548.	0.	483548.
Temp C	37.	37.	37.	37.
Pres Pa	109115.	109115.	108000.	108000.
Vapor mass fraction	1.000	0.0000	0.090525	2.258E-006
Enth kW	-3.624E+004	-1.970E+006	-0.14719	-1.970E+006
Std. sp gr , wtr = 1	0.830	1.019	1.103	1.019
Std. sp gr , air = 1	1.428	0.699	4.048	0.699
Average mol wt	41.	20.	117.	20.
Actual dens kg/m3	1.759	1020.111	8.099	1018.771
Actual vol m3/h	8749.	474.	0.	475.

STREAM PROPERTIES

Stream No.	5130	5131	5132	5133
Name				
- - Overall - -				
Mass flow kg/h	1.	15386.	483548.	240.
Temp C	37.	37.	37.	20.
Pres Pa	108000.	108000.	108000.	452000.
Vapor mass fraction	1.000	1.000	0.0000	1.000
Enth kW	0.0019338	-3.624E+004	-1.970E+006	-181.6
Std. sp gr , wtr = 1	0.831	0.830	1.019	0.619
Std. sp gr , air = 1	0.979	1.428	0.699	0.588
Average mol wt	28.	41.	20.	17.
Actual dens kg/m3	1.188	1.741	1020.114	3.285
Actual vol m3/h	0.	8840.	474.	73.

STREAM PROPERTIES

Stream No.	5134	5135	5136	6101
Name				
- - Overall - -				
Mass flow kg/h	100.	498934.	498934.	18256.
Temp C	20.	40.	48.	87.
Pres Pa	452000.	109115.	109115.	94200.
Vapor mass fraction	1.000	0.0021936	0.032304	0.0000
Enth kW	-75.26	-2.001E+006	-2.000E+006	-7.704E+004
Std. sp gr , wtr = 1	0.619	1.043	1.012	1.004
Std. sp gr , air = 1	0.588	0.719	0.711	0.638
Average mol wt	17.	21.	21.	18.
Actual dens kg/m3	3.285	370.531	48.857	969.981
Actual vol m3/h	30.	1347.	10212.	19.

STREAM PROPERTIES

Stream No.	6102	6103	6104	6105
Name				
- - Overall - -				
Mass flow kg/h	483548.	483548.	341.	483206.
Temp C	59.	100.	100.	100.
Pres Pa	451100.	382200.	382200.	382200.
Vapor mass fraction	0.0000	0.00070576	1.000	0.0000
Enth kW	-1.959E+006	-1.937E+006	-867.5	-1.936E+006
Std. sp gr , wtr = 1	1.019	1.019	0.844	1.019
Std. sp gr , air = 1	0.699	0.699	1.294	0.699
Average mol wt	20.	20.	37.	20.
Actual dens kg/m3	1009.233	856.533	4.690	982.590
Actual vol m3/h	479.	565.	73.	492.

STREAM PROPERTIES

Stream No.	6106	6107	6108	6109
Name				
- - Overall - -				
Mass flow kg/h	448694.	34359.	34359.	37039.
Temp C	100.	100.	106.	38.
Pres Pa	126626.	126626.	126626.	108000.
Vapor mass fraction	0.0000	0.0000	0.0000	0.99940
Enth kW	-1.851E+006	-8.511E+004	-8.508E+004	-5.921E+004
Std. sp gr , wtr = 1	0.993	1.544	1.544	0.842
Std. sp gr , air = 1	0.655	5.602	5.602	1.231
Average mol wt	19.	162.	162.	36.
Actual dens kg/m3	946.883	1953.875	1952.826	1.497
Actual vol m3/h	474.	18.	18.	24745.

STREAM PROPERTIES

Stream No.	6110	6208	6301	6302
Name				
- - Overall - -				
Mass flow kg/h	448847.	11419.	467949.	153.
Temp C	100.	115.	102.	100.
Pres Pa	126626.	623000.	108000.	126626.
Vapor mass fraction	0.0028555	0.0000	0.020012	1.000
Enth kW	-1.851E+006	-4.537E+004	-1.925E+006	-353.9
Std. sp gr , wtr = 1	0.993	1.013	1.031	0.826
Std. sp gr , air = 1	0.655	0.670	0.679	1.598
Average mol wt	19.	19.	20.	46.
Actual dens kg/m3	255.881	955.545	30.862	1.897
Actual vol m3/h	1754.	12.	15163.	81.

STREAM PROPERTIES

Stream No.	6303	6304	6305	6306
Name				
- - Overall - -				
Mass flow kg/h	424963.	424963.	436382.	1.
Temp C	100.	100.	100.	82.
Pres Pa	108000.	452000.	452000.	452000.
Vapor mass fraction	0.0000	0.0000	0.0000	0.0000
Enth kW	-1.798E+006	-1.798E+006	-1.843E+006	-4.284
Std. sp gr , wtr = 1	1.009	1.009	1.009	1.006
Std. sp gr , air = 1	0.642	0.642	0.643	0.636
Average mol wt	19.	19.	19.	18.
Actual dens kg/m3	968.784	968.711	968.413	977.390
Actual vol m3/h	439.	439.	451.	0.

STREAM PROPERTIES

Stream No.	6307	6308	8101	8102
Name				
- - Overall - -				
Mass flow kg/h	3.	42986.	18256.	130.
Temp C	66.	100.	87.	20.
Pres Pa	452000.	108000.	194200.	452000.
Vapor mass fraction	0.0000	0.0000	0.0000	1.000
Enth kW	-12.95	-1.340E+005	-7.704E+004	-98.24
Std. sp gr , wtr = 1	1.005	1.329	1.004	0.619
Std. sp gr , air = 1	0.632	1.577	0.638	0.588
Average mol wt	18.	46.	18.	17.
Actual dens kg/m3	985.383	1464.100	969.947	3.285
Actual vol m3/h	0.	29.	19.	40.

STREAM PROPERTIES

Stream No.	8103	8104	8105	8106
Name				
- - Overall - -				
Mass flow kg/h	126322.	126322.	126322.	126321.
Temp C	99.	99.	35.	35.
Pres Pa	108000.	411000.	342100.	342100.
Vapor mass fraction	0.00012872	0.0000	0.0000	0.041526
Enth kW	-5.330E+005	-5.330E+005	-5.423E+005	-5.381E+005
Std. sp gr , wtr = 1	1.007	1.007	1.007	0.968
Std. sp gr , air = 1	0.642	0.642	0.642	0.634
Average mol wt	19.	19.	19.	18.
Actual dens kg/m3	838.925	967.350	1003.344	78.343
Actual vol m3/h	151.	131.	126.	1612.

STREAM PROPERTIES

Stream No.	8107	8108	8109	8110
Name				
- - Overall - -				
Mass flow kg/h	126321.	126321.	121863.	4458.
Temp C	35.	35.	35.	35.
Pres Pa	342100.	342100.	101000.	101000.
Vapor mass fraction	0.033750	0.033750	0.0000	1.000
Enth kW	-5.374E+005	-5.374E+005	-5.311E+005	-6281.
Std. sp gr , wtr = 1	0.974	0.974	1.001	0.560
Std. sp gr , air = 1	0.636	0.636	0.629	0.880
Average mol wt	18.	18.	18.	25.
Actual dens kg/m3	92.934	92.934	1001.644	1.007
Actual vol m3/h	1359.	1359.	122.	4426.

STREAM PROPERTIES

Stream No.	8201	8203	8204	8205
Name				
- - Overall - -				
Mass flow kg/h	750.	122613.	122712.	122712.
Temp C	20.	35.	52.	52.
Pres Pa	404000.	102000.	102000.	102000.
Vapor mass fraction	1.000	0.0064952	0.0086714	0.0086714
Enth kW	-1.184	-5.311E+005	-5.311E+005	-5.311E+005
Std. sp gr , wtr = 1	1.127	1.002	1.000	1.000
Std. sp gr , air = 1	1.105	0.631	0.630	0.630
Average mol wt	32.	18.	18.	18.
Actual dens kg/m3	5.318	161.944	139.917	139.917
Actual vol m3/h	141.	757.	877.	877.

STREAM PROPERTIES

Stream No.	8206	8207	8208
Name			
- - Overall - -			
Mass flow kg/h	309.	122402.	120211.
Temp C	20.	20.	20.
Pres Pa	102000.	102000.	102000.
Vapor mass fraction	1.000	0.0000	0.0000
Enth kW	-157.5	-5.355E+005	-5.293E+005
Std. sp gr , wtr = 1	1.045	0.999	0.999
Std. sp gr , air = 1	1.147	0.629	0.625
Average mol wt	33.	18.	18.
Actual dens kg/m3	1.392	1003.219	996.370
Actual vol m3/h	222.	122.	121.

FLOW SUMMARIES

Stream No.	101	102	211	212
Stream Name				
Temp C	20.0000	100.1885	100.4411	20.0000
Pres Pa	446062.0312	446062.0312	452000.0000	108000.0000
Enth kW	-4.8812E+005	-6.6167E+005	-59134.	-2557.1
Vapor mass fraction	0.00000	0.00000	0.00000	0.00000
Total kg/h	145125.	190695.	14000.	1155.
Component mass fractions				
Water	0.5000	0.6105	0.9609	0.0000
Cellulose	0.2310	0.1758	0.0005	0.0000
Xylan	0.0903	0.0687	0.0000	0.0000
Arabinan	0.0068	0.0051	0.0000	0.0000
Mannan	0.0178	0.0135	0.0000	0.0000
Galacatan	0.0052	0.0040	0.0000	0.0000
Alpha-D-Glucose	0.0000	0.0000	0.0000	0.0000
Xylose	0.0000	0.0004	0.0060	0.0000
Arabinose	0.0000	0.0000	0.0004	0.0000
Mannose	0.0000	0.0000	0.0000	0.0000
Galactose	0.0000	0.0000	0.0000	0.0000
Ethanol	0.0000	0.0000	0.0000	0.0000
HMF	0.0000	0.0000	0.0000	0.0000
Furfural	0.0000	0.0004	0.0053	0.0000
Calcium Sulfate	0.0000	0.0000	0.0002	0.0000
Glycerol	0.0000	0.0016	0.0216	0.0000
Lignin	0.1200	0.0915	0.0021	0.0000
Soluble Solids	0.0280	0.0213	0.0005	0.0000
Ash	0.0010	0.0008	0.0000	0.0000
Cell Mass	0.0000	0.0000	0.0002	0.0000
Sulfuric Acid	0.0000	0.0061	0.0000	1.0000
CalciumHydroxide	0.0000	0.0000	0.0000	0.0000
Cellulase	0.0000	0.0002	0.0023	0.0000
Air	0.0000	0.0000	0.0000	0.0000
Nitrogen	0.0000	0.0000	0.0000	0.0000
Oxygen	0.0000	0.0000	0.0000	0.0000
Carbon Dioxide	0.0000	0.0000	0.0000	0.0000
Acetaldehyde	0.0000	0.0000	0.0000	0.0000
3-Mth-1-Butanol	0.0000	0.0000	0.0000	0.0000
Methane	0.0000	0.0000	0.0000	0.0000
Ammonia	0.0000	0.0000	0.0000	0.0000

FLOW SUMMARIES

Stream No.	213	214	215	216
Stream Name				
Temp C	147.6484	185.5510	159.9985	102.0000
Pres Pa	446062.0312	1135500.0000	1135535.0000	108000.0000
Enth kW	-1.1186E+005	-76851.	-7.3856E+005	-65596.
Vapor mass fraction	1.0000	1.0000	0.00000	1.0000
Total kg/h	30416.	20957.	211653.	18256.
Component mass fractions				
Water	1.0000	1.0000	0.6423	0.9687
Cellulose	0.0000	0.0000	0.1535	0.0000
Xylan	0.0000	0.0000	0.0043	0.0000
Arabinan	0.0000	0.0000	0.0003	0.0000
Mannan	0.0000	0.0000	0.0024	0.0000
Galacatan	0.0000	0.0000	0.0007	0.0000
Alpha-D-Glucose	0.0000	0.0000	0.0053	0.0000
Xylose	0.0000	0.0000	0.0567	0.0000
Arabinose	0.0000	0.0000	0.0042	0.0000
Mannose	0.0000	0.0000	0.0108	0.0000
Galactose	0.0000	0.0000	0.0032	0.0000
Ethanol	0.0000	0.0000	0.0000	0.0000
HMF	0.0000	0.0000	0.0001	0.0016
Furfural	0.0000	0.0000	0.0066	0.0297
Calcium Sulfate	0.0000	0.0000	0.0000	0.0000
Glycerol	0.0000	0.0000	0.0015	0.0000
Lignin	0.0000	0.0000	0.0824	0.0000
Soluble Solids	0.0000	0.0000	0.0192	0.0000
Ash	0.0000	0.0000	0.0007	0.0000
Cell Mass	0.0000	0.0000	0.0000	0.0000
Sulfuric Acid	0.0000	0.0000	0.0055	0.0000
CalciumHydroxide	0.0000	0.0000	0.0000	0.0000
Cellulase	0.0000	0.0000	0.0001	0.0000
Air	0.0000	0.0000	0.0000	0.0000
Nitrogen	0.0000	0.0000	0.0000	0.0000
Oxygen	0.0000	0.0000	0.0000	0.0000
Carbon Dioxide	0.0000	0.0000	0.0000	0.0000
Acetaldehyde	0.0000	0.0000	0.0000	0.0000
3-Mth-1-Butanol	0.0000	0.0000	0.0000	0.0000
Methane	0.0000	0.0000	0.0000	0.0000
Ammonia	0.0000	0.0000	0.0000	0.0000

FLOW SUMMARIES

Stream No.	217	218	221	222
Stream Name				
Temp C	100.4411	100.4595	20.0000	101.9520
Pres Pa	452000.0000	207000.0000	207000.0000	108000.0000
Enth kW	-1.1590E+006	-1.8319E+006	-5873.4	-1.8301E+006
Vapor mass fraction	0.00000	0.00000	0.00000	0.00000
Total kg/h	274400.	467797.	1751.	467423.
Component mass fractions				
Water	0.9609	0.8162	0.5000	0.8152
Cellulose	0.0005	0.0697	0.0000	0.0698
Xylan	0.0000	0.0020	0.0000	0.0020
Arabinan	0.0000	0.0001	0.0000	0.0001
Mannan	0.0000	0.0011	0.0000	0.0011
Galacatan	0.0000	0.0003	0.0000	0.0003
Alpha-D-Glucose	0.0000	0.0024	0.0000	0.0024
Xylose	0.0060	0.0292	0.0000	0.0292
Arabinose	0.0004	0.0022	0.0000	0.0022
Mannose	0.0000	0.0049	0.0000	0.0049
Galactose	0.0000	0.0014	0.0000	0.0014
Ethanol	0.0000	0.0000	0.0000	0.0000
HMF	0.0000	0.0000	0.0000	0.0000
Furfural	0.0053	0.0048	0.0000	0.0047
Calcium Sulfate	0.0002	0.0001	0.0000	0.0035
Glycerol	0.0216	0.0138	0.0000	0.0138
Lignin	0.0021	0.0385	0.0000	0.0385
Soluble Solids	0.0005	0.0090	0.0000	0.0090
Ash	0.0000	0.0003	0.0000	0.0003
Cell Mass	0.0002	0.0001	0.0000	0.0001
Sulfuric Acid	0.0000	0.0025	0.0000	0.0000
CalciumHydroxide	0.0000	0.0000	0.5000	0.0000
Cellulase	0.0023	0.0013	0.0000	0.0013
Air	0.0000	0.0000	0.0000	0.0000
Nitrogen	0.0000	0.0000	0.0000	0.0000
Oxygen	0.0000	0.0000	0.0000	0.0000
Carbon Dioxide	0.0000	0.0000	0.0000	0.0000
Acetaldehyde	0.0000	0.0000	0.0000	0.0000
3-Mth-1-Butanol	0.0000	0.0000	0.0000	0.0000
Methane	0.0000	0.0000	0.0000	0.0000
Ammonia	0.0000	0.0000	0.0000	0.0000

FLOW SUMMARIES

Stream No.	223	224	301	302
Stream Name				
Temp C	37.0000	37.0000	37.0000	37.0000
Pres Pa	453100.0312	453100.0312	453100.0312	453100.0312
Enth kW	-1.8216E+006	-39644.	-1.7462E+006	-75414.
Vapor mass fraction	0.00000	0.00000	0.00000	0.00000
Total kg/h	457467.	9956.	438527.	18939.
Component mass fractions				
Water	0.8152	0.8152	0.8152	0.8152
Cellulose	0.0698	0.0698	0.0698	0.0698
Xylan	0.0020	0.0020	0.0020	0.0020
Arabinan	0.0001	0.0001	0.0001	0.0001
Mannan	0.0011	0.0011	0.0011	0.0011
Galacatan	0.0003	0.0003	0.0003	0.0003
Alpha-D-Glucose	0.0024	0.0024	0.0024	0.0024
Xylose	0.0292	0.0292	0.0292	0.0292
Arabinose	0.0022	0.0022	0.0022	0.0022
Mannose	0.0049	0.0049	0.0049	0.0049
Galactose	0.0014	0.0014	0.0014	0.0014
Ethanol	0.0000	0.0000	0.0000	0.0000
HMF	0.0000	0.0000	0.0000	0.0000
Furfural	0.0047	0.0047	0.0047	0.0047
Calcium Sulfate	0.0035	0.0035	0.0035	0.0035
Glycerol	0.0138	0.0138	0.0138	0.0138
Lignin	0.0385	0.0385	0.0385	0.0385
Soluble Solids	0.0090	0.0090	0.0090	0.0090
Ash	0.0003	0.0003	0.0003	0.0003
Cell Mass	0.0001	0.0001	0.0001	0.0001
Sulfuric Acid	0.0000	0.0000	0.0000	0.0000
CalciumHydroxide	0.0000	0.0000	0.0000	0.0000
Cellulase	0.0013	0.0013	0.0013	0.0013
Air	0.0000	0.0000	0.0000	0.0000
Nitrogen	0.0000	0.0000	0.0000	0.0000
Oxygen	0.0000	0.0000	0.0000	0.0000
Carbon Dioxide	0.0000	0.0000	0.0000	0.0000
Acetaldehyde	0.0000	0.0000	0.0000	0.0000
3-Mth-1-Butanol	0.0000	0.0000	0.0000	0.0000
Methane	0.0000	0.0000	0.0000	0.0000
Ammonia	0.0000	0.0000	0.0000	0.0000

FLOW SUMMARIES

Stream No.	303	304	305	306
Stream Name				
Temp C	37.0000	36.9539	20.0000	37.6464
Pres Pa	108000.0000	108000.0000	425000.0000	108000.0000
Enth kW	-1.7923E+005	-1.9254E+006	-0.0468526	-1.9029E+006
Vapor mass fraction	0.00000	0.00000	1.0000	0.00000
Total kg/h	43144.	481671.	0.	474477.
Component mass fractions				
Water	0.9068	0.8234	0.0000	0.8355
Cellulose	0.0309	0.0663	0.0000	0.0673
Xylan	0.0009	0.0019	0.0000	0.0019
Arabinan	0.0001	0.0001	0.0000	0.0001
Mannan	0.0005	0.0011	0.0000	0.0011
Galacatan	0.0001	0.0003	0.0000	0.0003
Alpha-D-Glucose	0.0000	0.0022	0.0000	0.0003
Xylose	0.0000	0.0266	0.0000	0.0039
Arabinose	0.0000	0.0020	0.0000	0.0003
Mannose	0.0000	0.0045	0.0000	0.0007
Galactose	0.0000	0.0013	0.0000	0.0002
Ethanol	0.0000	0.0000	0.0000	0.0161
HMF	0.0000	0.0000	0.0000	0.0000
Furfural	0.0044	0.0047	0.0000	0.0047
Calcium Sulfate	0.0017	0.0034	0.0000	0.0034
Glycerol	0.0190	0.0143	0.0000	0.0145
Lignin	0.0181	0.0367	0.0000	0.0373
Soluble Solids	0.0042	0.0086	0.0000	0.0087
Ash	0.0002	0.0003	0.0000	0.0003
Cell Mass	0.0113	0.0011	0.0000	0.0012
Sulfuric Acid	0.0000	0.0000	0.0000	0.0000
CalciumHydroxide	0.0000	0.0000	0.0000	0.0000
Cellulase	0.0019	0.0014	0.0000	0.0014
Air	0.0000	0.0000	0.0000	0.0000
Nitrogen	0.0000	0.0000	0.0000	0.0000
Oxygen	0.0000	0.0000	0.0000	0.0000
Carbon Dioxide	0.0000	0.0000	0.0000	0.0008
Acetaldehyde	0.0000	0.0000	0.0000	0.0000
3-Mth-1-Butanol	0.0000	0.0000	0.0000	0.0000
Methane	0.0000	0.0000	0.0000	0.0000
Ammonia	0.0000	0.0000	1.0000	0.0000

FLOW SUMMARIES

Stream No.	307	308	411	412
Stream Name				
Temp C	37.6464	37.7658	37.0000	37.0000
Pres Pa	108000.0000	452999.9688	453100.0312	453100.0312
Enth kW	-17999.	-1.9028E+006	-39521.	-122.90
Vapor mass fraction	1.0000	0.00000	0.00000	0.00000
Total kg/h	7194.	474477.	9925.	31.
Component mass fractions				
Water	0.0253	0.8355	0.8152	0.8152
Cellulose	0.0000	0.0673	0.0698	0.0698
Xylan	0.0000	0.0019	0.0020	0.0020
Arabinan	0.0000	0.0001	0.0001	0.0001
Mannan	0.0000	0.0011	0.0011	0.0011
Galacatan	0.0000	0.0003	0.0003	0.0003
Alpha-D-Glucose	0.0000	0.0003	0.0024	0.0024
Xylose	0.0000	0.0039	0.0292	0.0292
Arabinose	0.0000	0.0003	0.0022	0.0022
Mannose	0.0000	0.0007	0.0049	0.0049
Galactose	0.0000	0.0002	0.0014	0.0014
Ethanol	0.0079	0.0161	0.0000	0.0000
HMF	0.0000	0.0000	0.0000	0.0000
Furfural	0.0010	0.0047	0.0047	0.0047
Calcium Sulfate	0.0000	0.0034	0.0035	0.0035
Glycerol	0.0000	0.0145	0.0138	0.0138
Lignin	0.0000	0.0373	0.0385	0.0385
Soluble Solids	0.0000	0.0087	0.0090	0.0090
Ash	0.0000	0.0003	0.0003	0.0003
Cell Mass	0.0000	0.0012	0.0001	0.0001
Sulfuric Acid	0.0000	0.0000	0.0000	0.0000
CalciumHydroxide	0.0000	0.0000	0.0000	0.0000
Cellulase	0.0000	0.0014	0.0013	0.0013
Air	0.0000	0.0000	0.0000	0.0000
Nitrogen	0.0000	0.0000	0.0000	0.0000
Oxygen	0.0000	0.0000	0.0000	0.0000
Carbon Dioxide	0.9658	0.0008	0.0000	0.0000
Acetaldehyde	0.0000	0.0000	0.0000	0.0000
3-Mth-1-Butanol	0.0000	0.0000	0.0000	0.0000
Methane	0.0000	0.0000	0.0000	0.0000
Ammonia	0.0000	0.0000	0.0000	0.0000

FLOW SUMMARIES

Stream No.	413	414	415	416
Stream Name				
Temp C	28.3525	27.0000	20.0000	20.0000
Pres Pa	108000.0000	314200.0000	108000.0000	452000.0000
Enth kW	-287.61	-64618.	-884.70	-83.886
Vapor mass fraction	0.00000	0.00000	0.00000	1.0000
Total kg/h	74.	15000.	450.	111.
Component mass fractions				
Water	0.8576	0.9604	0.0000	0.0000
Cellulose	0.0000	0.0005	0.0000	0.0000
Xylan	0.0008	0.0000	0.0000	0.0000
Arabinan	0.0001	0.0000	0.0000	0.0000
Mannan	0.0000	0.0000	0.0000	0.0000
Galacatan	0.0000	0.0000	0.0000	0.0000
Alpha-D-Glucose	0.0000	0.0000	1.0000	0.0000
Xylose	0.0000	0.0060	0.0000	0.0000
Arabinose	0.0000	0.0004	0.0000	0.0000
Mannose	0.0000	0.0000	0.0000	0.0000
Galactose	0.0000	0.0000	0.0000	0.0000
Ethanol	0.0000	0.0000	0.0000	0.0000
HMF	0.0000	0.0000	0.0000	0.0000
Furfural	0.0021	0.0051	0.0000	0.0000
Calcium Sulfate	0.0016	0.0002	0.0000	0.0000
Glycerol	0.0197	0.0224	0.0000	0.0000
Lignin	0.0174	0.0021	0.0000	0.0000
Soluble Solids	0.0041	0.0005	0.0000	0.0000
Ash	0.0001	0.0000	0.0000	0.0000
Cell Mass	0.0935	0.0002	0.0000	0.0000
Sulfuric Acid	0.0000	0.0000	0.0000	0.0000
CalciumHydroxide	0.0000	0.0000	0.0000	0.0000
Cellulase	0.0019	0.0022	0.0000	0.0000
Air	0.0000	0.0000	0.0000	0.0000
Nitrogen	0.0000	0.0000	0.0000	0.0000
Oxygen	0.0000	0.0000	0.0000	0.0000
Carbon Dioxide	0.0000	0.0000	0.0000	0.0000
Acetaldehyde	0.0000	0.0000	0.0000	0.0000
3-Mth-1-Butanol	0.0000	0.0000	0.0000	0.0000
Methane	0.0000	0.0000	0.0000	0.0000
Ammonia	0.0010	0.0000	0.0000	1.0000

FLOW SUMMARIES

Stream No.	418	419	420	501
Stream Name				
Temp C	28.0000	28.0000	28.1319	37.2855
Pres Pa	790611.0000	108000.0000	520000.0000	108000.0000
Enth kW	9.1651	-5976.3	-1.0279E+005	-4.0112E+005
Vapor mass fraction	1.0000	1.0000	0.00000	0.00000
Total kg/h	28307.	29373.	24479.	99791.
Component mass fractions				
Water	0.0000	0.0217	0.9274	0.8400
Cellulose	0.0000	0.0000	0.0000	0.0640
Xylan	0.0000	0.0000	0.0008	0.0019
Arabinan	0.0000	0.0000	0.0001	0.0001
Mannan	0.0000	0.0000	0.0000	0.0010
Galacatan	0.0000	0.0000	0.0000	0.0003
Alpha-D-Glucose	0.0000	0.0000	0.0000	0.0003
Xylose	0.0000	0.0000	0.0000	0.0037
Arabinose	0.0000	0.0000	0.0000	0.0003
Mannose	0.0000	0.0000	0.0000	0.0006
Galactose	0.0000	0.0000	0.0000	0.0002
Ethanol	0.0000	0.0000	0.0000	0.0153
HMF	0.0000	0.0000	0.0000	0.0000
Furfural	0.0000	0.0007	0.0041	0.0047
Calcium Sulfate	0.0000	0.0000	0.0016	0.0033
Glycerol	0.0000	0.0000	0.0194	0.0147
Lignin	0.0000	0.0000	0.0170	0.0363
Soluble Solids	0.0000	0.0000	0.0040	0.0085
Ash	0.0000	0.0000	0.0001	0.0003
Cell Mass	0.0000	0.0000	0.0115	0.0017
Sulfuric Acid	0.0000	0.0000	0.0000	0.0000
CalciumHydroxide	0.0000	0.0000	0.0000	0.0000
Cellulase	0.0000	0.0000	0.0141	0.0020
Air	1.0000	0.8125	0.0000	0.0000
Nitrogen	0.0000	0.1156	0.0000	0.0000
Oxygen	0.0000	0.0000	0.0000	0.0000
Carbon Dioxide	0.0000	0.0494	0.0000	0.0008
Acetaldehyde	0.0000	0.0000	0.0000	0.0000
3-Mth-1-Butanol	0.0000	0.0000	0.0000	0.0000
Methane	0.0000	0.0000	0.0000	0.0000
Ammonia	0.0000	0.0000	0.0000	0.0000

FLOW SUMMARIES

Stream No.	502	503	508	510
Stream Name				
Temp C	36.7592	37.1361	37.0000	37.1443
Pres Pa	108000.0000	108000.0000	108000.0000	520000.0000
Enth kW	-3.9830E+005	-2.0028E+006	-36243.	-1.9699E+006
Vapor mass fraction	0.00914154	0.00240542	1.0000	0.00000
Total kg/h	99670.	498835.	15387.	483548.
Component mass fractions				
Water	0.8397	0.8399	0.0245	0.8592
Cellulose	0.0547	0.0621	0.0000	0.0083
Xylan	0.0019	0.0019	0.0000	0.0004
Arabinan	0.0001	0.0001	0.0000	0.0000
Mannan	0.0009	0.0010	0.0000	0.0002
Galacatan	0.0003	0.0003	0.0000	0.0001
Alpha-D-Glucose	0.0000	0.0002	0.0000	0.0000
Xylose	0.0037	0.0037	0.0000	0.0056
Arabinose	0.0003	0.0003	0.0000	0.0004
Mannose	0.0000	0.0005	0.0000	0.0000
Galactose	0.0000	0.0001	0.0000	0.0000
Ethanol	0.0139	0.0150	0.0187	0.0438
HMF	0.0000	0.0000	0.0000	0.0000
Furfural	0.0045	0.0046	0.0009	0.0048
Calcium Sulfate	0.0033	0.0033	0.0000	0.0034
Glycerol	0.0147	0.0147	0.0000	0.0202
Lignin	0.0363	0.0363	0.0000	0.0374
Soluble Solids	0.0085	0.0085	0.0000	0.0087
Ash	0.0003	0.0003	0.0000	0.0003
Cell Mass	0.0070	0.0027	0.0000	0.0040
Sulfuric Acid	0.0000	0.0000	0.0000	0.0000
CalciumHydroxide	0.0000	0.0000	0.0000	0.0000
Cellulase	0.0020	0.0020	0.0000	0.0021
Air	0.0000	0.0000	0.0000	0.0000
Nitrogen	0.0079	0.0016	0.0511	0.0000
Oxygen	0.0000	0.0000	0.0028	0.0000
Carbon Dioxide	0.0000	0.0006	0.9017	0.0009
Acetaldehyde	0.0000	0.0000	0.0003	0.0001
3-Mth-1-Butanol	0.0000	0.0000	0.0000	0.0000
Methane	0.0000	0.0000	0.0000	0.0000
Ammonia	0.0000	0.0000	0.0000	0.0000

FLOW SUMMARIES

Stream No.	611	631	632	633
Stream Name				
Temp C	113.8000	100.0000	100.1007	100.4411
Pres Pa	491999.9688	108000.0000	452000.0000	452000.0000
Enth kW	-1.8400E+006	-1.3403E+005	-4.2460	-4.5591E+005
Vapor mass fraction	0.00000	0.00000	0.00000	0.00000
Total kg/h	433590.	42986.	1.	107936.
Component mass fractions				
Water	0.9744	0.3160	0.9669	0.9609
Cellulose	0.0000	0.0891	0.0004	0.0005
Xylan	0.0000	0.0041	0.0000	0.0000
Arabinan	0.0000	0.0003	0.0000	0.0000
Mannan	0.0000	0.0022	0.0000	0.0000
Galacatan	0.0000	0.0006	0.0000	0.0000
Alpha-D-Glucose	0.0000	0.0000	0.0000	0.0000
Xylose	0.0000	0.0021	0.0047	0.0060
Arabinose	0.0000	0.0002	0.0004	0.0004
Mannose	0.0000	0.0000	0.0000	0.0000
Galactose	0.0000	0.0000	0.0000	0.0000
Ethanol	0.0000	0.0000	0.0000	0.0000
HMF	0.0000	0.0000	0.0000	0.0000
Furfural	0.0031	0.0011	0.0014	0.0053
Calcium Sulfate	0.0000	0.0368	0.0004	0.0002
Glycerol	0.0225	0.0077	0.0220	0.0216
Lignin	0.0000	0.4000	0.0019	0.0021
Soluble Solids	0.0000	0.0933	0.0004	0.0005
Ash	0.0000	0.0033	0.0000	0.0000
Cell Mass	0.0000	0.0431	0.0003	0.0002
Sulfuric Acid	0.0000	0.0000	0.0000	0.0000
CalciumHydroxide	0.0000	0.0001	0.0000	0.0000
Cellulase	0.0000	0.0000	0.0011	0.0023
Air	0.0000	0.0000	0.0000	0.0000
Nitrogen	0.0000	0.0000	0.0000	0.0000
Oxygen	0.0000	0.0000	0.0000	0.0000
Carbon Dioxide	0.0000	0.0000	0.0000	0.0000
Acetaldehyde	0.0000	0.0000	0.0000	0.0000
3-Mth-1-Butanol	0.0000	0.0000	0.0000	0.0000
Methane	0.0000	0.0000	0.0000	0.0000
Ammonia	0.0000	0.0000	0.0000	0.0000

FLOW SUMMARIES

Stream No.	634	812	813	821
Stream Name				
Temp C	15.0000	35.0852	40.7788	20.0000
Pres Pa	452000.0000	404000.0000	108000.0000	102000.0000
Enth kW	-4.4219	-5.3105E+005	-6270.7	-6224.4
Vapor mass fraction	0.00000	0.00000	1.0000	0.00000
Total kg/h	1.	121863.	4458.	2192.
Component mass fractions				
Water	1.0000	0.9876	0.0395	0.5504
Cellulose	0.0000	0.0000	0.0000	0.0000
Xylan	0.0000	0.0000	0.0000	0.0000
Arabinan	0.0000	0.0000	0.0000	0.0000
Mannan	0.0000	0.0000	0.0000	0.0000
Galacatan	0.0000	0.0000	0.0000	0.0000
Alpha-D-Glucose	0.0000	0.0000	0.0000	0.0000
Xylose	0.0000	0.0005	0.0000	0.0000
Arabinose	0.0000	0.0000	0.0000	0.0000
Mannose	0.0000	0.0000	0.0000	0.0000
Galactose	0.0000	0.0000	0.0000	0.0000
Ethanol	0.0000	0.0000	0.0000	0.0000
HMF	0.0000	0.0000	0.0005	0.0000
Furfural	0.0000	0.0009	0.0003	0.0000
Calcium Sulfate	0.0000	0.0002	0.0000	0.0089
Glycerol	0.0000	0.0019	0.0000	0.0000
Lignin	0.0000	0.0018	0.0000	0.0970
Soluble Solids	0.0000	0.0000	0.0000	0.0000
Ash	0.0000	0.0000	0.0000	0.0008
Cell Mass	0.0000	0.0065	0.0000	0.3428
Sulfuric Acid	0.0000	0.0000	0.0000	0.0000
CalciumHydroxide	0.0000	0.0000	0.0000	0.0000
Cellulase	0.0000	0.0002	0.0000	0.0000
Air	0.0000	0.0000	0.0000	0.0000
Nitrogen	0.0000	0.0000	0.0091	0.0000
Oxygen	0.0000	0.0000	0.2888	0.0000
Carbon Dioxide	0.0000	0.0002	0.3426	0.0000
Acetaldehyde	0.0000	0.0000	0.0000	0.0000
3-Mth-1-Butanol	0.0000	0.0000	0.0000	0.0000
Methane	0.0000	0.0000	0.3192	0.0000
Ammonia	0.0000	0.0000	0.0000	0.0000

FLOW SUMMARIES

Stream No.	822	2101	2102	2103
Stream Name				
Temp C	20.0970	19.8553	98.2675	100.1885
Pres Pa	452000.0000	1073000.0000	532000.0000	446062.0312
Enth kW	-5.2927E+005	-2556.9	-61686.	-6.6167E+005
Vapor mass fraction	0.00000	0.00000	0.00000	0.00000
Total kg/h	120211.	1155.	15155.	190695.
Component mass fractions				
Water	0.9934	0.0000	0.8872	0.6105
Cellulose	0.0000	0.0000	0.0004	0.1758
Xylan	0.0000	0.0000	0.0000	0.0687
Arabinan	0.0000	0.0000	0.0000	0.0051
Mannan	0.0000	0.0000	0.0000	0.0135
Galacatan	0.0000	0.0000	0.0000	0.0040
Alpha-D-Glucose	0.0000	0.0000	0.0000	0.0000
Xylose	0.0000	0.0000	0.0055	0.0004
Arabinose	0.0000	0.0000	0.0004	0.0000
Mannose	0.0000	0.0000	0.0000	0.0000
Galactose	0.0000	0.0000	0.0000	0.0000
Ethanol	0.0000	0.0000	0.0000	0.0000
HMF	0.0000	0.0000	0.0000	0.0000
Furfural	0.0000	0.0000	0.0047	0.0004
Calcium Sulfate	0.0000	0.0000	0.0002	0.0000
Glycerol	0.0000	0.0000	0.0207	0.0016
Lignin	0.0001	0.0000	0.0019	0.0915
Soluble Solids	0.0000	0.0000	0.0004	0.0213
Ash	0.0000	0.0000	0.0000	0.0008
Cell Mass	0.0003	0.0000	0.0002	0.0000
Sulfuric Acid	0.0000	1.0000	0.0762	0.0061
CalciumHydroxide	0.0000	0.0000	0.0000	0.0000
Cellulase	0.0000	0.0000	0.0020	0.0002
Air	0.0000	0.0000	0.0000	0.0000
Nitrogen	0.0000	0.0000	0.0000	0.0000
Oxygen	0.0000	0.0000	0.0000	0.0000
Carbon Dioxide	0.0061	0.0000	0.0000	0.0000
Acetaldehyde	0.0000	0.0000	0.0000	0.0000
3-Mth-1-Butanol	0.0000	0.0000	0.0000	0.0000
Methane	0.0000	0.0000	0.0000	0.0000
Ammonia	0.0000	0.0000	0.0000	0.0000

FLOW SUMMARIES

Stream No.	2104	2105	2106	2107
Stream Name				
Temp C	175.7972	159.9985	159.9985	102.2499
Pres Pa	1135535.0000	1135535.0000	1135535.0000	108000.0000
Enth kW	-7.3852E+005	-7.3856E+005	-7.3856E+005	-65609.
Vapor mass fraction	0.00000	0.00000	0.00000	1.0000
Total kg/h	211653.	211653.	211653.	18264.
Component mass fractions				
Water	0.6491	0.6423	0.6423	0.9683
Cellulose	0.1584	0.1535	0.1535	0.0000
Xylan	0.0619	0.0043	0.0043	0.0000
Arabinan	0.0046	0.0003	0.0003	0.0000
Mannan	0.0122	0.0024	0.0024	0.0000
Galacatan	0.0036	0.0007	0.0007	0.0000
Alpha-D-Glucose	0.0000	0.0053	0.0053	0.0000
Xylose	0.0004	0.0567	0.0567	0.0005
Arabinose	0.0000	0.0042	0.0042	0.0000
Mannose	0.0000	0.0108	0.0108	0.0000
Galactose	0.0000	0.0032	0.0032	0.0000
Ethanol	0.0000	0.0000	0.0000	0.0000
HMF	0.0000	0.0001	0.0001	0.0016
Furfural	0.0003	0.0066	0.0066	0.0297
Calcium Sulfate	0.0000	0.0000	0.0000	0.0000
Glycerol	0.0015	0.0015	0.0015	0.0000
Lignin	0.0824	0.0824	0.0824	0.0000
Soluble Solids	0.0192	0.0192	0.0192	0.0000
Ash	0.0007	0.0007	0.0007	0.0000
Cell Mass	0.0000	0.0000	0.0000	0.0000
Sulfuric Acid	0.0055	0.0055	0.0055	0.0000
CalciumHydroxide	0.0000	0.0000	0.0000	0.0000
Cellulase	0.0001	0.0001	0.0001	0.0000
Air	0.0000	0.0000	0.0000	0.0000
Nitrogen	0.0000	0.0000	0.0000	0.0000
Oxygen	0.0000	0.0000	0.0000	0.0000
Carbon Dioxide	0.0000	0.0000	0.0000	0.0000
Acetaldehyde	0.0000	0.0000	0.0000	0.0000
3-Mth-1-Butanol	0.0000	0.0000	0.0000	0.0000
Methane	0.0000	0.0000	0.0000	0.0000
Ammonia	0.0000	0.0000	0.0000	0.0000

FLOW SUMMARIES

Stream No.	2108	2109	2110	2201
Stream Name				
Temp C	102.2499	102.0000	100.4265	100.2263
Pres Pa	108000.0000	108000.0000	108000.0000	108000.0000
Enth kW	-6.7299E+005	-19.125	-1.8319E+006	-1.8378E+006
Vapor mass fraction	0.00000	0.00000	0.00000	0.00000
Total kg/h	193389.	8.	467797.	469548.
Component mass fractions				
Water	0.6115	0.0000	0.8162	0.8150
Cellulose	0.1680	0.0000	0.0697	0.0695
Xylan	0.0047	0.0000	0.0020	0.0020
Arabinan	0.0004	0.0000	0.0001	0.0001
Mannan	0.0027	0.0000	0.0011	0.0011
Galacatan	0.0008	0.0000	0.0003	0.0003
Alpha-D-Glucose	0.0058	0.0000	0.0024	0.0024
Xylose	0.0620	0.9965	0.0292	0.0290
Arabinose	0.0046	0.0000	0.0022	0.0022
Mannose	0.0119	0.0000	0.0049	0.0049
Galactose	0.0035	0.0000	0.0014	0.0014
Ethanol	0.0000	0.0000	0.0000	0.0000
HMF	0.0000	0.0000	0.0000	0.0000
Furfural	0.0044	0.0000	0.0048	0.0048
Calcium Sulfate	0.0000	0.0000	0.0001	0.0001
Glycerol	0.0016	0.0007	0.0138	0.0137
Lignin	0.0902	0.0000	0.0385	0.0384
Soluble Solids	0.0210	0.0000	0.0090	0.0090
Ash	0.0008	0.0000	0.0003	0.0003
Cell Mass	0.0000	0.0003	0.0001	0.0001
Sulfuric Acid	0.0060	0.0000	0.0025	0.0025
CalciumHydroxide	0.0000	0.0000	0.0000	0.0019
Cellulase	0.0002	0.0025	0.0013	0.0013
Air	0.0000	0.0000	0.0000	0.0000
Nitrogen	0.0000	0.0000	0.0000	0.0000
Oxygen	0.0000	0.0000	0.0000	0.0000
Carbon Dioxide	0.0000	0.0000	0.0000	0.0000
Acetaldehyde	0.0000	0.0000	0.0000	0.0000
3-Mth-1-Butanol	0.0000	0.0000	0.0000	0.0000
Methane	0.0000	0.0000	0.0000	0.0000
Ammonia	0.0000	0.0000	0.0000	0.0000

FLOW SUMMARIES

Stream No.	2202	2203	2204	2205
Stream Name				
Temp C	101.9518	101.9518	101.9520	102.1149
Pres Pa	108000.0000	108000.0000	108000.0000	522000.0000
Enth kW	-1.8378E+006	-1.8378E+006	-7675.6	-1.8300E+006
Vapor mass fraction	0.00486285	0.00486285	1.0000	0.00000
Total kg/h	469548.	469548.	2126.	467423.
Component mass fractions				
Water	0.8159	0.8159	0.9742	0.8152
Cellulose	0.0695	0.0695	0.0000	0.0698
Xylan	0.0020	0.0020	0.0000	0.0020
Arabinan	0.0001	0.0001	0.0000	0.0001
Mannan	0.0011	0.0011	0.0000	0.0011
Galacatan	0.0003	0.0003	0.0000	0.0003
Alpha-D-Glucose	0.0024	0.0024	0.0000	0.0024
Xylose	0.0290	0.0290	0.0002	0.0292
Arabinose	0.0022	0.0022	0.0000	0.0022
Mannose	0.0049	0.0049	0.0000	0.0049
Galactose	0.0014	0.0014	0.0000	0.0014
Ethanol	0.0000	0.0000	0.0002	0.0000
HMF	0.0000	0.0000	0.0001	0.0000
Furfural	0.0048	0.0048	0.0254	0.0047
Calcium Sulfate	0.0035	0.0035	0.0000	0.0035
Glycerol	0.0137	0.0137	0.0000	0.0138
Lignin	0.0384	0.0384	0.0000	0.0385
Soluble Solids	0.0090	0.0090	0.0000	0.0090
Ash	0.0003	0.0003	0.0000	0.0003
Cell Mass	0.0001	0.0001	0.0000	0.0001
Sulfuric Acid	0.0000	0.0000	0.0000	0.0000
CalciumHydroxide	0.0000	0.0000	0.0000	0.0000
Cellulase	0.0013	0.0013	0.0000	0.0013
Air	0.0000	0.0000	0.0000	0.0000
Nitrogen	0.0000	0.0000	0.0000	0.0000
Oxygen	0.0000	0.0000	0.0000	0.0000
Carbon Dioxide	0.0000	0.0000	0.0000	0.0000
Acetaldehyde	0.0000	0.0000	0.0000	0.0000
3-Mth-1-Butanol	0.0000	0.0000	0.0000	0.0000
Methane	0.0000	0.0000	0.0000	0.0000
Ammonia	0.0000	0.0000	0.0000	0.0000

FLOW SUMMARIES

Stream No.	2206	3101	3102	3103
Stream Name				
Temp C	37.0000	100.4411	37.0000	28.0000
Pres Pa	453100.0312	452000.0000	383100.0000	790611.0000
Enth kW	-1.8612E+006	-1.0560E+005	-1.0741E+005	5.9850
Vapor mass fraction	0.00000	0.00000	0.00000	1.0000
Total kg/h	467423.	25000.	25000.	18485.
Component mass fractions				
Water	0.8152	0.9609	0.9604	0.0000
Cellulose	0.0698	0.0005	0.0005	0.0000
Xylan	0.0020	0.0000	0.0000	0.0000
Arabinan	0.0001	0.0000	0.0000	0.0000
Mannan	0.0011	0.0000	0.0000	0.0000
Galacatan	0.0003	0.0000	0.0000	0.0000
Alpha-D-Glucose	0.0024	0.0000	0.0000	0.0000
Xylose	0.0292	0.0060	0.0060	0.0000
Arabinose	0.0022	0.0004	0.0004	0.0000
Mannose	0.0049	0.0000	0.0000	0.0000
Galactose	0.0014	0.0000	0.0000	0.0000
Ethanol	0.0000	0.0000	0.0000	0.0000
HMF	0.0000	0.0000	0.0000	0.0000
Furfural	0.0047	0.0053	0.0051	0.0000
Calcium Sulfate	0.0035	0.0002	0.0002	0.0000
Glycerol	0.0138	0.0216	0.0224	0.0000
Lignin	0.0385	0.0021	0.0021	0.0000
Soluble Solids	0.0090	0.0005	0.0005	0.0000
Ash	0.0003	0.0000	0.0000	0.0000
Cell Mass	0.0001	0.0002	0.0002	0.0000
Sulfuric Acid	0.0000	0.0000	0.0000	0.0000
CalciumHydroxide	0.0000	0.0000	0.0000	0.0000
Cellulase	0.0013	0.0023	0.0022	0.0000
Air	0.0000	0.0000	0.0000	1.0000
Nitrogen	0.0000	0.0000	0.0000	0.0000
Oxygen	0.0000	0.0000	0.0000	0.0000
Carbon Dioxide	0.0000	0.0000	0.0000	0.0000
Acetaldehyde	0.0000	0.0000	0.0000	0.0000
3-Mth-1-Butanol	0.0000	0.0000	0.0000	0.0000
Methane	0.0000	0.0000	0.0000	0.0000
Ammonia	0.0000	0.0000	0.0000	0.0000

FLOW SUMMARIES

Stream No.	3104	3105	3106	3107
Stream Name				
Temp C	20.0000	29.8734	30.7374	49.9741
Pres Pa	852000.0000	108000.0000	108218.5547	108218.5547
Enth kW	-1.5036	-1.8288E+005	-1.8282E+005	-1.8181E+005
Vapor mass fraction	0.00000	0.315649	0.316060	0.334116
Total kg/h	18.	62520.	62520.	62514.
Component mass fractions				
Water	0.0000	0.6310	0.6310	0.6372
Cellulose	0.0000	0.0213	0.0213	0.0213
Xylan	0.0000	0.0006	0.0006	0.0006
Arabinan	0.0000	0.0000	0.0000	0.0000
Mannan	0.0000	0.0003	0.0003	0.0003
Galacatan	0.0000	0.0001	0.0001	0.0001
Alpha-D-Glucose	0.0000	0.0007	0.0007	0.0000
Xylose	0.0000	0.0112	0.0112	0.0000
Arabinose	0.0000	0.0008	0.0008	0.0000
Mannose	0.0000	0.0015	0.0015	0.0000
Galactose	0.0000	0.0004	0.0004	0.0000
Ethanol	0.0000	0.0000	0.0000	0.0000
HMF	0.0000	0.0000	0.0000	0.0000
Furfural	0.0000	0.0034	0.0034	0.0034
Calcium Sulfate	0.0000	0.0012	0.0012	0.0012
Glycerol	0.0000	0.0131	0.0131	0.0131
Lignin	0.0000	0.0125	0.0125	0.0125
Soluble Solids	0.0000	0.0029	0.0029	0.0029
Ash	0.0000	0.0001	0.0001	0.0001
Cell Mass	1.0000	0.0004	0.0004	0.0078
Sulfuric Acid	0.0000	0.0000	0.0000	0.0000
CalciumHydroxide	0.0000	0.0000	0.0000	0.0000
Cellulase	0.0000	0.0013	0.0013	0.0013
Air	0.0000	0.2957	0.2957	0.2738
Nitrogen	0.0000	0.0000	0.0000	0.0167
Oxygen	0.0000	0.0000	0.0000	0.0000
Carbon Dioxide	0.0000	0.0000	0.0000	0.0076
Acetaldehyde	0.0000	0.0000	0.0000	0.0000
3-Mth-1-Butanol	0.0000	0.0000	0.0000	0.0000
Methane	0.0000	0.0000	0.0000	0.0000
Ammonia	0.0000	0.0012	0.0012	0.0000

FLOW SUMMARIES

Stream No.	3108	3109	3110	3111
Stream Name				
Temp C	37.0000	37.0000	37.0000	37.0000
Pres Pa	108218.5547	108000.0000	108000.0000	108000.0000
Enth kW	-1.8300E+005	-3767.6	-1.7923E+005	-1.6189
Vapor mass fraction	0.321047	1.0000	0.00000	1.0000
Total kg/h	62514.	19369.	43145.	1.
Component mass fractions				
Water	0.6372	0.0367	0.9067	0.0000
Cellulose	0.0213	0.0000	0.0309	0.0000
Xylan	0.0006	0.0000	0.0009	0.0000
Arabinan	0.0000	0.0000	0.0001	0.0000
Mannan	0.0003	0.0000	0.0005	0.0000
Galacatan	0.0001	0.0000	0.0001	0.0000
Alpha-D-Glucose	0.0000	0.0000	0.0000	0.0000
Xylose	0.0000	0.0000	0.0000	0.0000
Arabinose	0.0000	0.0000	0.0000	0.0000
Mannose	0.0000	0.0000	0.0000	0.0000
Galactose	0.0000	0.0000	0.0000	0.0000
Ethanol	0.0000	0.0000	0.0000	0.0000
HMF	0.0000	0.0000	0.0000	0.0000
Furfural	0.0034	0.0013	0.0044	0.0000
Calcium Sulfate	0.0012	0.0000	0.0017	0.0000
Glycerol	0.0131	0.0000	0.0190	0.0000
Lignin	0.0125	0.0000	0.0181	0.0000
Soluble Solids	0.0029	0.0000	0.0042	0.0000
Ash	0.0001	0.0000	0.0002	0.0000
Cell Mass	0.0078	0.0000	0.0113	0.0000
Sulfuric Acid	0.0000	0.0000	0.0000	0.0000
CalciumHydroxide	0.0000	0.0000	0.0000	0.0000
Cellulase	0.0013	0.0000	0.0019	0.0000
Air	0.2738	0.8837	0.0000	0.4331
Nitrogen	0.0167	0.0539	0.0000	0.0264
Oxygen	0.0000	0.0000	0.0000	0.0000
Carbon Dioxide	0.0076	0.0244	0.0000	0.5404
Acetaldehyde	0.0000	0.0000	0.0000	0.0000
3-Mth-1-Butanol	0.0000	0.0000	0.0000	0.0000
Methane	0.0000	0.0000	0.0000	0.0000
Ammonia	0.0000	0.0000	0.0000	0.0000

FLOW SUMMARIES

Stream No.	3112	3113	3114	3115
Stream Name				
Temp C	37.0000	37.0000	37.0000	37.0000
Pres Pa	108000.0000	108000.0000	108000.0000	108000.0000
Enth kW	-3769.2	-3769.2	-0.0205612	-1.7923E+005
Vapor mass fraction	1.0000	1.0000	0.00000	0.00000
Total kg/h	19371.	19370.	0.	43144.
Component mass fractions				
Water	0.0367	0.0367	0.0000	0.9068
Cellulose	0.0000	0.0000	0.0000	0.0309
Xylan	0.0000	0.0000	0.0000	0.0009
Arabinan	0.0000	0.0000	0.0000	0.0001
Mannan	0.0000	0.0000	0.0000	0.0005
Galacatan	0.0000	0.0000	0.0000	0.0001
Alpha-D-Glucose	0.0000	0.0000	0.0000	0.0000
Xylose	0.0000	0.0000	0.0000	0.0000
Arabinose	0.0000	0.0000	0.0000	0.0000
Mannose	0.0000	0.0000	0.0000	0.0000
Galactose	0.0000	0.0000	0.0000	0.0000
Ethanol	0.0000	0.0000	0.0000	0.0000
HMF	0.0000	0.0000	0.0000	0.0000
Furfural	0.0013	0.0013	0.0000	0.0044
Calcium Sulfate	0.0000	0.0000	0.0000	0.0017
Glycerol	0.0000	0.0000	0.0002	0.0190
Lignin	0.0000	0.0000	0.0000	0.0181
Soluble Solids	0.0000	0.0000	0.0000	0.0042
Ash	0.0000	0.0000	0.0000	0.0002
Cell Mass	0.0000	0.0000	0.8586	0.0113
Sulfuric Acid	0.0000	0.0000	0.0000	0.0000
CalciumHydroxide	0.0000	0.0000	0.0000	0.0000
Cellulase	0.0000	0.0000	0.1412	0.0019
Air	0.8837	0.8837	0.0000	0.0000
Nitrogen	0.0539	0.0539	0.0000	0.0000
Oxygen	0.0000	0.0000	0.0000	0.0000
Carbon Dioxide	0.0244	0.0244	0.0000	0.0000
Acetaldehyde	0.0000	0.0000	0.0000	0.0000
3-Mth-1-Butanol	0.0000	0.0000	0.0000	0.0000
Methane	0.0000	0.0000	0.0000	0.0000
Ammonia	0.0000	0.0000	0.0000	0.0000

FLOW SUMMARIES

Stream No.	3116	3117	3118	3119
Stream Name				
Temp C	30.7374	37.1474	37.1474	57.2015
Pres Pa	108218.5547	108083.9062	108083.9062	108083.9062
Enth kW	-1.8282E+005	-1.9253E+006	-1.9253E+006	-1.9110E+006
Vapor mass fraction	0.316060	0.00000	0.00000	0.0183901
Total kg/h	62520.	481671.	481671.	481671.
Component mass fractions				
Water	0.6310	0.8234	0.8234	0.8234
Cellulose	0.0213	0.0663	0.0663	0.0663
Xylan	0.0006	0.0019	0.0019	0.0019
Arabinan	0.0000	0.0001	0.0001	0.0001
Mannan	0.0003	0.0011	0.0011	0.0011
Galacatan	0.0001	0.0003	0.0003	0.0003
Alpha-D-Glucose	0.0007	0.0022	0.0022	0.0003
Xylose	0.0112	0.0266	0.0266	0.0039
Arabinose	0.0008	0.0020	0.0020	0.0003
Mannose	0.0015	0.0045	0.0045	0.0006
Galactose	0.0004	0.0013	0.0013	0.0002
Ethanol	0.0000	0.0000	0.0000	0.0160
HMF	0.0000	0.0000	0.0000	0.0000
Furfural	0.0034	0.0047	0.0047	0.0047
Calcium Sulfate	0.0012	0.0034	0.0034	0.0034
Glycerol	0.0131	0.0143	0.0143	0.0143
Lignin	0.0125	0.0367	0.0367	0.0367
Soluble Solids	0.0029	0.0086	0.0086	0.0086
Ash	0.0001	0.0003	0.0003	0.0003
Cell Mass	0.0004	0.0011	0.0011	0.0011
Sulfuric Acid	0.0000	0.0000	0.0000	0.0000
CalciumHydroxide	0.0000	0.0000	0.0000	0.0000
Cellulase	0.0013	0.0014	0.0014	0.0014
Air	0.2957	0.0000	0.0000	0.0000
Nitrogen	0.0000	0.0000	0.0000	0.0000
Oxygen	0.0000	0.0000	0.0000	0.0000
Carbon Dioxide	0.0000	0.0000	0.0000	0.0152
Acetaldehyde	0.0000	0.0000	0.0000	0.0000
3-Mth-1-Butanol	0.0000	0.0000	0.0000	0.0000
Methane	0.0000	0.0000	0.0000	0.0000
Ammonia	0.0012	0.0000	0.0000	0.0000

FLOW SUMMARIES

Stream No.	3120	3121	3122	3123
Stream Name				
Temp C	37.0000	20.0000	49.9741	57.2015
Pres Pa	39183.9062	425000.0000	108218.5547	108083.9062
Enth kW	-1.9209E+006	-59.019	-1.8181E+005	-1.9110E+006
Vapor mass fraction	0.0185639	1.0000	0.334116	0.0183901
Total kg/h	481671.	78.	62514.	481671.
Component mass fractions				
Water	0.8234	0.0000	0.6372	0.8234
Cellulose	0.0663	0.0000	0.0213	0.0663
Xylan	0.0019	0.0000	0.0006	0.0019
Arabinan	0.0001	0.0000	0.0000	0.0001
Mannan	0.0011	0.0000	0.0003	0.0011
Galacatan	0.0003	0.0000	0.0001	0.0003
Alpha-D-Glucose	0.0003	0.0000	0.0000	0.0003
Xylose	0.0039	0.0000	0.0000	0.0039
Arabinose	0.0003	0.0000	0.0000	0.0003
Mannose	0.0006	0.0000	0.0000	0.0006
Galactose	0.0002	0.0000	0.0000	0.0002
Ethanol	0.0160	0.0000	0.0000	0.0160
HMF	0.0000	0.0000	0.0000	0.0000
Furfural	0.0047	0.0000	0.0034	0.0047
Calcium Sulfate	0.0034	0.0000	0.0012	0.0034
Glycerol	0.0143	0.0000	0.0131	0.0143
Lignin	0.0367	0.0000	0.0125	0.0367
Soluble Solids	0.0086	0.0000	0.0029	0.0086
Ash	0.0003	0.0000	0.0001	0.0003
Cell Mass	0.0011	0.0000	0.0078	0.0011
Sulfuric Acid	0.0000	0.0000	0.0000	0.0000
CalciumHydroxide	0.0000	0.0000	0.0000	0.0000
Cellulase	0.0014	0.0000	0.0013	0.0014
Air	0.0000	0.0000	0.2738	0.0000
Nitrogen	0.0000	0.0000	0.0167	0.0000
Oxygen	0.0000	0.0000	0.0000	0.0000
Carbon Dioxide	0.0152	0.0000	0.0076	0.0152
Acetaldehyde	0.0000	0.0000	0.0000	0.0000
3-Mth-1-Butanol	0.0000	0.0000	0.0000	0.0000
Methane	0.0000	0.0000	0.0000	0.0000
Ammonia	0.0000	1.0000	0.0000	0.0000

FLOW SUMMARIES

Stream No.	4101	4102	4103	4104
Stream Name				
Temp C	100.4411	35.0000	28.0000	28.0000
Pres Pa	452000.0000	383100.0000	314200.0000	790611.0000
Enth kW	-194.30	-197.74	-198.11	0.166867
Vapor mass fraction	0.00000	0.00000	0.00000	1.0000
Total kg/h	46.	46.	46.	515.
Component mass fractions				
Water	0.9609	0.9604	0.9604	0.0000
Cellulose	0.0005	0.0005	0.0005	0.0000
Xylan	0.0000	0.0000	0.0000	0.0000
Arabinan	0.0000	0.0000	0.0000	0.0000
Mannan	0.0000	0.0000	0.0000	0.0000
Galacatan	0.0000	0.0000	0.0000	0.0000
Alpha-D-Glucose	0.0000	0.0000	0.0000	0.0000
Xylose	0.0060	0.0060	0.0060	0.0000
Arabinose	0.0004	0.0004	0.0004	0.0000
Mannose	0.0000	0.0000	0.0000	0.0000
Galactose	0.0000	0.0000	0.0000	0.0000
Ethanol	0.0000	0.0000	0.0000	0.0000
HMF	0.0000	0.0000	0.0000	0.0000
Furfural	0.0053	0.0051	0.0051	0.0000
Calcium Sulfate	0.0002	0.0002	0.0002	0.0000
Glycerol	0.0216	0.0224	0.0224	0.0000
Lignin	0.0021	0.0021	0.0021	0.0000
Soluble Solids	0.0005	0.0005	0.0005	0.0000
Ash	0.0000	0.0000	0.0000	0.0000
Cell Mass	0.0002	0.0002	0.0002	0.0000
Sulfuric Acid	0.0000	0.0000	0.0000	0.0000
CalciumHydroxide	0.0000	0.0000	0.0000	0.0000
Cellulase	0.0023	0.0022	0.0022	0.0000
Air	0.0000	0.0000	0.0000	1.0000
Nitrogen	0.0000	0.0000	0.0000	0.0000
Oxygen	0.0000	0.0000	0.0000	0.0000
Carbon Dioxide	0.0000	0.0000	0.0000	0.0000
Acetaldehyde	0.0000	0.0000	0.0000	0.0000
3-Mth-1-Butanol	0.0000	0.0000	0.0000	0.0000
Methane	0.0000	0.0000	0.0000	0.0000
Ammonia	0.0000	0.0000	0.0000	0.0000

FLOW SUMMARIES

Stream No.	4105	4106	4107	4108
Stream Name				
Temp C	20.0000	22.6183	44.9379	44.9379
Pres Pa	852000.0000	432000.0000	433798.3125	433798.3125
Enth kW	-19.660	-341.44	-332.81	-332.81
Vapor mass fraction	0.00000	0.879279	0.888288	0.888288
Total kg/h	10.	603.	603.	603.
Component mass fractions				
Water	0.0000	0.1149	0.1149	0.1149
Cellulose	0.0000	0.0036	0.0036	0.0036
Xylan	0.0000	0.0001	0.0001	0.0001
Arabinan	0.0000	0.0000	0.0000	0.0000
Mannan	0.0000	0.0001	0.0001	0.0001
Galacatan	0.0000	0.0000	0.0000	0.0000
Alpha-D-Glucose	1.0000	0.0167	0.0167	0.0167
Xylose	0.0000	0.0019	0.0019	0.0019
Arabinose	0.0000	0.0001	0.0001	0.0001
Mannose	0.0000	0.0003	0.0003	0.0003
Galactose	0.0000	0.0001	0.0001	0.0001
Ethanol	0.0000	0.0000	0.0000	0.0000
HMF	0.0000	0.0000	0.0000	0.0000
Furfural	0.0000	0.0006	0.0006	0.0006
Calcium Sulfate	0.0000	0.0002	0.0002	0.0002
Glycerol	0.0000	0.0024	0.0024	0.0024
Lignin	0.0000	0.0021	0.0021	0.0021
Soluble Solids	0.0000	0.0005	0.0005	0.0005
Ash	0.0000	0.0000	0.0000	0.0000
Cell Mass	0.0000	0.0000	0.0000	0.0000
Sulfuric Acid	0.0000	0.0000	0.0000	0.0000
CalciumHydroxide	0.0000	0.0000	0.0000	0.0000
Cellulase	0.0000	0.0002	0.0002	0.0002
Air	0.0000	0.8540	0.8540	0.8540
Nitrogen	0.0000	0.0000	0.0000	0.0000
Oxygen	0.0000	0.0000	0.0000	0.0000
Carbon Dioxide	0.0000	0.0000	0.0000	0.0000
Acetaldehyde	0.0000	0.0000	0.0000	0.0000
3-Mth-1-Butanol	0.0000	0.0000	0.0000	0.0000
Methane	0.0000	0.0000	0.0000	0.0000
Ammonia	0.0000	0.0021	0.0021	0.0021

FLOW SUMMARIES

Stream No.	4109	4110	4111	4112
Stream Name				
Temp C	67.0654	28.0000	28.0000	28.0000
Pres Pa	433798.3125	433798.3125	108000.0000	108000.0000
Enth kW	-333.96	-355.22	-61.512	-287.61
Vapor mass fraction	0.896410	0.864787	1.0000	0.00000
Total kg/h	603.	603.	530.	74.
Component mass fractions				
Water	0.1242	0.1242	0.0220	0.8588
Cellulose	0.0000	0.0000	0.0000	0.0000
Xylan	0.0001	0.0001	0.0000	0.0008
Arabinan	0.0000	0.0000	0.0000	0.0001
Mannan	0.0000	0.0000	0.0000	0.0000
Galacatan	0.0000	0.0000	0.0000	0.0000
Alpha-D-Glucose	0.0000	0.0000	0.0000	0.0000
Xylose	0.0000	0.0000	0.0000	0.0000
Arabinose	0.0000	0.0000	0.0000	0.0000
Mannose	0.0000	0.0000	0.0000	0.0000
Galactose	0.0000	0.0000	0.0000	0.0000
Ethanol	0.0000	0.0000	0.0000	0.0000
HMF	0.0000	0.0000	0.0000	0.0000
Furfural	0.0006	0.0006	0.0004	0.0021
Calcium Sulfate	0.0002	0.0002	0.0000	0.0016
Glycerol	0.0024	0.0024	0.0000	0.0197
Lignin	0.0021	0.0021	0.0000	0.0174
Soluble Solids	0.0005	0.0005	0.0000	0.0041
Ash	0.0000	0.0000	0.0000	0.0001
Cell Mass	0.0114	0.0114	0.0001	0.0930
Sulfuric Acid	0.0000	0.0000	0.0000	0.0000
CalciumHydroxide	0.0000	0.0000	0.0000	0.0000
Cellulase	0.0002	0.0002	0.0000	0.0019
Air	0.8185	0.8185	0.9325	0.0000
Nitrogen	0.0272	0.0272	0.0310	0.0000
Oxygen	0.0000	0.0000	0.0000	0.0000
Carbon Dioxide	0.0123	0.0123	0.0140	0.0003
Acetaldehyde	0.0000	0.0000	0.0000	0.0000
3-Mth-1-Butanol	0.0000	0.0000	0.0000	0.0000
Methane	0.0000	0.0000	0.0000	0.0000
Ammonia	0.0001	0.0001	0.0001	0.0000

FLOW SUMMARIES

Stream No.	4113	4114	4115	4116
Stream Name				
Temp C	28.0000	28.0000	28.0000	28.0373
Pres Pa	108000.0000	108000.0000	108000.0000	108000.0000
Enth kW	-61.510	-0.0554693	-287.55	-61.567
Vapor mass fraction	1.0000	1.0000	0.00000	1.0000
Total kg/h	530.	0.	74.	530.
Component mass fractions				
Water	0.0220	0.0000	0.8590	0.0220
Cellulose	0.0000	0.0000	0.0000	0.0000
Xylan	0.0000	0.0000	0.0008	0.0000
Arabinan	0.0000	0.0000	0.0001	0.0000
Mannan	0.0000	0.0000	0.0000	0.0000
Galacatan	0.0000	0.0000	0.0000	0.0000
Alpha-D-Glucose	0.0000	0.0000	0.0000	0.0000
Xylose	0.0000	0.0000	0.0000	0.0000
Arabinose	0.0000	0.0000	0.0000	0.0000
Mannose	0.0000	0.0000	0.0000	0.0000
Galactose	0.0000	0.0000	0.0000	0.0000
Ethanol	0.0000	0.0000	0.0000	0.0000
HMF	0.0000	0.0000	0.0000	0.0000
Furfural	0.0004	0.0000	0.0021	0.0004
Calcium Sulfate	0.0000	0.0000	0.0016	0.0000
Glycerol	0.0000	0.0000	0.0197	0.0000
Lignin	0.0000	0.0000	0.0174	0.0000
Soluble Solids	0.0000	0.0000	0.0041	0.0000
Ash	0.0000	0.0000	0.0001	0.0000
Cell Mass	0.0000	0.0000	0.0930	0.0001
Sulfuric Acid	0.0000	0.0000	0.0000	0.0000
CalciumHydroxide	0.0000	0.0000	0.0000	0.0000
Cellulase	0.0000	0.0000	0.0019	0.0000
Air	0.9326	0.0445	0.0000	0.9324
Nitrogen	0.0310	0.0015	0.0000	0.0310
Oxygen	0.0000	0.0000	0.0000	0.0000
Carbon Dioxide	0.0140	0.9541	0.0000	0.0140
Acetaldehyde	0.0000	0.0000	0.0000	0.0000
3-Mth-1-Butanol	0.0000	0.0000	0.0000	0.0000
Methane	0.0000	0.0000	0.0000	0.0000
Ammonia	0.0000	0.0000	0.0000	0.0001

FLOW SUMMARIES

Stream No.	4117	4118	4119	4120
Stream Name				
Temp C	28.0000	100.4411	35.0000	21.3995
Pres Pa	108000.0000	452000.0000	383100.0000	108000.0000
Enth kW	-0.0591201	-63358.	-64481.	-1.0539E+005
Vapor mass fraction	0.722981	0.00000	0.00000	0.552187
Total kg/h	0.	15000.	15000.	53867.
Component mass fractions				
Water	0.0000	0.9609	0.9604	0.4188
Cellulose	0.0000	0.0005	0.0005	0.0130
Xylan	0.0000	0.0000	0.0000	0.0004
Arabinan	0.0000	0.0000	0.0000	0.0000
Mannan	0.0000	0.0000	0.0000	0.0002
Galacatan	0.0000	0.0000	0.0000	0.0001
Alpha-D-Glucose	0.0000	0.0000	0.0000	0.0088
Xylose	0.0000	0.0060	0.0060	0.0070
Arabinose	0.0000	0.0004	0.0004	0.0005
Mannose	0.0000	0.0000	0.0000	0.0009
Galactose	0.0000	0.0000	0.0000	0.0003
Ethanol	0.0000	0.0000	0.0000	0.0000
HMF	0.0000	0.0000	0.0000	0.0000
Furfural	0.0000	0.0053	0.0051	0.0023
Calcium Sulfate	0.0000	0.0002	0.0002	0.0007
Glycerol	0.0000	0.0216	0.0224	0.0088
Lignin	0.0000	0.0021	0.0021	0.0077
Soluble Solids	0.0000	0.0005	0.0005	0.0018
Ash	0.0000	0.0000	0.0000	0.0001
Cell Mass	0.3642	0.0002	0.0002	0.0002
Sulfuric Acid	0.0000	0.0000	0.0000	0.0000
CalciumHydroxide	0.0000	0.0000	0.0000	0.0000
Cellulase	0.0075	0.0023	0.0022	0.0009
Air	0.0000	0.0000	0.0000	0.5255
Nitrogen	0.0000	0.0000	0.0000	0.0000
Oxygen	0.0000	0.0000	0.0000	0.0000
Carbon Dioxide	0.0000	0.0000	0.0000	0.0000
Acetaldehyde	0.0000	0.0000	0.0000	0.0000
3-Mth-1-Butanol	0.0000	0.0000	0.0000	0.0000
Methane	0.0000	0.0000	0.0000	0.0000
Ammonia	0.6283	0.0000	0.0000	0.0021

FLOW SUMMARIES

Stream No.	4121	4122	4123	4124
Stream Name				
Temp C	30.4934	30.4934	37.9038	59.1862
Pres Pa	109652.2656	109652.2656	109652.2656	109652.2656
Enth kW	-1.0486E+005	-1.0486E+005	-1.0498E+005	-1.0564E+005
Vapor mass fraction	0.558254	0.558254	0.563052	0.608772
Total kg/h	53867.	53867.	53864.	53852.
Component mass fractions				
Water	0.4188	0.4188	0.4228	0.4334
Cellulose	0.0130	0.0130	0.0088	0.0000
Xylan	0.0004	0.0004	0.0004	0.0004
Arabinan	0.0000	0.0000	0.0000	0.0000
Mannan	0.0002	0.0002	0.0001	0.0000
Galacatan	0.0001	0.0001	0.0000	0.0000
Alpha-D-Glucose	0.0088	0.0088	0.0059	0.0000
Xylose	0.0070	0.0070	0.0048	0.0000
Arabinose	0.0005	0.0005	0.0004	0.0000
Mannose	0.0009	0.0009	0.0006	0.0000
Galactose	0.0003	0.0003	0.0002	0.0000
Ethanol	0.0000	0.0000	0.0000	0.0000
HMF	0.0000	0.0000	0.0000	0.0000
Furfural	0.0023	0.0023	0.0023	0.0023
Calcium Sulfate	0.0007	0.0007	0.0007	0.0007
Glycerol	0.0088	0.0088	0.0088	0.0088
Lignin	0.0077	0.0077	0.0077	0.0077
Soluble Solids	0.0018	0.0018	0.0018	0.0018
Ash	0.0001	0.0001	0.0001	0.0001
Cell Mass	0.0002	0.0002	0.0052	0.0052
Sulfuric Acid	0.0000	0.0000	0.0000	0.0000
CalciumHydroxide	0.0000	0.0000	0.0000	0.0000
Cellulase	0.0009	0.0009	0.0009	0.0064
Air	0.5255	0.5255	0.5085	0.4432
Nitrogen	0.0000	0.0000	0.0130	0.0630
Oxygen	0.0000	0.0000	0.0000	0.0000
Carbon Dioxide	0.0000	0.0000	0.0058	0.0270
Acetaldehyde	0.0000	0.0000	0.0000	0.0000
3-Mth-1-Butanol	0.0000	0.0000	0.0000	0.0000
Methane	0.0000	0.0000	0.0000	0.0000
Ammonia	0.0021	0.0021	0.0012	0.0000

FLOW SUMMARIES

Stream No.	4125	4126	4127	4128
Stream Name				
Temp C	59.1862	28.0000	28.0000	28.0000
Pres Pa	109652.2656	109652.2656	108000.0000	108000.0000
Enth kW	-1.0564E+005	-1.0878E+005	-5906.2	-1.0286E+005
Vapor mass fraction	0.608772	0.549344	1.0000	0.00000
Total kg/h	53852.	53852.	29345.	24507.
Component mass fractions				
Water	0.4334	0.4334	0.0218	0.9264
Cellulose	0.0000	0.0000	0.0000	0.0000
Xylan	0.0004	0.0004	0.0000	0.0008
Arabinan	0.0000	0.0000	0.0000	0.0001
Mannan	0.0000	0.0000	0.0000	0.0000
Galacatan	0.0000	0.0000	0.0000	0.0000
Alpha-D-Glucose	0.0000	0.0000	0.0000	0.0000
Xylose	0.0000	0.0000	0.0000	0.0000
Arabinose	0.0000	0.0000	0.0000	0.0000
Mannose	0.0000	0.0000	0.0000	0.0000
Galactose	0.0000	0.0000	0.0000	0.0000
Ethanol	0.0000	0.0000	0.0000	0.0000
HMF	0.0000	0.0000	0.0000	0.0000
Furfural	0.0023	0.0023	0.0007	0.0041
Calcium Sulfate	0.0007	0.0007	0.0000	0.0016
Glycerol	0.0088	0.0088	0.0000	0.0193
Lignin	0.0077	0.0077	0.0000	0.0169
Soluble Solids	0.0018	0.0018	0.0000	0.0040
Ash	0.0001	0.0001	0.0000	0.0001
Cell Mass	0.0052	0.0052	0.0000	0.0115
Sulfuric Acid	0.0000	0.0000	0.0000	0.0000
CalciumHydroxide	0.0000	0.0000	0.0000	0.0000
Cellulase	0.0064	0.0064	0.0000	0.0141
Air	0.4432	0.4432	0.8133	0.0000
Nitrogen	0.0630	0.0630	0.1157	0.0000
Oxygen	0.0000	0.0000	0.0000	0.0000
Carbon Dioxide	0.0270	0.0270	0.0485	0.0012
Acetaldehyde	0.0000	0.0000	0.0000	0.0000
3-Mth-1-Butanol	0.0000	0.0000	0.0000	0.0000
Methane	0.0000	0.0000	0.0000	0.0000
Ammonia	0.0000	0.0000	0.0000	0.0000

FLOW SUMMARIES

Stream No.	4129	4130	4131	4132
Stream Name				
Temp C	28.0000	28.0000	28.0000	28.0000
Pres Pa	108000.0000	108000.0000	108000.0000	108000.0000
Enth kW	-0.0922172	-5906.2	-1.0286E+005	-70.107
Vapor mass fraction	0.115219	1.0000	0.00000	1.0000
Total kg/h	1.	29344.	24508.	29.
Component mass fractions				
Water	0.0000	0.0218	0.9263	0.0000
Cellulose	0.0000	0.0000	0.0000	0.0000
Xylan	0.0000	0.0000	0.0008	0.0000
Arabinan	0.0000	0.0000	0.0001	0.0000
Mannan	0.0000	0.0000	0.0000	0.0000
Galacatan	0.0000	0.0000	0.0000	0.0000
Alpha-D-Glucose	0.0000	0.0000	0.0000	0.0000
Xylose	0.0000	0.0000	0.0000	0.0000
Arabinose	0.0000	0.0000	0.0000	0.0000
Mannose	0.0000	0.0000	0.0000	0.0000
Galactose	0.0000	0.0000	0.0000	0.0000
Ethanol	0.0000	0.0000	0.0000	0.0000
HMF	0.0000	0.0000	0.0000	0.0000
Furfural	0.0000	0.0007	0.0041	0.0000
Calcium Sulfate	0.0000	0.0000	0.0016	0.0000
Glycerol	0.0000	0.0000	0.0193	0.0000
Lignin	0.0000	0.0000	0.0169	0.0000
Soluble Solids	0.0000	0.0000	0.0040	0.0000
Ash	0.0000	0.0000	0.0001	0.0000
Cell Mass	0.4037	0.0000	0.0115	0.0000
Sulfuric Acid	0.0000	0.0000	0.0000	0.0000
CalciumHydroxide	0.0000	0.0000	0.0000	0.0000
Cellulase	0.4952	0.0000	0.0141	0.0000
Air	0.0000	0.8133	0.0000	0.0115
Nitrogen	0.0000	0.1157	0.0000	0.0016
Oxygen	0.0000	0.0000	0.0000	0.0000
Carbon Dioxide	0.0000	0.0485	0.0012	0.9868
Acetaldehyde	0.0000	0.0000	0.0000	0.0000
3-Mth-1-Butanol	0.0000	0.0000	0.0000	0.0000
Methane	0.0000	0.0000	0.0000	0.0000
Ammonia	0.1010	0.0000	0.0000	0.0000

FLOW SUMMARIES

Stream No.	4133	4134	4135	5101
Stream Name				
Temp C	28.0000	20.0000	67.0654	28.1319
Pres Pa	108000.0000	425000.0000	433798.3125	520000.0000
Enth kW	-1.0279E+005	-0.939380	-333.96	-20557.
Vapor mass fraction	0.00000	1.0000	0.896410	0.00000
Total kg/h	24479.	1.	603.	4896.
Component mass fractions				
Water	0.9274	0.0000	0.1242	0.9274
Cellulose	0.0000	0.0000	0.0000	0.0000
Xylan	0.0008	0.0000	0.0001	0.0008
Arabinan	0.0001	0.0000	0.0000	0.0001
Mannan	0.0000	0.0000	0.0000	0.0000
Galacatan	0.0000	0.0000	0.0000	0.0000
Alpha-D-Glucose	0.0000	0.0000	0.0000	0.0000
Xylose	0.0000	0.0000	0.0000	0.0000
Arabinose	0.0000	0.0000	0.0000	0.0000
Mannose	0.0000	0.0000	0.0000	0.0000
Galactose	0.0000	0.0000	0.0000	0.0000
Ethanol	0.0000	0.0000	0.0000	0.0000
HMF	0.0000	0.0000	0.0000	0.0000
Furfural	0.0041	0.0000	0.0006	0.0041
Calcium Sulfate	0.0016	0.0000	0.0002	0.0016
Glycerol	0.0194	0.0000	0.0024	0.0194
Lignin	0.0170	0.0000	0.0021	0.0170
Soluble Solids	0.0040	0.0000	0.0005	0.0040
Ash	0.0001	0.0000	0.0000	0.0001
Cell Mass	0.0115	0.0000	0.0114	0.0115
Sulfuric Acid	0.0000	0.0000	0.0000	0.0000
CalciumHydroxide	0.0000	0.0000	0.0000	0.0000
Cellulase	0.0141	0.0000	0.0002	0.0141
Air	0.0000	0.0000	0.8185	0.0000
Nitrogen	0.0000	0.0000	0.0272	0.0000
Oxygen	0.0000	0.0000	0.0000	0.0000
Carbon Dioxide	0.0000	0.0000	0.0123	0.0000
Acetaldehyde	0.0000	0.0000	0.0000	0.0000
3-Mth-1-Butanol	0.0000	0.0000	0.0000	0.0000
Methane	0.0000	0.0000	0.0000	0.0000
Ammonia	0.0000	1.0000	0.0001	0.0000

FLOW SUMMARIES

Stream No.	5102	5103	5104	5105
Stream Name				
Temp C	28.1319	37.7658	37.7658	20.0000
Pres Pa	520000.0000	452999.9688	452999.9688	852000.0000
Enth kW	-82230.	-3.8056E+005	-1.5223E+006	-1.9660E-005
Vapor mass fraction	0.00000	0.00000	0.00000	0.00000
Total kg/h	19583.	94895.	379582.	0.
Component mass fractions				
Water	0.9274	0.8355	0.8355	0.0000
Cellulose	0.0000	0.0673	0.0673	0.0000
Xylan	0.0008	0.0019	0.0019	0.0000
Arabinan	0.0001	0.0001	0.0001	0.0000
Mannan	0.0000	0.0011	0.0011	0.0000
Galacatan	0.0000	0.0003	0.0003	0.0000
Alpha-D-Glucose	0.0000	0.0003	0.0003	1.0000
Xylose	0.0000	0.0039	0.0039	0.0000
Arabinose	0.0000	0.0003	0.0003	0.0000
Mannose	0.0000	0.0007	0.0007	0.0000
Galactose	0.0000	0.0002	0.0002	0.0000
Ethanol	0.0000	0.0161	0.0161	0.0000
HMF	0.0000	0.0000	0.0000	0.0000
Furfural	0.0041	0.0047	0.0047	0.0000
Calcium Sulfate	0.0016	0.0034	0.0034	0.0000
Glycerol	0.0194	0.0145	0.0145	0.0000
Lignin	0.0170	0.0373	0.0373	0.0000
Soluble Solids	0.0040	0.0087	0.0087	0.0000
Ash	0.0001	0.0003	0.0003	0.0000
Cell Mass	0.0115	0.0012	0.0012	0.0000
Sulfuric Acid	0.0000	0.0000	0.0000	0.0000
CalciumHydroxide	0.0000	0.0000	0.0000	0.0000
Cellulase	0.0141	0.0014	0.0014	0.0000
Air	0.0000	0.0000	0.0000	0.0000
Nitrogen	0.0000	0.0000	0.0000	0.0000
Oxygen	0.0000	0.0000	0.0000	0.0000
Carbon Dioxide	0.0000	0.0008	0.0008	0.0000
Acetaldehyde	0.0000	0.0000	0.0000	0.0000
3-Mth-1-Butanol	0.0000	0.0000	0.0000	0.0000
Methane	0.0000	0.0000	0.0000	0.0000
Ammonia	0.0000	0.0000	0.0000	0.0000

FLOW SUMMARIES

Stream No.	5106	5107	5108	5109
Stream Name				
Temp C	28.0000	0.0000	33.9331	37.2032
Pres Pa	791000.0000	0.0000	108000.0000	109069.5000
Enth kW	4.5011	0.00000	-4.0130E+005	-4.0088E+005
Vapor mass fraction	1.0000	0.00000	0.142177	0.143324
Total kg/h	13913.	0.	113944.	113944.
Component mass fractions				
Water	0.0000	0.0000	0.7357	0.7357
Cellulose	0.0000	0.0000	0.0561	0.0561
Xylan	0.0000	0.0000	0.0016	0.0016
Arabinan	0.0000	0.0000	0.0001	0.0001
Mannan	0.0000	0.0000	0.0009	0.0009
Galacatan	0.0000	0.0000	0.0003	0.0003
Alpha-D-Glucose	0.0000	0.0000	0.0003	0.0003
Xylose	0.0000	0.0000	0.0033	0.0033
Arabinose	0.0000	0.0000	0.0002	0.0002
Mannose	0.0000	0.0000	0.0005	0.0005
Galactose	0.0000	0.0000	0.0002	0.0002
Ethanol	0.0000	0.0000	0.0134	0.0134
HMF	0.0000	0.0000	0.0000	0.0000
Furfural	0.0000	0.0000	0.0041	0.0041
Calcium Sulfate	0.0000	0.0000	0.0029	0.0029
Glycerol	0.0000	0.0000	0.0129	0.0129
Lignin	0.0000	0.0000	0.0318	0.0318
Soluble Solids	0.0000	0.0000	0.0074	0.0074
Ash	0.0000	0.0000	0.0003	0.0003
Cell Mass	0.0000	0.0000	0.0015	0.0015
Sulfuric Acid	0.0000	0.0000	0.0000	0.0000
CalciumHydroxide	0.0000	0.0000	0.0000	0.0000
Cellulase	0.0000	0.0000	0.0018	0.0018
Air	1.0000	0.0000	0.1221	0.1221
Nitrogen	0.0000	0.0000	0.0000	0.0000
Oxygen	0.0000	0.0000	0.0000	0.0000
Carbon Dioxide	0.0000	0.0000	0.0007	0.0007
Acetaldehyde	0.0000	0.0000	0.0000	0.0000
3-Mth-1-Butanol	0.0000	0.0000	0.0000	0.0000
Methane	0.0000	0.0000	0.0000	0.0000
Ammonia	0.0000	0.0000	0.0021	0.0021

FLOW SUMMARIES

Stream No.	5110	5111	5112	5113
Stream Name				
Temp C	37.2032	47.6848	47.6848	37.0000
Pres Pa	109069.5000	109069.5000	109069.5000	109069.5000
Enth kW	-4.0088E+005	-4.0093E+005	-4.0093E+005	-4.0239E+005
Vapor mass fraction	0.143324	0.148002	0.148002	0.142743
Total kg/h	113944.	113787.	113787.	113787.
Component mass fractions				
Water	0.7357	0.7402	0.7402	0.7402
Cellulose	0.0561	0.0479	0.0479	0.0479
Xylan	0.0016	0.0016	0.0016	0.0016
Arabinan	0.0001	0.0001	0.0001	0.0001
Mannan	0.0009	0.0008	0.0008	0.0008
Galacatan	0.0003	0.0002	0.0002	0.0002
Alpha-D-Glucose	0.0003	0.0000	0.0000	0.0000
Xylose	0.0033	0.0033	0.0033	0.0033
Arabinose	0.0002	0.0002	0.0002	0.0002
Mannose	0.0005	0.0000	0.0000	0.0000
Galactose	0.0002	0.0000	0.0000	0.0000
Ethanol	0.0134	0.0134	0.0134	0.0134
HMF	0.0000	0.0000	0.0000	0.0000
Furfural	0.0041	0.0041	0.0041	0.0041
Calcium Sulfate	0.0029	0.0029	0.0029	0.0029
Glycerol	0.0129	0.0129	0.0129	0.0129
Lignin	0.0318	0.0318	0.0318	0.0318
Soluble Solids	0.0074	0.0074	0.0074	0.0074
Ash	0.0003	0.0003	0.0003	0.0003
Cell Mass	0.0015	0.0061	0.0061	0.0061
Sulfuric Acid	0.0000	0.0000	0.0000	0.0000
CalciumHydroxide	0.0000	0.0000	0.0000	0.0000
Cellulase	0.0018	0.0018	0.0018	0.0018
Air	0.1221	0.1042	0.1042	0.1042
Nitrogen	0.0000	0.0138	0.0138	0.0138
Oxygen	0.0000	0.0000	0.0000	0.0000
Carbon Dioxide	0.0007	0.0069	0.0069	0.0069
Acetaldehyde	0.0000	0.0000	0.0000	0.0000
3-Mth-1-Butanol	0.0000	0.0000	0.0000	0.0000
Methane	0.0000	0.0000	0.0000	0.0000
Ammonia	0.0021	0.0000	0.0000	0.0000

FLOW SUMMARIES

Stream No.	5114	5115	5116	5117
Stream Name				
Temp C	37.0000	37.0000	37.0000	37.0000
Pres Pa	109069.5000	109069.5000	108000.0000	108000.0000
Enth kW	-4073.6	-3.9831E+005	-7.8309	-3.9831E+005
Vapor mass fraction	1.0000	0.00000	1.0000	0.00000
Total kg/h	14899.	98888.	4.	98883.
Component mass fractions				
Water	0.0356	0.8463	0.0000	0.8464
Cellulose	0.0000	0.0552	0.0000	0.0552
Xylan	0.0000	0.0019	0.0000	0.0019
Arabinan	0.0000	0.0001	0.0000	0.0001
Mannan	0.0000	0.0009	0.0000	0.0009
Galacatan	0.0000	0.0003	0.0000	0.0003
Alpha-D-Glucose	0.0000	0.0000	0.0000	0.0000
Xylose	0.0000	0.0038	0.0000	0.0038
Arabinose	0.0000	0.0003	0.0000	0.0003
Mannose	0.0000	0.0000	0.0000	0.0000
Galactose	0.0000	0.0000	0.0000	0.0000
Ethanol	0.0097	0.0140	0.0000	0.0140
HMF	0.0000	0.0000	0.0000	0.0000
Furfural	0.0014	0.0045	0.0000	0.0045
Calcium Sulfate	0.0000	0.0034	0.0000	0.0034
Glycerol	0.0000	0.0149	0.0000	0.0149
Lignin	0.0000	0.0366	0.0000	0.0366
Soluble Solids	0.0000	0.0085	0.0000	0.0085
Ash	0.0000	0.0003	0.0000	0.0003
Cell Mass	0.0000	0.0071	0.0000	0.0071
Sulfuric Acid	0.0000	0.0000	0.0000	0.0000
CalciumHydroxide	0.0000	0.0000	0.0000	0.0000
Cellulase	0.0000	0.0021	0.0000	0.0021
Air	0.7956	0.0000	0.2440	0.0000
Nitrogen	0.1055	0.0000	0.0324	0.0000
Oxygen	0.0000	0.0000	0.0000	0.0000
Carbon Dioxide	0.0521	0.0000	0.7237	0.0000
Acetaldehyde	0.0000	0.0000	0.0000	0.0000
3-Mth-1-Butanol	0.0000	0.0000	0.0000	0.0000
Methane	0.0000	0.0000	0.0000	0.0000
Ammonia	0.0000	0.0000	0.0000	0.0000

FLOW SUMMARIES

Stream No.	5118	5119	5120	5121
Stream Name				
Temp C	37.0000	37.0000	37.0000	39.9983
Pres Pa	108000.0000	108000.0000	108000.0000	109115.3359
Enth kW	-4099.5	-4081.5	2.5343	-2.0013E+006
Vapor mass fraction	0.998343	1.0000	1.0000	0.00243698
Total kg/h	14117.	14904.	786.	498835.
Component mass fractions				
Water	0.0376	0.0356	0.0000	0.8399
Cellulose	0.0000	0.0000	0.0000	0.0621
Xylan	0.0000	0.0000	0.0000	0.0019
Arabinan	0.0000	0.0000	0.0000	0.0001
Mannan	0.0000	0.0000	0.0000	0.0010
Galacatan	0.0000	0.0000	0.0000	0.0003
Alpha-D-Glucose	0.0000	0.0000	0.0000	0.0002
Xylose	0.0000	0.0000	0.0001	0.0037
Arabinose	0.0000	0.0000	0.0000	0.0003
Mannose	0.0000	0.0000	0.0000	0.0005
Galactose	0.0000	0.0000	0.0000	0.0001
Ethanol	0.0103	0.0097	0.0000	0.0150
HMF	0.0000	0.0000	0.0000	0.0000
Furfural	0.0014	0.0014	0.0000	0.0046
Calcium Sulfate	0.0000	0.0000	0.0000	0.0033
Glycerol	0.0000	0.0000	0.0000	0.0147
Lignin	0.0000	0.0000	0.0000	0.0363
Soluble Solids	0.0000	0.0000	0.0000	0.0085
Ash	0.0000	0.0000	0.0000	0.0003
Cell Mass	0.0000	0.0000	0.0001	0.0027
Sulfuric Acid	0.0000	0.0000	0.0000	0.0000
CalciumHydroxide	0.0000	0.0000	0.0000	0.0000
Cellulase	0.0000	0.0000	0.0000	0.0020
Air	0.8398	0.7955	0.0000	0.0000
Nitrogen	0.0557	0.1055	0.9997	0.0016
Oxygen	0.0000	0.0000	0.0000	0.0000
Carbon Dioxide	0.0552	0.0523	0.0000	0.0006
Acetaldehyde	0.0000	0.0000	0.0000	0.0000
3-Mth-1-Butanol	0.0000	0.0000	0.0000	0.0000
Methane	0.0000	0.0000	0.0000	0.0000
Ammonia	0.0000	0.0000	0.0001	0.0000

FLOW SUMMARIES

Stream No.	5122	5123	5124	5125
Stream Name				
Temp C	39.9983	43.3789	48.1183	37.0000
Pres Pa	109115.3359	109115.3359	109115.3359	109115.3359
Enth kW	-2.0013E+006	-2.0011E+006	-2.0002E+006	-2.0063E+006
Vapor mass fraction	0.00243698	0.00250437	0.0339221	0.0323828
Total kg/h	498835.	498934.	498934.	498934.
Component mass fractions				
Water	0.8399	0.8334	0.8334	0.8334
Cellulose	0.0621	0.0081	0.0081	0.0081
Xylan	0.0019	0.0004	0.0004	0.0004
Arabinan	0.0001	0.0000	0.0000	0.0000
Mannan	0.0010	0.0002	0.0002	0.0002
Galacatan	0.0003	0.0001	0.0001	0.0001
Alpha-D-Glucose	0.0002	0.0603	0.0000	0.0000
Xylose	0.0037	0.0054	0.0054	0.0054
Arabinose	0.0003	0.0004	0.0004	0.0004
Mannose	0.0005	0.0014	0.0000	0.0000
Galactose	0.0001	0.0004	0.0000	0.0000
Ethanol	0.0150	0.0150	0.0431	0.0431
HMF	0.0000	0.0000	0.0000	0.0000
Furfural	0.0046	0.0046	0.0046	0.0046
Calcium Sulfate	0.0033	0.0033	0.0033	0.0033
Glycerol	0.0147	0.0147	0.0196	0.0196
Lignin	0.0363	0.0363	0.0363	0.0363
Soluble Solids	0.0085	0.0085	0.0085	0.0085
Ash	0.0003	0.0003	0.0003	0.0003
Cell Mass	0.0027	0.0027	0.0039	0.0039
Sulfuric Acid	0.0000	0.0000	0.0000	0.0000
CalciumHydroxide	0.0000	0.0000	0.0000	0.0000
Cellulase	0.0020	0.0020	0.0020	0.0020
Air	0.0000	0.0000	0.0000	0.0000
Nitrogen	0.0016	0.0016	0.0016	0.0016
Oxygen	0.0000	0.0000	0.0001	0.0001
Carbon Dioxide	0.0006	0.0006	0.0286	0.0286
Acetaldehyde	0.0000	0.0000	0.0001	0.0001
3-Mth-1-Butanol	0.0000	0.0000	0.0000	0.0000
Methane	0.0000	0.0000	0.0000	0.0000
Ammonia	0.0000	0.0002	0.0000	0.0000

FLOW SUMMARIES

Stream No.	5126	5127	5128	5129
Stream Name				
Temp C	37.0000	37.0000	37.0000	37.0000
Pres Pa	109115.3359	109115.3359	108000.0000	108000.0000
Enth kW	-36243.	-1.9700E+006	-0.147191	-1.9700E+006
Vapor mass fraction	1.0000	0.00000	0.0905251	2.3747E-006
Total kg/h	15386.	483548.	0.	483548.
Component mass fractions				
Water	0.0245	0.8592	0.0000	0.8592
Cellulose	0.0000	0.0083	0.0000	0.0083
Xylan	0.0000	0.0004	0.0000	0.0004
Arabinan	0.0000	0.0000	0.0000	0.0000
Mannan	0.0000	0.0002	0.0000	0.0002
Galacatan	0.0000	0.0001	0.0000	0.0001
Alpha-D-Glucose	0.0000	0.0000	0.0000	0.0000
Xylose	0.0000	0.0056	0.4316	0.0056
Arabinose	0.0000	0.0004	0.0000	0.0004
Mannose	0.0000	0.0000	0.0000	0.0000
Galactose	0.0000	0.0000	0.0000	0.0000
Ethanol	0.0187	0.0438	0.0000	0.0438
HMF	0.0000	0.0000	0.0000	0.0000
Furfural	0.0009	0.0048	0.0000	0.0048
Calcium Sulfate	0.0000	0.0034	0.0000	0.0034
Glycerol	0.0000	0.0202	0.0003	0.0202
Lignin	0.0000	0.0374	0.0000	0.0374
Soluble Solids	0.0000	0.0087	0.0000	0.0087
Ash	0.0000	0.0003	0.0000	0.0003
Cell Mass	0.0000	0.0040	0.3125	0.0040
Sulfuric Acid	0.0000	0.0000	0.0000	0.0000
CalciumHydroxide	0.0000	0.0000	0.0000	0.0000
Cellulase	0.0000	0.0021	0.1629	0.0021
Air	0.0000	0.0000	0.0000	0.0000
Nitrogen	0.0511	0.0000	0.0000	0.0000
Oxygen	0.0028	0.0000	0.0000	0.0000
Carbon Dioxide	0.9017	0.0009	0.0000	0.0009
Acetaldehyde	0.0003	0.0001	0.0000	0.0001
3-Mth-1-Butanol	0.0000	0.0000	0.0000	0.0000
Methane	0.0000	0.0000	0.0000	0.0000
Ammonia	0.0000	0.0000	0.0927	0.0000

FLOW SUMMARIES

Stream No.	5130	5131	5132	5133
Stream Name				
Temp C	37.0000	37.0000	37.0000	20.0000
Pres Pa	108000.0000	108000.0000	108000.0000	452000.0000
Enth kW	0.00193377	-36243.	-1.9700E+006	-181.63
Vapor mass fraction	1.0000	1.0000	0.00000	1.0000
Total kg/h	1.	15386.	483548.	240.
Component mass fractions				
Water	0.0000	0.0245	0.8592	0.0000
Cellulose	0.0000	0.0000	0.0083	0.0000
Xylan	0.0000	0.0000	0.0004	0.0000
Arabinan	0.0000	0.0000	0.0000	0.0000
Mannan	0.0000	0.0000	0.0002	0.0000
Galacatan	0.0000	0.0000	0.0001	0.0000
Alpha-D-Glucose	0.0000	0.0000	0.0000	0.0000
Xylose	0.0000	0.0000	0.0056	0.0000
Arabinose	0.0000	0.0000	0.0004	0.0000
Mannose	0.0000	0.0000	0.0000	0.0000
Galactose	0.0000	0.0000	0.0000	0.0000
Ethanol	0.0000	0.0187	0.0438	0.0000
HMF	0.0000	0.0000	0.0000	0.0000
Furfural	0.0000	0.0009	0.0048	0.0000
Calcium Sulfate	0.0000	0.0000	0.0034	0.0000
Glycerol	0.0000	0.0000	0.0202	0.0000
Lignin	0.0000	0.0000	0.0374	0.0000
Soluble Solids	0.0000	0.0000	0.0087	0.0000
Ash	0.0000	0.0000	0.0003	0.0000
Cell Mass	0.0000	0.0000	0.0040	0.0000
Sulfuric Acid	0.0000	0.0000	0.0000	0.0000
CalciumHydroxide	0.0000	0.0000	0.0000	0.0000
Cellulase	0.0000	0.0000	0.0021	0.0000
Air	0.0000	0.0000	0.0000	0.0000
Nitrogen	0.9019	0.0511	0.0000	0.0000
Oxygen	0.0981	0.0028	0.0000	0.0000
Carbon Dioxide	0.0000	0.9017	0.0009	0.0000
Acetaldehyde	0.0000	0.0003	0.0001	0.0000
3-Mth-1-Butanol	0.0000	0.0000	0.0000	0.0000
Methane	0.0000	0.0000	0.0000	0.0000
Ammonia	0.0000	0.0000	0.0000	1.0000

FLOW SUMMARIES

Stream No.	5134	5135	5136	6101
Stream Name				
Temp C	20.0000	40.0616	48.1183	87.3270
Pres Pa	452000.0000	109115.3359	109115.3359	94200.0000
Enth kW	-75.262	-2.0014E+006	-2.0002E+006	-77038.
Vapor mass fraction	1.0000	0.00244271	0.0339221	0.00000
Total kg/h	100.	498934.	498934.	18256.
Component mass fractions				
Water	0.0000	0.8398	0.8334	0.9687
Cellulose	0.0000	0.0621	0.0081	0.0000
Xylan	0.0000	0.0019	0.0004	0.0000
Arabinan	0.0000	0.0001	0.0000	0.0000
Mannan	0.0000	0.0010	0.0002	0.0000
Galacatan	0.0000	0.0003	0.0001	0.0000
Alpha-D-Glucose	0.0000	0.0002	0.0000	0.0000
Xylose	0.0000	0.0037	0.0054	0.0000
Arabinose	0.0000	0.0003	0.0004	0.0000
Mannose	0.0000	0.0005	0.0000	0.0000
Galactose	0.0000	0.0001	0.0000	0.0000
Ethanol	0.0000	0.0150	0.0431	0.0000
HMF	0.0000	0.0000	0.0000	0.0016
Furfural	0.0000	0.0046	0.0046	0.0297
Calcium Sulfate	0.0000	0.0033	0.0033	0.0000
Glycerol	0.0000	0.0147	0.0196	0.0000
Lignin	0.0000	0.0363	0.0363	0.0000
Soluble Solids	0.0000	0.0085	0.0085	0.0000
Ash	0.0000	0.0003	0.0003	0.0000
Cell Mass	0.0000	0.0027	0.0039	0.0000
Sulfuric Acid	0.0000	0.0000	0.0000	0.0000
CalciumHydroxide	0.0000	0.0000	0.0000	0.0000
Cellulase	0.0000	0.0020	0.0020	0.0000
Air	0.0000	0.0000	0.0000	0.0000
Nitrogen	0.0000	0.0016	0.0016	0.0000
Oxygen	0.0000	0.0000	0.0001	0.0000
Carbon Dioxide	0.0000	0.0006	0.0286	0.0000
Acetaldehyde	0.0000	0.0000	0.0001	0.0000
3-Mth-1-Butanol	0.0000	0.0000	0.0000	0.0000
Methane	0.0000	0.0000	0.0000	0.0000
Ammonia	1.0000	0.0002	0.0000	0.0000

FLOW SUMMARIES

Stream No.	6102	6103	6104	6105
Stream Name				
Temp C	59.2772	100.0000	100.0000	100.0000
Pres Pa	451100.0000	382200.0000	382200.0000	382200.0000
Enth kW	-1.9585E+006	-1.9373E+006	-867.52	-1.9364E+006
Vapor mass fraction	0.00000	0.000742294	1.0000	0.00000
Total kg/h	483548.	483548.	341.	483206.
Component mass fractions				
Water	0.8592	0.8592	0.1243	0.8597
Cellulose	0.0083	0.0083	0.0000	0.0083
Xylan	0.0004	0.0004	0.0000	0.0004
Arabinan	0.0000	0.0000	0.0000	0.0000
Mannan	0.0002	0.0002	0.0000	0.0002
Galacatan	0.0001	0.0001	0.0000	0.0001
Alpha-D-Glucose	0.0000	0.0000	0.0000	0.0000
Xylose	0.0056	0.0056	0.0000	0.0056
Arabinose	0.0004	0.0004	0.0000	0.0004
Mannose	0.0000	0.0000	0.0000	0.0000
Galactose	0.0000	0.0000	0.0000	0.0000
Ethanol	0.0438	0.0438	0.0643	0.0438
HMF	0.0000	0.0000	0.0000	0.0000
Furfural	0.0048	0.0048	0.0031	0.0048
Calcium Sulfate	0.0034	0.0034	0.0000	0.0034
Glycerol	0.0202	0.0202	0.0000	0.0202
Lignin	0.0374	0.0374	0.0000	0.0375
Soluble Solids	0.0087	0.0087	0.0000	0.0087
Ash	0.0003	0.0003	0.0000	0.0003
Cell Mass	0.0040	0.0040	0.0000	0.0040
Sulfuric Acid	0.0000	0.0000	0.0000	0.0000
CalciumHydroxide	0.0000	0.0000	0.0000	0.0000
Cellulase	0.0021	0.0021	0.0000	0.0021
Air	0.0000	0.0000	0.0000	0.0000
Nitrogen	0.0000	0.0000	0.0000	0.0000
Oxygen	0.0000	0.0000	0.0000	0.0000
Carbon Dioxide	0.0009	0.0009	0.8078	0.0003
Acetaldehyde	0.0001	0.0001	0.0004	0.0001
3-Mth-1-Butanol	0.0000	0.0000	0.0001	0.0000
Methane	0.0000	0.0000	0.0000	0.0000
Ammonia	0.0000	0.0000	0.0000	0.0000

FLOW SUMMARIES

Stream No.	6106	6107	6108	6109
Stream Name				
Temp C	100.0000	100.0000	106.0000	37.5636
Pres Pa	126626.0000	126626.0000	126626.0000	108000.0000
Enth kW	-1.8513E+006	-85112.	-85083.	-59209.
Vapor mass fraction	0.00000	0.00000	0.00000	0.999398
Total kg/h	448694.	34359.	34359.	37039.
Component mass fractions				
Water	0.9258	0.0000	0.0000	0.0306
Cellulose	0.0000	0.1173	0.1173	0.0000
Xylan	0.0000	0.0054	0.0054	0.0000
Arabinan	0.0000	0.0004	0.0004	0.0000
Mannan	0.0000	0.0029	0.0029	0.0000
Galacatan	0.0000	0.0008	0.0008	0.0000
Alpha-D-Glucose	0.0000	0.0000	0.0000	0.0000
Xylose	0.0000	0.0784	0.0784	0.0000
Arabinose	0.0000	0.0059	0.0059	0.0000
Mannose	0.0000	0.0000	0.0000	0.0000
Galactose	0.0000	0.0000	0.0000	0.0000
Ethanol	0.0472	0.0000	0.0000	0.0138
HMF	0.0000	0.0000	0.0000	0.0000
Furfural	0.0051	0.0000	0.0000	0.0011
Calcium Sulfate	0.0000	0.0485	0.0485	0.0000
Glycerol	0.0218	0.0000	0.0000	0.0000
Lignin	0.0000	0.5267	0.5267	0.0000
Soluble Solids	0.0000	0.1229	0.1229	0.0000
Ash	0.0000	0.0044	0.0044	0.0000
Cell Mass	0.0000	0.0568	0.0568	0.0000
Sulfuric Acid	0.0000	0.0000	0.0000	0.0000
CalciumHydroxide	0.0000	0.0001	0.0001	0.0000
Cellulase	0.0000	0.0296	0.0296	0.0000
Air	0.0000	0.0000	0.0000	0.3201
Nitrogen	0.0000	0.0000	0.0000	0.0424
Oxygen	0.0000	0.0000	0.0000	0.0012
Carbon Dioxide	0.0000	0.0000	0.0000	0.5906
Acetaldehyde	0.0001	0.0000	0.0000	0.0001
3-Mth-1-Butanol	0.0000	0.0000	0.0000	0.0000
Methane	0.0000	0.0000	0.0000	0.0000
Ammonia	0.0000	0.0000	0.0000	0.0000

FLOW SUMMARIES

Stream No.	6110	6208	6301 (cent. feed (bottoms))	6302
Stream Name				
Temp C	100.0000	114.5000	101.9011	100.0000
Pres Pa	126626.0000	623000.0000	108000.0000	126626.0000
Enth kW	-1.8511E+006	-45366.	-1.9251E+006	-353.88
Vapor mass fraction	0.00285547	0.00000	0.0210843	1.0000
Total kg/h	448847.	11419.	467949.	153.
Component mass fractions				
Water	0.9255	0.9115	0.9028	0.0000
Cellulose	0.0000	0.0000	0.0086	0.0000
Xylan	0.0000	0.0000	0.0004	0.0000
Arabinan	0.0000	0.0000	0.0000	0.0000
Mannan	0.0000	0.0000	0.0002	0.0000
Galacatan	0.0000	0.0000	0.0001	0.0000
Alpha-D-Glucose	0.0000	0.0000	0.0000	0.0000
Xylose	0.0000	0.0000	0.0058	0.0000
Arabinose	0.0000	0.0000	0.0004	0.0000
Mannose	0.0000	0.0000	0.0000	0.0000
Galactose	0.0000	0.0000	0.0000	0.0000
Ethanol	0.0472	0.0000	0.0000	0.0000
HMF	0.0000	0.0000	0.0000	0.0000
Furfural	0.0051	0.0885	0.0029	0.0000
Calcium Sulfate	0.0000	0.0000	0.0036	0.0000
Glycerol	0.0218	0.0000	0.0209	0.0000
Lignin	0.0000	0.0000	0.0387	0.0000
Soluble Solids	0.0000	0.0000	0.0090	0.0000
Ash	0.0000	0.0000	0.0003	0.0000
Cell Mass	0.0000	0.0000	0.0042	0.0000
Sulfuric Acid	0.0000	0.0000	0.0000	0.0000
CalciumHydroxide	0.0000	0.0000	0.0000	0.0000
Cellulase	0.0000	0.0000	0.0022	0.0000
Air	0.0000	0.0000	0.0000	0.0000
Nitrogen	0.0000	0.0000	0.0000	0.0000
Oxygen	0.0000	0.0000	0.0000	0.0000
Carbon Dioxide	0.0003	0.0000	0.0000	0.9019
Acetaldehyde	0.0001	0.0000	0.0000	0.0000
3-Mth-1-Butanol	0.0000	0.0000	0.0000	0.0981
Methane	0.0000	0.0000	0.0000	0.0000
Ammonia	0.0000	0.0000	0.0000	0.0000

FLOW SUMMARIES

effluent

Stream No.	6303	6304	6305	6306
Stream Name				
Temp C	100.0000	100.1007	100.4411	81.7201
Pres Pa	108000.0000	452000.0000	452000.0000	452000.0000
Enth kW	-1.7979E+006	-1.7979E+006	-1.8432E+006	-4.2838
Vapor mass fraction	0.00000	0.00000	0.00000	0.00000
Total kg/h	424963.	424963.	436382.	1.
Component mass fractions				
Water	0.9622	0.9622	0.9609	0.9740
Cellulose	0.0005	0.0005	0.0005	0.0003
Xylan	0.0000	0.0000	0.0000	0.0000
Arabinan	0.0000	0.0000	0.0000	0.0000
Mannan	0.0000	0.0000	0.0000	0.0000
Galacatan	0.0000	0.0000	0.0000	0.0000
Alpha-D-Glucose	0.0000	0.0000	0.0000	0.0000
Xylose	0.0061	0.0061	0.0060	0.0037
Arabinose	0.0005	0.0005	0.0004	0.0003
Mannose	0.0000	0.0000	0.0000	0.0000
Galactose	0.0000	0.0000	0.0000	0.0000
Ethanol	0.0000	0.0000	0.0000	0.0000
HMF	0.0000	0.0000	0.0000	0.0000
Furfural	0.0030	0.0030	0.0053	0.0011
Calcium Sulfate	0.0002	0.0002	0.0002	0.0003
Glycerol	0.0222	0.0222	0.0216	0.0173
Lignin	0.0021	0.0021	0.0021	0.0015
Soluble Solids	0.0005	0.0005	0.0005	0.0003
Ash	0.0000	0.0000	0.0000	0.0000
Cell Mass	0.0002	0.0002	0.0002	0.0002
Sulfuric Acid	0.0000	0.0000	0.0000	0.0000
CalciumHydroxide	0.0000	0.0000	0.0000	0.0000
Cellulase	0.0024	0.0024	0.0023	0.0008
Air	0.0000	0.0000	0.0000	0.0000
Nitrogen	0.0000	0.0000	0.0000	0.0000
Oxygen	0.0000	0.0000	0.0000	0.0000
Carbon Dioxide	0.0000	0.0000	0.0000	0.0000
Acetaldehyde	0.0000	0.0000	0.0000	0.0000
3-Mth-1-Butanol	0.0000	0.0000	0.0000	0.0000
Methane	0.0000	0.0000	0.0000	0.0000
Ammonia	0.0000	0.0000	0.0000	0.0000

FLOW SUMMARIES

solids

Stream No.	6307	6308	8101	8102
Stream Name				
Temp C	65.5107	100.0000	87.3783	20.0000
Pres Pa	452000.0000	108000.0000	194200.0000	452000.0000
Enth kW	-12.952	-1.3403E+005	-77037.	-98.243
Vapor mass fraction	0.00000	0.00000	0.00000	1.0000
Total kg/h	3.	42986.	18256.	130.
Component mass fractions				
Water	0.9803	0.3160	0.9687	0.0000
Cellulose	0.0003	0.0891	0.0000	0.0000
Xylan	0.0000	0.0041	0.0000	0.0000
Arabinan	0.0000	0.0003	0.0000	0.0000
Mannan	0.0000	0.0022	0.0000	0.0000
Galacatan	0.0000	0.0006	0.0000	0.0000
Alpha-D-Glucose	0.0000	0.0000	0.0000	0.0000
Xylose	0.0028	0.0021	0.0000	0.0000
Arabinose	0.0002	0.0002	0.0000	0.0000
Mannose	0.0000	0.0000	0.0000	0.0000
Galactose	0.0000	0.0000	0.0000	0.0000
Ethanol	0.0000	0.0000	0.0000	0.0000
HMF	0.0000	0.0000	0.0016	0.0000
Furfural	0.0008	0.0011	0.0297	0.0000
Calcium Sulfate	0.0002	0.0368	0.0000	0.0000
Glycerol	0.0131	0.0077	0.0000	0.0000
Lignin	0.0011	0.4000	0.0000	0.0000
Soluble Solids	0.0003	0.0933	0.0000	0.0000
Ash	0.0000	0.0033	0.0000	0.0000
Cell Mass	0.0002	0.0431	0.0000	0.0000
Sulfuric Acid	0.0000	0.0000	0.0000	0.0000
CalciumHydroxide	0.0000	0.0001	0.0000	0.0000
Cellulase	0.0006	0.0000	0.0000	0.0000
Air	0.0000	0.0000	0.0000	0.0000
Nitrogen	0.0000	0.0000	0.0000	0.0000
Oxygen	0.0000	0.0000	0.0000	0.0000
Carbon Dioxide	0.0000	0.0000	0.0000	0.0000
Acetaldehyde	0.0000	0.0000	0.0000	0.0000
3-Mth-1-Butanol	0.0000	0.0000	0.0000	0.0000
Methane	0.0000	0.0000	0.0000	0.0000
Ammonia	0.0000	0.0000	0.0000	1.0000

FLOW SUMMARIES

Stream No.	8103	8104	8105	8106
Stream Name				
Temp C	98.6932	98.8487	35.0000	35.0000
Pres Pa	108000.0000	411000.0000	342100.0312	342100.0312
Enth kW	-5.3304E+005	-5.3303E+005	-5.4229E+005	-5.3815E+005
Vapor mass fraction	0.000129019	0.00000	0.00000	0.0416084
Total kg/h	126322.	126322.	126322.	126321.
Component mass fractions				
Water	0.9610	0.9610	0.9610	0.9514
Cellulose	0.0004	0.0004	0.0004	0.0000
Xylan	0.0000	0.0000	0.0000	0.0000
Arabinan	0.0000	0.0000	0.0000	0.0000
Mannan	0.0000	0.0000	0.0000	0.0000
Galacatan	0.0000	0.0000	0.0000	0.0000
Alpha-D-Glucose	0.0000	0.0000	0.0000	0.0000
Xylose	0.0051	0.0051	0.0051	0.0005
Arabinose	0.0004	0.0004	0.0004	0.0000
Mannose	0.0000	0.0000	0.0000	0.0000
Galactose	0.0000	0.0000	0.0000	0.0000
Ethanol	0.0000	0.0000	0.0000	0.0000
HMF	0.0002	0.0002	0.0002	0.0000
Furfural	0.0088	0.0088	0.0088	0.0009
Calcium Sulfate	0.0002	0.0002	0.0002	0.0002
Glycerol	0.0185	0.0185	0.0185	0.0018
Lignin	0.0018	0.0018	0.0018	0.0018
Soluble Solids	0.0004	0.0004	0.0004	0.0000
Ash	0.0000	0.0000	0.0000	0.0000
Cell Mass	0.0002	0.0002	0.0002	0.0002
Sulfuric Acid	0.0000	0.0000	0.0000	0.0000
CalciumHydroxide	0.0000	0.0000	0.0000	0.0000
Cellulase	0.0020	0.0020	0.0020	0.0002
Air	0.0000	0.0000	0.0000	0.0000
Nitrogen	0.0000	0.0000	0.0000	0.0003
Oxygen	0.0000	0.0000	0.0000	0.0102
Carbon Dioxide	0.0000	0.0000	0.0000	0.0178
Acetaldehyde	0.0000	0.0000	0.0000	0.0000
3-Mth-1-Butanol	0.0000	0.0000	0.0000	0.0000
Methane	0.0000	0.0000	0.0000	0.0135
Ammonia	0.0010	0.0010	0.0010	0.0010

FLOW SUMMARIES

Stream No.	8107	8108	8109	8110
Stream Name				
Temp C	35.0000	35.0000	35.0000	35.0000
Pres Pa	342100.0312	342100.0312	101000.0000	101000.0000
Enth kW	-5.3743E+005	-5.3743E+005	-5.3106E+005	-6280.6
Vapor mass fraction	0.0338167	0.0338167	0.00000	1.0000
Total kg/h	126321.	126321.	121863.	4458.
Component mass fractions				
Water	0.9541	0.9541	0.9876	0.0395
Cellulose	0.0000	0.0000	0.0000	0.0000
Xylan	0.0000	0.0000	0.0000	0.0000
Arabinan	0.0000	0.0000	0.0000	0.0000
Mannan	0.0000	0.0000	0.0000	0.0000
Galacatan	0.0000	0.0000	0.0000	0.0000
Alpha-D-Glucose	0.0000	0.0000	0.0000	0.0000
Xylose	0.0005	0.0005	0.0005	0.0000
Arabinose	0.0000	0.0000	0.0000	0.0000
Mannose	0.0000	0.0000	0.0000	0.0000
Galactose	0.0000	0.0000	0.0000	0.0000
Ethanol	0.0000	0.0000	0.0000	0.0000
HMF	0.0000	0.0000	0.0000	0.0005
Furfural	0.0009	0.0009	0.0009	0.0003
Calcium Sulfate	0.0002	0.0002	0.0002	0.0000
Glycerol	0.0018	0.0018	0.0019	0.0000
Lignin	0.0018	0.0018	0.0018	0.0000
Soluble Solids	0.0000	0.0000	0.0000	0.0000
Ash	0.0000	0.0000	0.0000	0.0000
Cell Mass	0.0063	0.0063	0.0065	0.0000
Sulfuric Acid	0.0000	0.0000	0.0000	0.0000
CalciumHydroxide	0.0000	0.0000	0.0000	0.0000
Cellulase	0.0002	0.0002	0.0002	0.0000
Air	0.0000	0.0000	0.0000	0.0000
Nitrogen	0.0003	0.0003	0.0000	0.0091
Oxygen	0.0102	0.0102	0.0000	0.2888
Carbon Dioxide	0.0123	0.0123	0.0002	0.3426
Acetaldehyde	0.0000	0.0000	0.0000	0.0000
3-Mth-1-Butanol	0.0000	0.0000	0.0000	0.0000
Methane	0.0113	0.0113	0.0000	0.3192
Ammonia	0.0000	0.0000	0.0000	0.0000

FLOW SUMMARIES

Stream No.	8201	8203	8204	8205
Stream Name				
Temp C	20.0000	34.9313	51.6439	51.6439
Pres Pa	404000.0000	102000.0000	102000.0000	102000.0000
Enth kW	-1.1835	-5.3105E+005	-5.3108E+005	-5.3108E+005
Vapor mass fraction	1.0000	0.00650847	0.00868872	0.00868872
Total kg/h	750.	122613.	122712.	122712.
Component mass fractions				
Water	0.0000	0.9815	0.9830	0.9830
Cellulose	0.0000	0.0000	0.0000	0.0000
Xylan	0.0000	0.0000	0.0000	0.0000
Arabinan	0.0000	0.0000	0.0000	0.0000
Mannan	0.0000	0.0000	0.0000	0.0000
Galacatan	0.0000	0.0000	0.0000	0.0000
Alpha-D-Glucose	0.0000	0.0000	0.0000	0.0000
Xylose	0.0000	0.0005	0.0000	0.0000
Arabinose	0.0000	0.0000	0.0000	0.0000
Mannose	0.0000	0.0000	0.0000	0.0000
Galactose	0.0000	0.0000	0.0000	0.0000
Ethanol	0.0000	0.0000	0.0000	0.0000
HMF	0.0000	0.0000	0.0000	0.0000
Furfural	0.0000	0.0009	0.0000	0.0000
Calcium Sulfate	0.0000	0.0002	0.0002	0.0002
Glycerol	0.0000	0.0019	0.0000	0.0000
Lignin	0.0000	0.0018	0.0018	0.0018
Soluble Solids	0.0000	0.0000	0.0000	0.0000
Ash	0.0000	0.0000	0.0000	0.0000
Cell Mass	0.0000	0.0065	0.0064	0.0064
Sulfuric Acid	0.0000	0.0000	0.0000	0.0000
CalciumHydroxide	0.0000	0.0000	0.0000	0.0000
Cellulase	0.0000	0.0002	0.0000	0.0000
Air	0.0000	0.0000	0.0000	0.0000
Nitrogen	0.0000	0.0000	0.0000	0.0000
Oxygen	1.0000	0.0061	0.0021	0.0021
Carbon Dioxide	0.0000	0.0002	0.0064	0.0064
Acetaldehyde	0.0000	0.0000	0.0000	0.0000
3-Mth-1-Butanol	0.0000	0.0000	0.0000	0.0000
Methane	0.0000	0.0000	0.0000	0.0000
Ammonia	0.0000	0.0000	0.0000	0.0000

FLOW SUMMARIES

Stream No.	8206	8207	8208
Stream Name			
Temp C	20.0000	20.0000	20.0000
Pres Pa	102000.0000	102000.0000	102000.0000
Enth kW	-157.55	-5.3546E+005	-5.2928E+005
Vapor mass fraction	1.0000	0.00000	0.00000
Total kg/h	309.	122402.	120211.
Component mass fractions			
Water	0.0125	0.9855	0.9934
Cellulose	0.0000	0.0000	0.0000
Xylan	0.0000	0.0000	0.0000
Arabinan	0.0000	0.0000	0.0000
Mannan	0.0000	0.0000	0.0000
Galacatan	0.0000	0.0000	0.0000
Alpha-D-Glucose	0.0000	0.0000	0.0000
Xylose	0.0000	0.0000	0.0000
Arabinose	0.0000	0.0000	0.0000
Mannose	0.0000	0.0000	0.0000
Galactose	0.0000	0.0000	0.0000
Ethanol	0.0000	0.0000	0.0000
HMF	0.0000	0.0000	0.0000
Furfural	0.0000	0.0000	0.0000
Calcium Sulfate	0.0000	0.0002	0.0000
Glycerol	0.0000	0.0000	0.0000
Lignin	0.0000	0.0018	0.0001
Soluble Solids	0.0000	0.0000	0.0000
Ash	0.0000	0.0000	0.0000
Cell Mass	0.0000	0.0065	0.0003
Sulfuric Acid	0.0000	0.0000	0.0000
CalciumHydroxide	0.0000	0.0000	0.0000
Cellulase	0.0000	0.0000	0.0000
Air	0.0000	0.0000	0.0000
Nitrogen	0.0000	0.0000	0.0000
Oxygen	0.7998	0.0000	0.0000
Carbon Dioxide	0.1839	0.0060	0.0061
Acetaldehyde	0.0000	0.0000	0.0000
3-Mth-1-Butanol	0.0000	0.0000	0.0000
Methane	0.0036	0.0000	0.0000
Ammonia	0.0002	0.0000	0.0000

HEATING CURVES SUMMARY

Eqp # 18 Unit type : HTXR Unit name: TT-220

Stream 2205

NP	Temp C	Pres Pa	Del H kW	Vapor kg/h	Liquid kg/h	Vap mole frac.	Vap mass frac.
1	102.1	522000.0	3.12E+004	0	467423	0.0000	0.0000
2	98.7	518373.7	2.96E+004	0	467423	0.0000	0.0000
3	95.3	514747.4	2.79E+004	0	467423	0.0000	0.0000
4	91.8	511121.1	2.63E+004	0	467423	0.0000	0.0000
5	88.4	507494.7	2.46E+004	0	467423	0.0000	0.0000
6	85.0	503868.4	2.30E+004	0	467423	0.0000	0.0000
7	81.6	500242.1	2.13E+004	0	467423	0.0000	0.0000
8	78.1	496615.8	1.97E+004	0	467423	0.0000	0.0000
9	74.7	492989.5	1.80E+004	0	467423	0.0000	0.0000
10	71.3	489363.2	1.64E+004	0	467423	0.0000	0.0000
11	67.8	485736.9	1.47E+004	0	467423	0.0000	0.0000
12	64.4	482110.5	1.31E+004	0	467423	0.0000	0.0000
13	61.0	478484.2	1.15E+004	0	467423	0.0000	0.0000
14	57.6	474857.9	9.81E+003	0	467423	0.0000	0.0000
15	54.1	471231.6	8.18E+003	0	467423	0.0000	0.0000
16	50.7	467605.3	6.54E+003	0	467423	0.0000	0.0000
17	47.3	463979.0	4.90E+003	0	467423	0.0000	0.0000
18	43.9	460352.6	3.27E+003	0	467423	0.0000	0.0000
19	40.4	456726.3	1.63E+003	0	467423	0.0000	0.0000
20	37.0	453100.0	0.000	0	467423	0.0000	0.0000

Eqp # 20 Unit type : HTXR Unit name: TT-301A

Stream 3101

NP	Temp C	Pres Pa	Del H kW	Vapor kg/h	Liquid kg/h	Vap mole frac.	Vap mass frac.
1	100.4	452000.0	1.82E+003	0	25000	0.0000	0.0000
2	97.1	448373.7	1.73E+003	0	25000	0.0000	0.0000
3	93.8	444747.4	1.63E+003	0	25000	0.0000	0.0000
4	90.4	441121.0	1.53E+003	0	25000	0.0000	0.0000
5	87.1	437494.7	1.44E+003	0	25000	0.0000	0.0000
6	83.7	433868.4	1.34E+003	0	25000	0.0000	0.0000
7	80.4	430242.1	1.24E+003	0	25000	0.0000	0.0000
8	77.1	426615.8	1.15E+003	0	25000	0.0000	0.0000
9	73.7	422989.5	1.05E+003	0	25000	0.0000	0.0000
10	70.4	419363.2	957.	0	25000	0.0000	0.0000
11	67.1	415736.8	861.	0	25000	0.0000	0.0000
12	63.7	412110.5	765.	0	25000	0.0000	0.0000
13	60.4	408484.2	669.	0	25000	0.0000	0.0000
14	57.0	404857.9	574.	0	25000	0.0000	0.0000
15	53.7	401231.6	478.	0	25000	0.0000	0.0000
16	50.4	397605.2	382.	0	25000	0.0000	0.0000
17	47.0	393978.9	287.	0	25000	0.0000	0.0000
18	43.7	390352.6	191.	0	25000	0.0000	0.0000
19	40.3	386726.3	95.8	0	25000	0.0000	0.0000
20	37.0	383100.0	0.2063	0	25000	0.0000	0.0000

HEATING CURVES SUMMARY

Eqp # 26 Unit type : HTXR Unit name: COILS

Stream 3122

NP	Temp C	Pres Pa	Del H kW	Vapor kg/h	Liquid kg/h	Vap mole frac.	Vap mass frac.
1	50.0	108218.6	1.19E+003	20156	42358	0.2522	0.3224
2	49.3	108218.6	1.12E+003	20100	42415	0.2511	0.3215
3	48.6	108218.6	1.05E+003	20045	42469	0.2500	0.3206
4	47.9	108218.6	978.	19993	42522	0.2490	0.3198
5	47.2	108218.6	910.	19942	42572	0.2481	0.3190
6	46.6	108218.6	842.	19893	42621	0.2471	0.3182
7	45.9	108218.6	776.	19846	42668	0.2462	0.3175
8	45.2	108218.6	711.	19801	42714	0.2454	0.3167
9	44.5	108218.6	647.	19757	42757	0.2446	0.3160
10	43.8	108218.6	584.	19715	42800	0.2438	0.3154
11	43.1	108218.6	522.	19674	42840	0.2430	0.3147
12	42.5	108218.6	460.	19635	42879	0.2422	0.3141
13	41.8	108218.6	400.	19597	42917	0.2415	0.3135
14	41.1	108218.6	340.	19561	42954	0.2408	0.3129
15	40.4	108218.6	282.	19526	42989	0.2402	0.3123
16	39.7	108218.6	224.	19492	43023	0.2395	0.3118
17	39.0	108218.6	167.	19459	43055	0.2389	0.3113
18	38.4	108218.6	111.	19428	43087	0.2383	0.3108
19	37.7	108218.6	54.9	19397	43117	0.2377	0.3103
20	37.0	108218.6	0.000	19368	43146	0.2372	0.3098

Eqp # 36 Unit type : HTXR Unit name: COILS

Stream 3123

NP	Temp C	Pres Pa	Del H kW	Vapor kg/h	Liquid kg/h	Vap mole frac.	Vap mass frac.
1	57.2	108083.9	9.89E+003	7913	473759	0.0088	0.0164
2	56.1	104457.6	9.36E+003	7899	473773	0.0088	0.0164
3	55.1	100831.3	8.83E+003	7886	473786	0.0088	0.0164
4	54.0	97205.0	8.31E+003	7874	473797	0.0087	0.0163
5	52.9	93578.6	7.78E+003	7864	473807	0.0087	0.0163
6	51.9	89952.3	7.25E+003	7855	473816	0.0087	0.0163
7	50.8	86326.0	6.72E+003	7848	473823	0.0087	0.0163
8	49.8	82699.7	6.20E+003	7842	473829	0.0087	0.0163
9	48.7	79073.4	5.67E+003	7838	473833	0.0086	0.0163
10	47.6	75447.1	5.15E+003	7836	473835	0.0086	0.0163
11	46.6	71820.8	4.63E+003	7836	473835	0.0086	0.0163
12	45.5	68194.4	4.11E+003	7839	473833	0.0086	0.0163
13	44.4	64568.1	3.59E+003	7843	473828	0.0086	0.0163
14	43.4	60941.8	3.07E+003	7851	473821	0.0087	0.0163
15	42.3	57315.5	2.55E+003	7862	473810	0.0087	0.0163
16	41.3	53689.2	2.03E+003	7876	473795	0.0087	0.0164
17	40.2	50062.9	1.52E+003	7895	473777	0.0087	0.0164
18	39.1	46436.5	1.01E+003	7919	473753	0.0088	0.0164
19	38.1	42810.2	503.	7949	473722	0.0088	0.0165
20	37.0	39183.9	0.000	7988	473684	0.0089	0.0166

HEATING CURVES SUMMARY

Eqp # 40 Unit type : HTXR Unit name: TT-401A

Stream 4101

NP	Temp C	Pres Pa	Del H kW	Vapor kg/h	Liquid kg/h	Vap mole frac.	Vap mass frac.
1	100.4	452000.0	3.46	0	46	0.0000	0.0000
2	97.0	448373.7	3.27	0	46	0.0000	0.0000
3	93.6	444747.4	3.09	0	46	0.0000	0.0000
4	90.1	441121.0	2.91	0	46	0.0000	0.0000
5	86.7	437494.7	2.73	0	46	0.0000	0.0000
6	83.2	433868.4	2.54	0	46	0.0000	0.0000
7	79.8	430242.1	2.36	0	46	0.0000	0.0000
8	76.3	426615.8	2.18	0	46	0.0000	0.0000
9	72.9	422989.5	2.00	0	46	0.0000	0.0000
10	69.4	419363.2	1.82	0	46	0.0000	0.0000
11	66.0	415736.8	1.63	0	46	0.0000	0.0000
12	62.6	412110.5	1.45	0	46	0.0000	0.0000
13	59.1	408484.2	1.27	0	46	0.0000	0.0000
14	55.7	404857.9	1.09	0	46	0.0000	0.0000
15	52.2	401231.6	0.9074	0	46	0.0000	0.0000
16	48.8	397605.2	0.7259	0	46	0.0000	0.0000
17	45.3	393978.9	0.5445	0	46	0.0000	0.0000
18	41.9	390352.6	0.3631	0	46	0.0000	0.0000
19	38.4	386726.3	0.1817	0	46	0.0000	0.0000
20	35.0	383100.0	0.0003847	0	46	0.0000	0.0000

Eqp # 41 Unit type : HTXR Unit name: TT-401B

Stream 4102

NP	Temp C	Pres Pa	Del H kW	Vapor kg/h	Liquid kg/h	Vap mole frac.	Vap mass frac.
1	35.0	383100.0	0.3686	0	46	0.0000	0.0000
2	34.6	379473.7	0.3492	0	46	0.0000	0.0000
3	34.3	375847.3	0.3298	0	46	0.0000	0.0000
4	33.9	372221.0	0.3104	0	46	0.0000	0.0000
5	33.5	368594.7	0.2910	0	46	0.0000	0.0000
6	33.2	364968.4	0.2716	0	46	0.0000	0.0000
7	32.8	361342.1	0.2522	0	46	0.0000	0.0000
8	32.4	357715.8	0.2328	0	46	0.0000	0.0000
9	32.1	354089.5	0.2134	0	46	0.0000	0.0000
10	31.7	350463.2	0.1940	0	46	0.0000	0.0000
11	31.3	346836.8	0.1746	0	46	0.0000	0.0000
12	30.9	343210.5	0.1552	0	46	0.0000	0.0000
13	30.6	339584.2	0.1358	0	46	0.0000	0.0000
14	30.2	335957.9	0.1164	0	46	0.0000	0.0000
15	29.8	332331.6	0.09697	0	46	0.0000	0.0000
16	29.5	328705.2	0.07757	0	46	0.0000	0.0000
17	29.1	325078.9	0.05819	0	46	0.0000	0.0000
18	28.7	321452.6	0.03880	0	46	0.0000	0.0000
19	28.4	317826.3	0.01940	0	46	0.0000	0.0000
20	28.0	314200.0	0.000	0	46	0.0000	0.0000

HEATING CURVES SUMMARY

Eqp # 46 Unit type : HTXR Unit name: COILS

Stream 4135

NP	Temp C	Pres Pa	Del H kW	Vapor kg/h	Liquid kg/h	Vap mole frac.	Vap mass frac.
1	67.1	433798.3	21.3	540	64	0.8643	0.8943
2	65.0	433798.3	19.5	538	66	0.8593	0.8910
3	63.0	433798.3	17.9	536	68	0.8547	0.8880
4	60.9	433798.3	16.3	534	69	0.8505	0.8852
5	58.8	433798.3	14.9	533	71	0.8467	0.8827
6	56.8	433798.3	13.5	531	72	0.8431	0.8803
7	54.7	433798.3	12.2	530	73	0.8399	0.8782
8	52.7	433798.3	11.0	529	75	0.8370	0.8763
9	50.6	433798.3	9.80	528	76	0.8343	0.8745
10	48.6	433798.3	8.70	527	77	0.8319	0.8729
11	46.5	433798.3	7.64	526	78	0.8297	0.8714
12	44.4	433798.3	6.64	525	78	0.8276	0.8701
13	42.4	433798.3	5.68	524	79	0.8258	0.8688
14	40.3	433798.3	4.77	524	80	0.8241	0.8677
15	38.3	433798.3	3.89	523	80	0.8226	0.8667
16	36.2	433798.3	3.06	522	81	0.8213	0.8658
17	34.2	433798.3	2.25	522	81	0.8200	0.8650
18	32.1	433798.3	1.48	521	82	0.8189	0.8642
19	30.1	433798.3	0.7211	521	82	0.8178	0.8634
20	28.0	433798.3	0.000	521	83	0.8169	0.8628

Eqp # 52 Unit type : HTXR Unit name: TT-402A

Stream 4118

NP	Temp C	Pres Pa	Del H kW	Vapor kg/h	Liquid kg/h	Vap mole frac.	Vap mass frac.
1	100.4	452000.0	1.13E+003	0	15000	0.0000	0.0000
2	97.0	448373.7	1.07E+003	0	15000	0.0000	0.0000
3	93.6	444747.4	1.01E+003	0	15000	0.0000	0.0000
4	90.1	441121.0	948.	0	15000	0.0000	0.0000
5	86.7	437494.7	889.	0	15000	0.0000	0.0000
6	83.2	433868.4	829.	0	15000	0.0000	0.0000
7	79.8	430242.1	770.	0	15000	0.0000	0.0000
8	76.3	426615.8	711.	0	15000	0.0000	0.0000
9	72.9	422989.5	651.	0	15000	0.0000	0.0000
10	69.4	419363.2	592.	0	15000	0.0000	0.0000
11	66.0	415736.8	533.	0	15000	0.0000	0.0000
12	62.6	412110.5	474.	0	15000	0.0000	0.0000
13	59.1	408484.2	414.	0	15000	0.0000	0.0000
14	55.7	404857.9	355.	0	15000	0.0000	0.0000
15	52.2	401231.6	296.	0	15000	0.0000	0.0000
16	48.8	397605.2	237.	0	15000	0.0000	0.0000
17	45.3	393978.9	178.	0	15000	0.0000	0.0000
18	41.9	390352.6	118.	0	15000	0.0000	0.0000
19	38.4	386726.3	59.3	0	15000	0.0000	0.0000
20	35.0	383100.0	0.1266	0	15000	0.0000	0.0000

HEATING CURVES SUMMARY

Eqp # 53 Unit type : HTXR Unit name: TT-402B

Stream 4119

NP	Temp C	Pres Pa	Del H kW	Vapor kg/h	Liquid kg/h	Vap mole frac.	Vap mass frac.
1	35.0	383100.0	137.	0	15000	0.0000	0.0000
2	34.6	379473.7	130.	0	15000	0.0000	0.0000
3	34.2	375847.3	123.	0	15000	0.0000	0.0000
4	33.7	372221.0	116.	0	15000	0.0000	0.0000
5	33.3	368594.7	108.	0	15000	0.0000	0.0000
6	32.9	364968.4	101.	0	15000	0.0000	0.0000
7	32.5	361342.1	94.0	0	15000	0.0000	0.0000
8	32.1	357715.8	86.7	0	15000	0.0000	0.0000
9	31.6	354089.5	79.5	0	15000	0.0000	0.0000
10	31.2	350463.2	72.3	0	15000	0.0000	0.0000
11	30.8	346836.8	65.1	0	15000	0.0000	0.0000
12	30.4	343210.5	57.8	0	15000	0.0000	0.0000
13	29.9	339584.2	50.6	0	15000	0.0000	0.0000
14	29.5	335957.9	43.4	0	15000	0.0000	0.0000
15	29.1	332331.6	36.1	0	15000	0.0000	0.0000
16	28.7	328705.2	28.9	0	15000	0.0000	0.0000
17	28.3	325078.9	21.7	0	15000	0.0000	0.0000
18	27.8	321452.6	14.5	0	15000	0.0000	0.0000
19	27.4	317826.3	7.23	0	15000	0.0000	0.0000
20	27.0	314200.0	0.000	0	15000	0.0000	0.0000

Eqp # 60 Unit type : HTXR Unit name: COILS

Stream 4125

NP	Temp C	Pres Pa	Del H kW	Vapor kg/h	Liquid kg/h	Vap mole frac.	Vap mass frac.
1	59.2	109652.3	3.14E+003	32508	21344	0.5200	0.6036
2	57.5	109652.3	2.87E+003	32177	21676	0.5120	0.5975
3	55.9	109652.3	2.62E+003	31875	21977	0.5047	0.5919
4	54.3	109652.3	2.38E+003	31601	22251	0.4981	0.5868
5	52.6	109652.3	2.16E+003	31351	22502	0.4921	0.5822
6	51.0	109652.3	1.96E+003	31122	22730	0.4865	0.5779
7	49.3	109652.3	1.77E+003	30913	22939	0.4815	0.5740
8	47.7	109652.3	1.58E+003	30722	23131	0.4769	0.5705
9	46.1	109652.3	1.41E+003	30547	23306	0.4727	0.5672
10	44.4	109652.3	1.25E+003	30386	23466	0.4689	0.5643
11	42.8	109652.3	1.10E+003	30239	23613	0.4653	0.5615
12	41.1	109652.3	952.	30105	23747	0.4621	0.5590
13	39.5	109652.3	814.	29981	23871	0.4591	0.5567
14	37.8	109652.3	682.	29868	23984	0.4564	0.5546
15	36.2	109652.3	556.	29765	24087	0.4540	0.5527
16	34.6	109652.3	436.	29670	24182	0.4517	0.5509
17	32.9	109652.3	321.	29583	24270	0.4496	0.5493
18	31.3	109652.3	211.	29503	24349	0.4477	0.5478
19	29.6	109652.3	102.	29402	24450	0.4457	0.5460
20	28.0	109652.3	0.000	29334	24518	0.4441	0.5447

HEATING CURVES SUMMARY

Eqp # 75 Unit type : HTXR Unit name: COILS

Stream 5112

NP	Temp C	Pres Pa	Del H kW	Vapor kg/h	Liquid kg/h	Vap mole frac.	Vap mass frac.
1	47.7	109069.5	1.46E+003	15448	98339	0.1040	0.1358
2	47.1	109069.5	1.38E+003	15411	98376	0.1037	0.1354
3	46.6	109069.5	1.30E+003	15375	98412	0.1034	0.1351
4	46.0	109069.5	1.22E+003	15340	98446	0.1030	0.1348
5	45.4	109069.5	1.14E+003	15307	98480	0.1027	0.1345
6	44.9	109069.5	1.06E+003	15274	98513	0.1024	0.1342
7	44.3	109069.5	979.	15242	98545	0.1021	0.1339
8	43.7	109069.5	901.	15210	98576	0.1018	0.1337
9	43.2	109069.5	824.	15180	98607	0.1015	0.1334
10	42.6	109069.5	746.	15151	98636	0.1012	0.1332
11	42.1	109069.5	670.	15122	98665	0.1010	0.1329
12	41.5	109069.5	594.	15095	98692	0.1007	0.1327
13	40.9	109069.5	518.	15068	98719	0.1005	0.1324
14	40.4	109069.5	443.	15042	98745	0.1002	0.1322
15	39.8	109069.5	368.	15016	98771	0.1000	0.1320
16	39.2	109069.5	294.	14991	98796	0.0997	0.1317
17	38.7	109069.5	220.	14967	98820	0.0995	0.1315
18	38.1	109069.5	146.	14944	98843	0.0993	0.1313
19	37.6	109069.5	72.8	14921	98866	0.0991	0.1311
20	37.0	109069.5	0.000	14899	98888	0.0989	0.1309

Eqp # 86 Unit type : HTXR Unit name: COILS

Stream 5136

NP	Temp C	Pres Pa	Del H kW	Vapor kg/h	Liquid kg/h	Vap mole frac.	Vap mass frac.
1	48.1	109115.3	6.09E+003	16118	482817	0.0166	0.0323
2	47.5	109115.3	5.76E+003	16071	482863	0.0165	0.0322
3	46.9	109115.3	5.44E+003	16026	482908	0.0165	0.0321
4	46.4	109115.3	5.11E+003	15982	482953	0.0164	0.0320
5	45.8	109115.3	4.79E+003	15938	482996	0.0163	0.0319
6	45.2	109115.3	4.47E+003	15896	483038	0.0163	0.0319
7	44.6	109115.3	4.14E+003	15855	483080	0.0162	0.0318
8	44.0	109115.3	3.82E+003	15814	483120	0.0161	0.0317
9	43.4	109115.3	3.50E+003	15775	483160	0.0161	0.0316
10	42.9	109115.3	3.18E+003	15736	483198	0.0160	0.0315
11	42.3	109115.3	2.86E+003	15698	483236	0.0159	0.0315
12	41.7	109115.3	2.54E+003	15661	483274	0.0159	0.0314
13	41.1	109115.3	2.22E+003	15624	483310	0.0158	0.0313
14	40.5	109115.3	1.90E+003	15588	483346	0.0158	0.0312
15	39.9	109115.3	1.59E+003	15553	483381	0.0157	0.0312
16	39.3	109115.3	1.27E+003	15519	483416	0.0157	0.0311
17	38.8	109115.3	950.	15485	483450	0.0156	0.0310
18	38.2	109115.3	633.	15451	483483	0.0156	0.0310
19	37.6	109115.3	316.	15419	483516	0.0155	0.0309
20	37.0	109115.3	0.000	15386	483548	0.0155	0.0308

HEATING CURVES SUMMARY

Eqp # 93 Unit type : HTXR Unit name: TT-615

Stream 510

NP	Temp C	Pres Pa	Del H kW	Vapor kg/h	Liquid kg/h	Vap mole frac.	Vap mass frac.
1	37.1	520000.0	3.90	0	483548	0.0000	0.0000
2	38.3	516373.7	605.	0	483548	0.0000	0.0000
3	39.5	512747.4	1.21E+003	0	483548	0.0000	0.0000
4	40.6	509121.0	1.81E+003	0	483548	0.0000	0.0000
5	41.8	505494.7	2.41E+003	0	483548	0.0000	0.0000
6	43.0	501868.4	3.01E+003	0	483548	0.0000	0.0000
7	44.1	498242.1	3.61E+003	0	483548	0.0000	0.0000
8	45.3	494615.8	4.21E+003	0	483548	0.0000	0.0000
9	46.5	490989.5	4.82E+003	0	483548	0.0000	0.0000
10	47.6	487363.2	5.42E+003	0	483548	0.0000	0.0000
11	48.8	483736.9	6.02E+003	0	483548	0.0000	0.0000
12	50.0	480110.5	6.62E+003	0	483548	0.0000	0.0000
13	51.1	476484.2	7.22E+003	0	483548	0.0000	0.0000
14	52.3	472857.9	7.83E+003	0	483548	0.0000	0.0000
15	53.5	469231.6	8.43E+003	0	483548	0.0000	0.0000
16	54.6	465605.3	9.03E+003	0	483548	0.0000	0.0000
17	55.8	461979.0	9.63E+003	0	483548	0.0000	0.0000
18	56.9	458352.6	1.02E+004	0	483548	0.0000	0.0000
19	58.1	454726.3	1.08E+004	0	483548	0.0000	0.0000
20	59.3	451100.0	1.14E+004	0	483548	0.0000	0.0000

Stream 216

NP	Temp C	Pres Pa	Del H kW	Vapor kg/h	Liquid kg/h	Vap mole frac.	Vap mass frac.
1	102.0	108000.0	1.14E+004	18256	0	1.0000	1.0000
2	101.2	107273.7	2.54E+003	3845	14410	0.2014	0.2106
3	100.5	106547.4	446.	321	17935	0.0151	0.0176
4	99.7	105821.0	328.	141	18115	0.0061	0.0077
5	98.9	105094.7	284.	91	18165	0.0036	0.0050
6	98.1	104368.4	255.	67	18188	0.0025	0.0037
7	97.4	103642.1	232.	53	18203	0.0018	0.0029
8	96.6	102915.8	210.	43	18213	0.0014	0.0023
9	95.8	102189.5	191.	35	18220	0.0011	0.0019
10	95.0	101463.2	172.	29	18226	0.0008	0.0016
11	94.3	100736.8	154.	24	18231	0.0007	0.0013
12	93.5	100010.5	136.	20	18236	0.0005	0.0011
13	92.7	99284.2	118.	16	18239	0.0004	0.0009
14	92.0	98557.9	101.	13	18243	0.0003	0.0007
15	91.2	97831.6	83.6	9	18246	0.0002	0.0005
16	90.4	97105.3	66.5	6	18249	0.0001	0.0003
17	89.6	96378.9	49.5	3	18252	0.0001	0.0002
18	88.9	95652.6	32.5	1	18255	0.0000	0.0000
19	88.1	94926.3	16.2	0	18256	0.0000	0.0000
20	87.3	94200.0	0.000	0	18256	0.0000	0.0000

HEATING CURVES SUMMARY

Eqp # 94 Unit type : HTXR Unit name: TT-613

Stream 6102

NP	Temp C	Pres Pa	Del H kW	Vapor kg/h	Liquid kg/h	Vap mole frac.	Vap mass frac.
1	59.3	451100.0	0.000	0	483548	0.0000	0.0000
2	61.4	447473.7	1.11E+003	0	483548	0.0000	0.0000
3	63.6	443847.4	2.22E+003	0	483548	0.0000	0.0000
4	65.7	440221.1	3.33E+003	0	483548	0.0000	0.0000
5	67.9	436594.8	4.44E+003	0	483548	0.0000	0.0000
6	70.0	432968.4	5.55E+003	0	483548	0.0000	0.0000
7	72.1	429342.1	6.66E+003	0	483548	0.0000	0.0000
8	74.3	425715.8	7.77E+003	0	483548	0.0000	0.0000
9	76.4	422089.5	8.89E+003	0	483548	0.0000	0.0000
10	78.6	418463.2	1.00E+004	26	483522	0.0000	0.0001
11	80.7	414836.8	1.11E+004	65	483483	0.0001	0.0001
12	82.9	411210.5	1.22E+004	101	483447	0.0001	0.0002
13	85.0	407584.2	1.34E+004	135	483412	0.0001	0.0003
14	87.1	403957.9	1.45E+004	168	483380	0.0002	0.0003
15	89.3	400331.6	1.56E+004	199	483349	0.0002	0.0004
16	91.4	396705.3	1.67E+004	229	483319	0.0002	0.0005
17	93.6	393079.0	1.78E+004	257	483290	0.0003	0.0005
18	95.7	389452.6	1.90E+004	286	483262	0.0003	0.0006
19	97.9	385826.3	2.01E+004	313	483234	0.0003	0.0006
20	100.0	382200.0	2.12E+004	341	483206	0.0004	0.0007

Eqp # 97 Unit type : HTXR Unit name: (REBOILER)

Stream 6107

NP	Temp C	Pres Pa	Del H kW	Vapor kg/h	Liquid kg/h	Vap mole frac.	Vap mass frac.
1	100.0	126626.0	0.000	0	34359	0.0000	0.0000
2	100.3	126626.0	1.53	0	34359	0.0000	0.0000
3	100.6	126626.0	3.06	0	34359	0.0000	0.0000
4	100.9	126626.0	4.59	0	34359	0.0000	0.0000
5	101.3	126626.0	6.11	0	34359	0.0000	0.0000
6	101.6	126626.0	7.64	0	34359	0.0000	0.0000
7	101.9	126626.0	9.17	0	34359	0.0000	0.0000
8	102.2	126626.0	10.7	0	34359	0.0000	0.0000
9	102.5	126626.0	12.2	0	34359	0.0000	0.0000
10	102.8	126626.0	13.8	0	34359	0.0000	0.0000
11	103.2	126626.0	15.3	0	34359	0.0000	0.0000
12	103.5	126626.0	16.8	0	34359	0.0000	0.0000
13	103.8	126626.0	18.4	0	34359	0.0000	0.0000
14	104.1	126626.0	19.9	0	34359	0.0000	0.0000
15	104.4	126626.0	21.4	0	34359	0.0000	0.0000
16	104.7	126626.0	23.0	0	34359	0.0000	0.0000
17	105.1	126626.0	24.5	0	34359	0.0000	0.0000
18	105.4	126626.0	26.1	0	34359	0.0000	0.0000
19	105.7	126626.0	27.6	0	34359	0.0000	0.0000
20	106.0	126626.0	29.1	0	34359	0.0000	0.0000

HEATING CURVES SUMMARY

Eqp # 112 Unit type : HTXR Unit name: TT-802

Stream 8104

NP	Temp C	Pres Pa	Del H kW	Vapor kg/h	Liquid kg/h	Vap mole frac.	Vap mass frac.
1	98.8	411000.0	9.26E+003	0	126322	0.0000	0.0000
2	95.5	407373.7	8.77E+003	0	126322	0.0000	0.0000
3	92.1	403747.4	8.28E+003	0	126322	0.0000	0.0000
4	88.8	400121.1	7.79E+003	0	126322	0.0000	0.0000
5	85.4	396494.8	7.30E+003	0	126322	0.0000	0.0000
6	82.0	392868.4	6.81E+003	0	126322	0.0000	0.0000
7	78.7	389242.1	6.32E+003	0	126322	0.0000	0.0000
8	75.3	385615.8	5.84E+003	0	126322	0.0000	0.0000
9	72.0	381989.5	5.35E+003	0	126322	0.0000	0.0000
10	68.6	378363.2	4.86E+003	0	126322	0.0000	0.0000
11	65.2	374736.8	4.38E+003	0	126322	0.0000	0.0000
12	61.9	371110.5	3.89E+003	0	126322	0.0000	0.0000
13	58.5	367484.2	3.40E+003	0	126322	0.0000	0.0000
14	55.2	363857.9	2.92E+003	0	126322	0.0000	0.0000
15	51.8	360231.6	2.43E+003	0	126322	0.0000	0.0000
16	48.4	356605.3	1.94E+003	0	126322	0.0000	0.0000
17	45.1	352979.0	1.46E+003	0	126322	0.0000	0.0000
18	41.7	349352.6	971.	0	126322	0.0000	0.0000
19	38.4	345726.3	486.	0	126322	0.0000	0.0000
20	35.0	342100.0	0.000	0	126322	0.0000	0.0000

Job Name: BOIL-BAS

Date: 07-07-94 Time: 15:06

FLOWSHEET SUMMARY

Equipment	Label	Stream Numbers
1	MIXE	3113 4113 419 6302 813 -8301
2	MIXE	631 821 6213 -8304
3	COMP PB-817	8301 -8302
4	MIXE	6411 8302 -8303

Stream Connections

Stream	Equipment From	Equipment To	Stream	Equipment From	Equipment To	Stream	Equipment From	Equipment To
419		1	4113		1	8302	3	4
631		2	6213		2	8303	4	
813		1	6302		1	8304	2	
821		2	6411		4			
3113		1	8301	1	3			

Equipment Calculation Sequence
1 2 3 4

No recycle loops in the flowsheet.

COMPONENTS

	ID #	Name
1	62	Water
2	8003	Cellulose
3	8004	Xylan
4	8008	Arabinan
5	8009	Mannan
6	8010	Galacatan
7	776	Alpha-D-Glucose
8	8001	Xylose
9	8005	Arabinose
10	8006	Mannose
11	8007	Galactose
12	134	Ethanol
13	8002	HMF
14	164	Furfural
15	931	Calcium Sulfate
16	268	Glycerol
17	8011	Lignin
18	8016	Soluble Solids
19	8013	Ash
20	8014	Cell Mass

21	431	Sulfuric Acid
22	929	CalciumHydroxide
23	8015	Cellulase
24	475	Air
25	46	Nitrogen
26	47	Oxygen
27	49	Carbon Dioxide
28	128	Acetaldehyde
29	315	3-Mth-1-Butanol
30	2	Methane
31	63	Ammonia

THERMODYNAMICS

K-value model : NRTL
No corrrection for vapor fugacity
Enthalpy model : Heat of Vaporization (Latent Heat)
Liquid density : Library

NRTL Parameters:

I	J	Bij	Bji	Alpha
1	12	670.441	-55.168	0.303
1	16	258.114	-274.349	1.011
1	21	-1228.663	-1894.248	0.243
1	28	662.993	-23.571	0.287
1	29	1828.452	-249.014	0.282
12	14	510.442	328.316	0.777
12	16	398.444	79.505	0.296
12	28	195.116	-553.744	0.409
12	29	25.750	-21.569	0.301
30	31	-0.131	237.017	0.000

Warning : BIP matrix is less than 50 % full.

Overall Mass Balance	kmol/h		kg/h	
	Input	Output	Input	Output
Water	946.267	946.267	17046.999	17046.999
Cellulose	23.615	23.615	3829.000	3829.000
Xylan	1.325	1.325	175.000	175.000
Arabinan	0.098	0.098	13.000	13.000
Mannan	0.574	0.574	93.000	93.000
Galacatan	0.167	0.167	27.000	27.000
Alpha-D-Glucose	0.000	0.000	0.000	0.000
Xylose	0.613	0.613	92.000	92.000
Arabinose	0.047	0.047	7.000	7.000
Mannose	0.000	0.000	0.000	0.000
Galactose	0.000	0.000	0.000	0.000
Ethanol	9.963	9.963	459.000	459.000
HMF	0.016	0.016	2.000	2.000
Furfural	0.968	0.968	93.000	93.000
Calcium Sulfate	11.774	11.774	1603.000	1603.000
Glycerol	3.605	3.605	332.000	332.000
Lignin	142.322	142.322	17405.999	17405.999
Soluble Solids	2.425	2.425	4012.000	4012.000
Ash	1.186	1.186	145.000	145.000
Cell Mass	1.126	1.126	2603.000	2603.000
Sulfuric Acid	0.000	0.000	0.000	0.000
CalciumHydroxide	0.040	0.040	3.000	3.000
Cellulase	0.000	0.000	0.000	0.000
Air	1842.182	1842.182	53332.999	53332.999
Nitrogen	215.178	215.178	6028.007	6028.007
Oxygen	1.353	1.353	43.308	43.308
Carbon Dioxide	544.111	544.111	23946.322	23946.322
Acetaldehyde	0.136	0.136	6.000	6.000
3-Mth-1-Butanol	0.170	0.170	15.000	15.000
Methane	0.020	0.020	0.323	0.323
Ammonia	0.000	0.000	0.000	0.000
Total	3749.280	3749.280	131312.964	131312.964

EQUIPMENT SUMMARIES

Mixer Summary

Equip. No.	1	2	4
Name			
Output Pressure Pa	101000.0000	108000.0000	111000.0000

Compressor Summary

Equip. No.	3
Name	PB-817
Type of Compressor:	1
Pressure out Pa	111000.0000
Efficiency	0.8500
Actual power kW	138.6532
Cp/Cv	1.3907
Ideal Cp/Cv	1.3917
Theoretical power kW	117.8552

STREAM PROPERTIES

Stream No.	419	631	813	821
Name				
- - Overall - -				
Mass flow kg/h	29373.	42984.	180.	2192.
Temp C	28.	100.	41.	20.
Pres Pa	108000.	108000.	108000.	102000.
Vapor mass fraction	0.99883	0.0000	0.0054478	0.0000
Enth kW	-5991.	-2.193E+005	-775.8	-5983.
Std. sp gr , wtr = 1	0.856	1.329	0.998	1.042
Std. sp gr , air = 1	1.000	1.577	0.632	1.094
Average mol wt	29.	46.	18.	32.
Actual vol m3/h	23459.	30.	1.	1.
RVP Pa		5196.113	136463.016	6354.029

STREAM PROPERTIES

Stream No.	3113	4113	6213	6302
Name				
- - Overall - -				
Mass flow kg/h	19370.	529.	458.	153.
Temp C	37.	28.	80.	100.
Pres Pa	108000.	108000.	540000.	126626.
Vapor mass fraction	0.99803	0.99941	0.0000	1.000
Enth kW	-3786.	-61.92	-810.1	-353.7
Std. sp gr , wtr = 1	0.863	0.862	0.804	0.826
Std. sp gr , air = 1	0.985	0.989	1.470	1.598
Average mol wt	29.	29.	43.	46.
Actual vol m3/h	16157.	427.	1.	81.
RVP Pa			15930.727	69706712.000

STREAM PROPERTIES

Stream No.	6411	8301	8302	8303
Name				
- - Overall - -				
Mass flow kg/h	36074.	49605.	49605.	85679.
Temp C	39.	31.	34.	34.
Pres Pa	108000.	101000.	111000.	111000.
Vapor mass fraction	1.000	0.99502	0.99811	1.000
Enth kW	-5.677E+004	-1.097E+004	-1.083E+004	-6.760E+004
Std. sp gr , wtr = 1	0.840	0.859	0.859	0.851
Std. sp gr , air = 1	1.241	0.993	0.993	1.084
Average mol wt	36.	29.	29.	31.
Actual vol m3/h	24052.	42807.	39594.	62716.
RVP Pa				

STREAM PROPERTIES

Stream No.	8304
Name	
- - Overall - -	
Mass flow kg/h	45634.
Temp C	94.
Pres Pa	108000.
Vapor mass fraction	0.0000
Enth kW	-2.261E+005
Std. sp gr , wtr = 1	1.303
Std. sp gr , air = 1	1.543
Average mol wt	45.
Actual vol m3/h	31.
RVP Pa	5635.472

FLOW SUMMARIES

Stream No.	419	631	813	821
Stream Name				
Temp C	28.0000	100.0000	40.9000	20.0000
Pres Pa	108000.0000	108000.0000	108000.0000	102000.0000
Enth kW	-5991.2	-2.1933E+005	-775.81	-5982.7
Vapor mass fraction	0.998828	0.00000	0.00544782	0.00000
Total kg/h	29373.	42984.	180.	2192.
Component mass fractions				
Water	0.0218	0.3160	0.9780	0.5502
Cellulose	0.0000	0.0891	0.0000	0.0000
Xylan	0.0000	0.0041	0.0000	0.0000
Arabinan	0.0000	0.0003	0.0000	0.0000
Mannan	0.0000	0.0022	0.0000	0.0000
Galacatan	0.0000	0.0006	0.0000	0.0000
Alpha-D-Glucose	0.0000	0.0000	0.0000	0.0000
Xylose	0.0000	0.0021	0.0000	0.0000
Arabinose	0.0000	0.0002	0.0000	0.0000
Mannose	0.0000	0.0000	0.0000	0.0000
Galactose	0.0000	0.0000	0.0000	0.0000
Ethanol	0.0000	0.0000	0.0000	0.0000
HMF	0.0000	0.0000	0.0111	0.0000
Furfural	0.0007	0.0010	0.0056	0.0000
Calcium Sulfate	0.0000	0.0368	0.0000	0.0091
Glycerol	0.0000	0.0077	0.0000	0.0000
Lignin	0.0000	0.4000	0.0000	0.0972
Soluble Solids	0.0000	0.0933	0.0000	0.0000
Ash	0.0000	0.0033	0.0000	0.0009
Cell Mass	0.0000	0.0431	0.0000	0.3426
Sulfuric Acid	0.0000	0.0000	0.0000	0.0000
CalciumHydroxide	0.0000	0.0001	0.0000	0.0000
Cellulase	0.0000	0.0000	0.0000	0.0000
Air	0.8125	0.0000	0.0000	0.0000
Nitrogen	0.1156	0.0000	0.0000	0.0000
Oxygen	0.0000	0.0000	0.0017	0.0000
Carbon Dioxide	0.0494	0.0000	0.0018	0.0000
Acetaldehyde	0.0000	0.0000	0.0000	0.0000
3-Mth-1-Butanol	0.0000	0.0000	0.0000	0.0000
Methane	0.0000	0.0000	0.0018	0.0000
Ammonia	0.0000	0.0000	0.0000	0.0000

FLOW SUMMARIES

Stream No.	3113	4113	6213	6302
Stream Name				
Temp C	37.0000	28.0000	80.0000	100.0000
Pres Pa	108000.0000	108000.0000	540000.0000	126626.0000
Enth kW	-3785.7	-61.924	-810.07	-353.66
Vapor mass fraction	0.998032	0.999406	0.00000	1.0000
Total kg/h	19370.	529.	458.	153.
Component mass fractions				
Water	0.0367	0.0227	0.0524	0.0000
Cellulose	0.0000	0.0000	0.0000	0.0000
Xylan	0.0000	0.0000	0.0000	0.0000
Arabinan	0.0000	0.0000	0.0000	0.0000
Mannan	0.0000	0.0000	0.0000	0.0000
Galacatan	0.0000	0.0000	0.0000	0.0000
Alpha-D-Glucose	0.0000	0.0000	0.0000	0.0000
Xylose	0.0000	0.0000	0.0000	0.0000
Arabinose	0.0000	0.0000	0.0000	0.0000
Mannose	0.0000	0.0000	0.0000	0.0000
Galactose	0.0000	0.0000	0.0000	0.0000
Ethanol	0.0000	0.0000	0.9454	0.0000
HMF	0.0000	0.0000	0.0000	0.0000
Furfural	0.0013	0.0000	0.0000	0.0000
Calcium Sulfate	0.0000	0.0000	0.0000	0.0000
Glycerol	0.0000	0.0000	0.0000	0.0000
Lignin	0.0000	0.0000	0.0000	0.0000
Soluble Solids	0.0000	0.0000	0.0000	0.0000
Ash	0.0000	0.0000	0.0000	0.0000
Cell Mass	0.0000	0.0000	0.0000	0.0000
Sulfuric Acid	0.0000	0.0000	0.0000	0.0000
CalciumHydroxide	0.0000	0.0000	0.0000	0.0000
Cellulase	0.0000	0.0000	0.0000	0.0000
Air	0.8837	0.9338	0.0000	0.0000
Nitrogen	0.0539	0.0302	0.0000	0.0000
Oxygen	0.0000	0.0000	0.0000	0.0000
Carbon Dioxide	0.0244	0.0132	0.0000	0.9020
Acetaldehyde	0.0000	0.0000	0.0022	0.0000
3-Mth-1-Butanol	0.0000	0.0000	0.0000	0.0980
Methane	0.0000	0.0000	0.0000	0.0000
Ammonia	0.0000	0.0000	0.0000	0.0000

FLOW SUMMARIES

Stream No.	6411	8301	8302	8303
Stream Name				
Temp C	39.0000	30.7253	34.3464	34.1895
Pres Pa	108000.0000	101000.0000	111000.0000	111000.0000
Enth kW	-56767.	-10968.	-10830.	-67596.
Vapor mass fraction	1.0000	0.995019	0.998105	1.0000
Total kg/h	36074.	49605.	49605.	85679.
Component mass fractions				
Water	0.0193	0.0310	0.0310	0.0261
Cellulose	0.0000	0.0000	0.0000	0.0000
Xylan	0.0000	0.0000	0.0000	0.0000
Arabinan	0.0000	0.0000	0.0000	0.0000
Mannan	0.0000	0.0000	0.0000	0.0000
Galacatan	0.0000	0.0000	0.0000	0.0000
Alpha-D-Glucose	0.0000	0.0000	0.0000	0.0000
Xylose	0.0000	0.0000	0.0000	0.0000
Arabinose	0.0000	0.0000	0.0000	0.0000
Mannose	0.0000	0.0000	0.0000	0.0000
Galactose	0.0000	0.0000	0.0000	0.0000
Ethanol	0.0007	0.0000	0.0000	0.0003
HMF	0.0000	0.0000	0.0000	0.0000
Furfural	0.0000	0.0010	0.0010	0.0006
Calcium Sulfate	0.0000	0.0000	0.0000	0.0000
Glycerol	0.0000	0.0000	0.0000	0.0000
Lignin	0.0000	0.0000	0.0000	0.0000
Soluble Solids	0.0000	0.0000	0.0000	0.0000
Ash	0.0000	0.0000	0.0000	0.0000
Cell Mass	0.0000	0.0000	0.0000	0.0000
Sulfuric Acid	0.0000	0.0000	0.0000	0.0000
CalciumHydroxide	0.0000	0.0000	0.0000	0.0000
Cellulase	0.0000	0.0000	0.0000	0.0000
Air	0.3287	0.8361	0.8361	0.6225
Nitrogen	0.0436	0.0898	0.0898	0.0704
Oxygen	0.0012	0.0000	0.0000	0.0005
Carbon Dioxide	0.6064	0.0417	0.0417	0.2795
Acetaldehyde	0.0001	0.0000	0.0000	0.0001
3-Mth-1-Butanol	0.0000	0.0003	0.0003	0.0002
Methane	0.0000	0.0000	0.0000	0.0000
Ammonia	0.0000	0.0000	0.0000	0.0000

FLOW SUMMARIES

Stream No.	8304
Stream Name	
Temp C	94.2993
Pres Pa	108000.0000
Enth kW	-2.2612E+005
Vapor mass fraction	0.00000
Total kg/h	45634.
Component mass fractions	
Water	0.3246
Cellulose	0.0839
Xylan	0.0038
Arabinan	0.0003
Mannan	0.0020
Galacatan	0.0006
Alpha-D-Glucose	0.0000
Xylose	0.0020
Arabinose	0.0002
Mannose	0.0000
Galactose	0.0000
Ethanol	0.0095
HMF	0.0000
Furfural	0.0010
Calcium Sulfate	0.0351
Glycerol	0.0073
Lignin	0.3814
Soluble Solids	0.0879
Ash	0.0032
Cell Mass	0.0570
Sulfuric Acid	0.0000
CalciumHydroxide	0.0001
Cellulase	0.0000
Air	0.0000
Nitrogen	0.0000
Oxygen	0.0000
Carbon Dioxide	0.0000
Acetaldehyde	0.0000
3-Mth-1-Butanol	0.0000
Methane	0.0000
Ammonia	0.0000

APPENDIX II
DISTILLATION AREA

Job Name: ETOH-2

Date: 07-12-94 Time: 09:35

FLOWSHEET SUMMARY

Equipment	Label	Stream Numbers
1	SCDS AS-601	6204 6206 -6212 -6209
2	SCDS AS-602	6212 -6215 -6213 -6214
3	HTXR TT-616	6410 6207 -6205 -6208
4	HTXR TT-627	6220 -6221
5	HTXR TT-615	6201 216 -6202 -6207
6	HTXR TT-613	6203 -6204
7	HTXR TT-622	6219 6222 -6220 -6223
8	HTXR TT-624	6223 -6224
9	HTXR TT-623	6106 6216 -6201 -6217
10	HTXR TT-626	6217 -6218
11	HTXR	6202 6210 -6203 -6225
12	HTXR TT-625	6205 6209 -6206 -6210
13	HTXR TT-628	6225 -6211

Stream Connections

Stream	Equipment From	Equipment To	Stream	Equipment From	Equipment To	Stream	Equipment From	Equipment To
216		5	6209	1	12	6219		7
6106		9	6210	12	11	6220	7	4
6201	9	5	6211	13		6221	4	
6202	5	11	6212	1	2	6222		7
6203	11	6	6213	2		6223	7	8
6204	6	1	6214	2		6224	8	
6205	3	12	6215	2		6225	11	13
6206	12	1	6216		9	6410		3
6207	5	3	6217	9	10			
6208	3		6218	10				

Equipment Calculation Sequence
7 8 9 10 4 5 3 11 6 1 12 2 13

Equipment Recycle Sequence
11 6 1 12

Recycle Cut Streams
6210 6206

Recycle Convergence Method: Direct Substitution

Max. loop iterations 40

Recycle Convergence Tolerance

Flow rate	1.000E-003
Temperature	1.000E-003
Pressure	1.000E-003
Enthalpy	1.000E-003
Vapor frac.	1.000E-003

Recycle calculation has converged.

COMPONENTS

	ID #	Name
1	62	Water
2	134	Ethanol
3	164	Furfural
4	268	Glycerol
5	128	Acetaldehyde

THERMODYNAMICS

K-value model : NRTL
No corrrection for vapor fugacity
Enthalpy model : Heat of Vaporization (Latent Heat)
Liquid density : Library

NRTL Parameters:

I	J	Bij	Bji	Alpha
1	2	670.441	-55.168	0.303
1	3	1584.604	-204.266	0.202
1	4	258.114	-274.349	1.011
1	5	662.993	-23.571	0.287
2	3	510.442	328.316	0.777
2	4	398.444	79.505	0.296
2	5	807.183	-650.026	0.311
3	4	1411.930	-16.983	0.350
3	5	-220.697	737.237	0.399
4	5	-431.380	1380.308	0.400

Overall Mass Balance

	kmol/h		kg/h	
	Input	Output	Input	Output
Water	29959.425	29959.425	539719.027	539719.027
Ethanol	4168.573	4168.573	192042.001	192042.001
Furfural	188.841	188.841	18145.000	18145.000
Glycerol	106.054	106.054	9767.000	9767.000
Acetaldehyde	6.674	6.674	294.000	294.000
Total	34429.564	34429.564	759966.970	759966.970

EQUIPMENT SUMMARIES

Scds Rigorous Distillation Summary

Equip. No.	1	2
Name	AS-601	AS-602
TOP pressure Pa	412000.0000	105000.0000
Cond press drop Pa	7000.0000	7000.0000
Colm press drop Pa	44100.0000	63000.0000
No. of stages	40	70
1st feed stage	5	62
2nd feed stage	18	0
Efficiency top stage	0.6000	0.6000
Efficiency bot stage	0.6000	0.6000
Select condenser mode:	1	1
Condenser spec.	2.0000	4.0000
Select reboiler mode:	6	6
Reboiler spec.	1.0000e-004	1.0000e-004
Rebl. comp i	2	2
Side product stage	0	2
Side product spec.		0.0040
Initial flag	1	1
Calc cond duty kW	-32638.0176	-28934.0176
Calc rebr duty kW	47600.8203	28087.9258

Heat Exchanger Summary

Equip. No.	3	4	5	6
Name	TT-616	TT-627	TT-615	TT-613
Pressure drop 1 Pa	69000.0000	3500.0000	69000.0000	69000.0000
Pressure drop 2 Pa			7000.0000	
T Out Str 1 C				120.0000
T Out Str 2 C				186.0000
Min Delta Temp C	5.0000		5.0000	
Heat Duty kW		5060.0000		
U W/m2-K				3975.0000
Calc Ht Duty kW	1270.0756	5060.0000	10802.0059	
LMTD C	11.4964		11.9533	
LMTD Corr F	1.0000		1.0000	

Equip. No.	7	8	9	10
Name	TT-622	TT-624	TT-623	TT-626
Pressure drop 1 Pa	3500.0000	3500.0000	69000.0000	3500.0000
Pressure drop 2 Pa	3500.0000		3500.0000	
Min Delta Temp C	5.0000		5.0000	
Heat Duty kW		-9610.0000		-9220.0000
Calc Ht Duty kW	23034.8770	-9610.0000	19710.1934	-9220.0000
LMTD C	7.3793		17.6771	
LMTD Corr F	1.0000		1.0000	

Equip. No.	11	12	13
Name		TT-625	TT-628
Pressure drop 1 Pa	69000.0000		69000.0000
Pressure drop 2 Pa	69000.0000		
T Out Str 1 C	120.0000	120.0000	113.8000

EQUIPMENT SUMMARIES

Calc Ht Duty kW	11904.5938	574.1960	-5599.5229
LMTD C	27.8922	40.1056	
LMTD Corr F	1.0000	1.0000	

STREAM PROPERTIES

Stream No.	216	6106	6201	6202
Name				
- - Overall - -				
Mass flow kg/h	18227.	448694.	448694.	448694.
Temp C	102.	37.	76.	97.
Pres Pa	108000.	653000.	584000.	515000.
Vapor mass fraction	1.000	0.0000	0.0000	0.0000
Enth kW	-6.545E+004	-1.881E+006	-1.861E+006	-1.851E+006
Std. sp gr , wtr = 1	1.004	0.993	0.993	0.993
Std. sp gr , air = 1	0.637	0.655	0.655	0.655
Average mol wt	18.	19.	19.	19.
Actual dens kg/m3	0.645	984.965	964.020	949.163
Actual vol m3/h	28253.	456.	465.	473.
RVP Pa	6749.542	8404.393	8404.393	8404.393

STREAM PROPERTIES

Stream No.	6203	6204	6205	6206
Name				
- - Overall - -				
Mass flow kg/h	448694.	448694.	19201.	19201.
Temp C	120.	120.	94.	120.
Pres Pa	446000.	377000.	336000.	336000.
Vapor mass fraction	0.0000	0.0000	0.0000	0.0000
Enth kW	-1.839E+006	-1.839E+006	-8.157E+004	-8.100E+004
Std. sp gr , wtr = 1	0.993	0.993	0.994	0.994
Std. sp gr , air = 1	0.655	0.655	0.633	0.633
Average mol wt	19.	19.	18.	18.
Actual dens kg/m3	930.703	930.703	953.736	933.836
Actual vol m3/h	482.	482.	20.	21.
RVP Pa	8404.393	8404.393	7588.541	7588.541

59.7 &
63.85

STREAM PROPERTIES

Stream No.	6207	6208	6209	6210
Name				
- - Overall - -				
Mass flow kg/h	18227.	18227.	435442.	435442.
Temp C	99.	59.	149.	148.
Pres Pa	101000.	101000.	463100.	463100.
Vapor mass fraction	0.040469	0.0000	0.0000	0.0000
Enth kW	-7.625E+004	-7.752E+004	-1.827E+006	-1.827E+006
Std. sp gr , wtr = 1	1.004	1.004	1.005	1.005
Std. sp gr , air = 1	0.637	0.637	0.636	0.636
Average mol wt	18.	18.	18.	18.
Actual dens kg/m3	15.842	986.939	922.109	923.129
Actual vol m3/h	1151.	18.	472.	472.
RVP Pa	6749.542	6749.542	6573.398	6573.398

STREAM PROPERTIES

Stream No.	6211	6212	6213	6214
Name				
- - Overall - -				
Mass flow kg/h	435442.	32453.	9661.	449.
Temp C	114.	121.	115.	81.
Pres Pa	325100.	412000.	175000.	112000.
Vapor mass fraction	0.0000	0.0000	0.0000	1.000
Enth kW	-1.845E+006	-7.826E+004	-3.883E+004	-678.8
Std. sp gr , wtr = 1	1.005	0.856	1.011	0.804
Std. sp gr , air = 1	0.636	1.078	0.662	1.469
Average mol wt	18.	31.	19.	43.
Actual dens kg/m3	952.171	753.905	953.821	1.654
Actual vol m3/h	457.	43.	10.	271.
RVP Pa	6573.398	14737.437	7022.444	15979.849

STREAM PROPERTIES

Stream No.	6215	6216	6217	6218
Name				
- - Overall - -				
Mass flow kg/h	22344.	111721.	111721.	111721.
Temp C	79.	81.	80.	79.
Pres Pa	105000.	112000.	108500.	105000.
Vapor mass fraction	0.0000	1.000	0.31793	0.0020308
Enth kW	-3.959E+004	-1.690E+005	-1.887E+005	-1.979E+005
Std. sp gr , wtr = 1	0.804	0.804	0.804	0.804
Std. sp gr , air = 1	1.469	1.469	1.469	1.469
Average mol wt	43.	43.	43.	43.
Actual dens kg/m3	741.740	1.654	5.034	377.776
Actual vol m3/h	30.	67559.	22193.	296.
RVP Pa	15979.849	15979.907	15979.907	15979.907

STREAM PROPERTIES

Stream No.	6219	6220	6221	6222
Name				
- - Overall - -				
Mass flow kg/h	64764.	64764.	64764.	97360.
Temp C	113.	114.	113.	124.
Pres Pa	174074.	170574.	167074.	375865.
Vapor mass fraction	0.0000	0.71456	0.85212	1.000
Enth kW	-2.291E+005	-2.061E+005	-2.010E+005	-2.021E+005
Std. sp gr , wtr = 1	1.029	1.029	1.029	0.856
Std. sp gr , air = 1	0.745	0.745	0.745	1.078
Average mol wt	22.	22.	22.	31.
Actual dens kg/m3	967.120	1.701	1.365	3.693
Actual vol m3/h	67.	38077.	47435.	26366.
RVP Pa	7307.829	7307.829	7307.829	14737.434

STREAM PROPERTIES

Stream No.	6223	6224	6225	6410
Name				
- - Overall - -				
Mass flow kg/h	97360.	97360.	435442.	19201.
Temp C	118.	118.	125.	37.
Pres Pa	372365.	368865.	394100.	405000.
Vapor mass fraction	0.34938	0.015210	0.0000	0.0000
Enth kW	-2.251E+005	-2.347E+005	-1.839E+006	-8.284E+004
Std. sp gr , wtr = 1	0.856	0.856	1.005	0.994
Std. sp gr , air = 1	1.078	1.078	0.636	0.633
Average mol wt	31.	31.	18.	18.
Actual dens kg/m3	11.961	205.898	943.328	986.325
Actual vol m3/h	8140.	473.	462.	19.
RVP Pa	14737.434	14737.434	6573.398	7588.541

FLOW SUMMARIES

Stream No.	216	6106	6201	6202
Stream Name				
Temp C	102.0000	37.0000	75.9000	97.0000
Pres Pa	108000.0000	653000.0000	584000.0000	515000.0000
Enth kW	-65453.	-1.8812E+006	-1.8615E+006	-1.8507E+006
Vapor mass fraction	1.0000	0.00000	0.00000	0.00000
Total kg/h	18227.	448694.	448694.	448694.
Component mass fractions				
Water	0.9702	0.9258	0.9258	0.9258
Ethanol	0.0000	0.0472	0.0472	0.0472
Furfural	0.0298	0.0051	0.0051	0.0051
Glycerol	0.0000	0.0218	0.0218	0.0218
Acetaldehyde	0.0000	0.0001	0.0001	0.0001

Stream No.	6203	6204	6205	6206
Stream Name				
Temp C	120.0000	120.0000	94.3970	120.0000
Pres Pa	446000.0000	377000.0000	336000.0000	336000.0000
Enth kW	-1.8388E+006	-1.8388E+006	-81572.	-80998.
Vapor mass fraction	0.00000	0.00000	0.00000	0.00000
Total kg/h	448694.	448694.	19201.	19201.
Component mass fractions				
Water	0.9258	0.9258	0.9725	0.9725
Ethanol	0.0472	0.0472	0.0253	0.0253
Furfural	0.0051	0.0051	0.0022	0.0022
Glycerol	0.0218	0.0218	0.0000	0.0000
Acetaldehyde	0.0001	0.0001	0.0000	0.0000

Stream No.	6207	6208	6209	6210
Stream Name				
Temp C	99.3970	59.0694	149.0977	147.9883
Pres Pa	101000.0000	101000.0000	463099.9688	463099.9688
Enth kW	-76255.	-77525.	-1.8265E+006	-1.8271E+006
Vapor mass fraction	0.0404689	0.00000	0.00000	0.00000
Total kg/h	18227.	18227.	435442.	435442.
Component mass fractions				
Water	0.9702	0.9702	0.9736	0.9736
Ethanol	0.0000	0.0000	0.0003	0.0003
Furfural	0.0298	0.0298	0.0037	0.0037
Glycerol	0.0000	0.0000	0.0224	0.0224
Acetaldehyde	0.0000	0.0000	0.0000	0.0000

FLOW SUMMARIES

Stream No.	6211	6212	6213	6214
Stream Name				
Temp C	113.8000	121.1335	114.8301	80.8839
Pres Pa	325100.0000	412000.0000	175000.0156	112000.0000
Enth kW	-1.8446E+006	-78256.	-38834.	-678.78
Vapor mass fraction	0.00000	0.00000	0.00000	1.0000
Total kg/h	435442.	32453.	9661.	449.
Component mass fractions				
Water	0.9736	0.3127	0.9251	0.0532
Ethanol	0.0003	0.6640	0.0002	0.9454
Furfural	0.0037	0.0222	0.0746	0.0000
Glycerol	0.0224	0.0000	0.0000	0.0000
Acetaldehyde	0.0000	0.0010	0.0000	0.0014

Stream No.	6215	6216	6217	6218
Stream Name				
Temp C	79.2165	80.9000	80.0626	79.2165
Pres Pa	105000.0000	112000.0000	108500.0000	105000.0000
Enth kW	-39590.	-1.6901E+005	-1.8873E+005	-1.9795E+005
Vapor mass fraction	0.00000	1.0000	0.317932	0.00203083
Total kg/h	22344.	111721.	111721.	111721.
Component mass fractions				
Water	0.0532	0.0532	0.0532	0.0532
Ethanol	0.9454	0.9454	0.9454	0.9454
Furfural	0.0000	0.0000	0.0000	0.0000
Glycerol	0.0000	0.0000	0.0000	0.0000
Acetaldehyde	0.0014	0.0015	0.0015	0.0015

Stream No.	6219	6220	6221	6222
Stream Name				
Temp C	113.5000	113.8849	113.4127	124.3000
Pres Pa	174074.0000	170574.0000	167074.0156	375864.8750
Enth kW	-2.2910E+005	-2.0606E+005	-2.0100E+005	-2.0207E+005
Vapor mass fraction	0.00000	0.714563	0.852115	1.0000
Total kg/h	64764.	64764.	64764.	97360.
Component mass fractions				
Water	0.7961	0.7961	0.7961	0.3127
Ethanol	0.0018	0.0018	0.0018	0.6640
Furfural	0.2021	0.2021	0.2021	0.0222
Glycerol	0.0000	0.0000	0.0000	0.0000
Acetaldehyde	0.0000	0.0000	0.0000	0.0010

FLOW SUMMARIES

Stream No.	6223	6224	6225	6410
Stream Name				
Temp C	118.5000	117.5343	124.7964	37.0000
Pres Pa	372364.8438	368864.8438	394099.9688	405000.0000
Enth kW	-2.2510E+005	-2.3471E+005	-1.8390E+006	-82842.
Vapor mass fraction	0.349379	0.0152104	0.00000	0.00000
Total kg/h	97360.	97360.	435442.	19201.
Component mass fractions				
Water	0.3127	0.3127	0.9736	0.9725
Ethanol	0.6640	0.6640	0.0003	0.0253
Furfural	0.0222	0.0222	0.0037	0.0022
Glycerol	0.0000	0.0000	0.0224	0.0000
Acetaldehyde	0.0010	0.0010	0.0000	0.0000

DISTILLATION PROFILE

Unit type : SCDS Unit name: AS-601 Eqp # 1

Stg	Temp C	Pres Pa (59.9 psi)	* Net Flows * Liquid kmol/h	Vapor kmol/h	Feeds kmol/h	Product kmol/h	Duties kW (KJ/s)
1	121.1412	000.00	2078.82			1039.41	-3.264E+004
2	124.3419	000.00	2025.08	3118.23			
3	130.6420	160.50	1995.41	3064.49			
4	136.8421	321.03	2000.02	3034.82			
5	139.4422	481.56	26628.23	3039.43	23649.85		
6	139.6423	642.09	26635.50	4017.79			
7	139.7424	802.59	26643.07	4025.06			
8	139.9425	963.12	26651.07	4032.64			
9	140.1427	123.69	26659.61	4040.64			
10	140.4428	284.22	26668.72	4049.17			
11	140.6429	444.72	26678.54	4058.29			
12	140.9430	605.25	26689.03	4068.10			
13	141.2431	765.78	26700.36	4078.59			
14	141.5432	926.31	26712.54	4089.92			
15	141.8434	086.81	26725.55	4102.10			
16	142.2435	247.34	26739.47	4115.11			
17	142.6436	407.88	26754.16	4129.02			
18	143.0437	568.41	27866.65	4143.72	1047.50		
19	143.4438	728.91	27882.72	4208.70			
20	143.8439	889.44	27899.39	4224.78			
21	144.2441	049.97	27916.34	4241.45			
22	144.6442	210.50	27933.38	4258.40			
23	145.1443	371.03	27950.22	4275.44			
24	145.5444	531.53	27966.70	4292.28			
25	145.8445	692.06	27982.53	4308.76			
26	146.2446	852.59	27997.57	4324.58			
27	146.5448	013.12	28011.76	4339.63			
28	146.8449	173.69	28024.97	4353.82			
29	147.1450	334.22	28037.23	4367.04			
30	147.4451	494.75	28048.60	4379.29			
31	147.6452	655.25	28059.14	4390.66			
32	147.8453	815.78	28068.89	4401.20			
33	148.0454	976.31	28077.99	4410.95			
34	148.2456	136.84	28086.53	4420.05			
35	148.3457	297.34	28094.63	4428.59			
36	148.5458	457.88	28102.35	4436.70			
37	148.6459	618.41	28109.84	4444.42			
38	148.8460	778.94	28117.20	4451.91			
39	148.9461	939.44	28124.33	4459.26			
40	149.1463	099.97		4466.40		23657.93	4.76E+004

$\frac{KJ}{sec} \times \frac{1\,Kcal}{4.1840\,KJ} \times \frac{1000\,cal}{Kcal} = \boxed{7.801 \times 10^{6}\ \frac{cal}{sec}}$

$\boxed{1.138 \times 10^{7}\ \frac{cal}{sec}}$

Reflux ratio 2.000

TRAY PROPERTIES

Unit type : SCDS Unit name: AS-601 Eqp # 1

LIQUID

Stg	kg/h	Average mol wt	Actual vol rate m3/h	Actual density kg/m3	viscosity N-s/m2	Thermal conduct. W/m-K	Surface tension J/m2
1	64907	31.22	86.09	753.91	0.0002	0.211	0.021
2	51890	25.62	64.83	800.40	0.0002	0.294	0.027
3	41825	20.96	48.40	864.06	0.0002	0.457	0.037
4	38564	19.28	43.09	894.96	0.0002	0.568	0.044
5	509891	19.15	562.22	906.92	0.0002	0.596	0.046
6	509796	19.14	562.04	907.04	0.0002	0.597	0.046
7	509659	19.13	561.79	907.20	0.0002	0.598	0.046
8	509476	19.12	561.46	907.42	0.0002	0.599	0.046
9	509243	19.10	561.03	907.69	0.0002	0.601	0.046
10	508953	19.08	560.51	908.02	0.0002	0.602	0.046
11	508603	19.06	559.88	908.42	0.0002	0.604	0.046
12	508188	19.04	559.13	908.89	0.0002	0.606	0.046
13	507710	19.02	558.27	909.44	0.0002	0.609	0.046
14	507168	18.99	557.29	910.05	0.0002	0.612	0.046
15	506565	18.95	556.21	910.74	0.0002	0.615	0.046
16	505909	18.92	555.03	911.49	0.0002	0.618	0.047
17	505207	18.88	553.78	912.30	0.0002	0.622	0.047
18	524774	18.83	574.79	912.99	0.0002	0.626	0.047
19	524051	18.79	573.47	913.83	0.0002	0.630	0.047
20	523320	18.76	572.13	914.68	0.0002	0.633	0.047
21	522597	18.72	570.81	915.54	0.0002	0.637	0.047
22	521898	18.68	569.52	916.38	0.0002	0.641	0.048
23	521238	18.65	568.31	917.18	0.0002	0.645	0.048
24	520630	18.62	567.18	917.93	0.0002	0.648	0.048
25	520080	18.59	566.16	918.61	0.0002	0.652	0.048
26	519593	18.56	565.25	919.22	0.0002	0.655	0.048
27	519172	18.53	564.46	919.76	0.0002	0.657	0.048
28	518813	18.51	563.79	920.22	0.0002	0.660	0.048
29	518512	18.49	563.23	920.61	0.0002	0.662	0.048
30	518264	18.48	562.76	920.92	0.0002	0.663	0.049
31	518061	18.46	562.39	921.18	0.0002	0.665	0.049
32	517895	18.45	562.09	921.38	0.0002	0.666	0.049
33	517758	18.44	561.85	921.52	0.0002	0.667	0.049
34	517640	18.43	561.66	921.63	0.0002	0.668	0.049
35	517533	18.42	561.51	921.69	0.0002	0.669	0.049
36	517423	18.41	561.37	921.71	0.0002	0.670	0.049
37	517301	18.40	561.24	921.70	0.0002	0.671	0.049
38	517152	18.39	561.11	921.66	0.0002	0.672	0.049
39	516955	18.38	560.94	921.59	0.0002	0.672	0.049
40	435441	18.41	472.22	922.11	0.0002	0.673	0.049

VAPOR

Stg	kg/h	Average mol wt	Actual vol rate m3/h	Actual density kg/m3	viscosity N-s/m2	Thermal conduct. W/m-K	Compr. factor
1	0	0.00	0	0.00	0.0000	0.000	0.000
2	97360	31.22	23542	4.14	0.0000	0.026	0.957
3	84343	27.52	23572	3.58	0.0000	0.027	0.963
4	74278	24.48	23746	3.13	0.0000	0.027	0.967

TRAY PROPERTIES

5	71017	23.37	23901	2.97	0.0000	0.028	0.969
6	93651	23.31	31520	2.97	0.0000	0.028	0.969
7	93555	23.24	31505	2.97	0.0000	0.028	0.969
8	93418	23.17	31493	2.97	0.0000	0.028	0.969
9	93236	23.07	31487	2.96	0.0000	0.028	0.969
10	93002	22.97	31486	2.95	0.0000	0.028	0.969
11	92712	22.85	31493	2.94	0.0000	0.028	0.969
12	92362	22.70	31507	2.93	0.0000	0.028	0.969
13	91948	22.54	31529	2.92	0.0000	0.028	0.969
14	91469	22.36	31561	2.90	0.0000	0.028	0.969
15	90927	22.17	31601	2.88	0.0000	0.028	0.969
16	90324	21.95	31650	2.85	0.0000	0.028	0.970
17	89668	21.72	31708	2.83	0.0000	0.028	0.970
18	88967	21.47	31774	2.80	0.0000	0.028	0.970
19	89333	21.23	32225	2.77	0.0000	0.028	0.970
20	88609	20.97	32302	2.74	0.0000	0.028	0.970
21	87878	20.72	32383	2.71	0.0000	0.028	0.971
22	87155	20.47	32467	2.68	0.0000	0.029	0.971
23	86457	20.22	32550	2.66	0.0000	0.029	0.971
24	85797	19.99	32630	2.63	0.0000	0.029	0.971
25	85188	19.77	32706	2.60	0.0000	0.029	0.971
26	84638	19.57	32773	2.58	0.0000	0.029	0.971
27	84152	19.39	32833	2.56	0.0000	0.029	0.972
28	83730	19.23	32882	2.55	0.0000	0.029	0.972
29	83371	19.09	32922	2.53	0.0000	0.029	0.972
30	83070	18.97	32952	2.52	0.0000	0.029	0.972
31	82822	18.86	32972	2.51	0.0000	0.029	0.972
32	82619	18.77	32985	2.50	0.0000	0.029	0.972
33	82453	18.69	32989	2.50	0.0000	0.029	0.972
34	82316	18.62	32988	2.50	0.0000	0.029	0.972
35	82199	18.56	32981	2.49	0.0000	0.029	0.972
36	82091	18.50	32969	2.49	0.0000	0.029	0.972
37	81982	18.45	32955	2.49	0.0000	0.029	0.972
38	81860	18.39	32938	2.49	0.0000	0.029	0.972
39	81711	18.32	32920	2.48	0.0000	0.029	0.972
40	81514	18.25	32905	2.48	0.0000	0.029	0.972

TRAY COMPOSITIONS

Unit type : SCDS Unit name: AS-601 Eqp # 1

Stage # 1 121.13 C 412000.00 Pa

	V Mass frac	L Mass frac	K
Water	0.00000	0.31273	0.00000
Ethanol	0.00000	0.66403	0.00000
Furfural	0.00000	0.02222	0.00000
Glycerol	0.00000	0.00000	0.00000
Acetaldehyde	0.00000	0.00102	0.00000
Total kg/h	0.0000	64906.8002	

Stage # 2 124.33 C 419000.00 Pa

	V Mass frac	L Mass frac	K
Water	0.31273	0.51956	0.73345
Ethanol	0.66403	0.45851	1.76470
Furfural	0.02222	0.02152	1.25825
Glycerol	0.00000	0.00000	0.30595
Acetaldehyde	0.00102	0.00041	3.05808
Total kg/h	97360.2003	51889.9395	

Stage # 3 130.58 C 420160.50 Pa

	V Mass frac	L Mass frac	K
Water	0.43998	0.77437	0.74607
Ethanol	0.53759	0.21017	3.35874
Furfural	0.02179	0.01536	1.86269
Glycerol	0.00000	0.00000	0.27840
Acetaldehyde	0.00064	0.00010	8.33137
Total kg/h	84343.3325	41824.7815	

Stage # 4 136.83 C 421321.03 Pa

	V Mass frac	L Mass frac	K
Water	0.57267	0.89522	0.81201
Ethanol	0.40847	0.09550	5.42916
Furfural	0.01836	0.00923	2.52400
Glycerol	0.00000	0.00001	0.26930
Acetaldehyde	0.00050	0.00004	15.65056
Total kg/h	74278.1745	38563.5480	

Stage # 5 139.39 C 422481.56 Pa

	V Mass frac	L Mass frac	K
Water	0.62903	0.91091	0.84262
Ethanol	0.35531	0.06397	6.77736
Furfural	0.01517	0.00592	3.12818
Glycerol	0.00001	0.01916	0.00038
Acetaldehyde	0.00049	0.00004	13.84869
Total kg/h	71016.9446	509891.3478	

Stage # 6 139.56 C 423642.09 Pa

	V Mass frac	L Mass frac	K
Water	0.63214	0.91164	0.84446
Ethanol	0.35231	0.06324	6.78484
Furfural	0.01531	0.00595	3.13610
Glycerol	0.00001	0.01916	0.00039
Acetaldehyde	0.00023	0.00002	13.87133
Total kg/h	93650.7786	509795.5831	

TRAY COMPOSITIONS

Stage # 7	139.74 C	424802.59 Pa	
	V Mass frac	L Mass frac	K
Water	0.63580	0.91250	0.84661
Ethanol	0.34861	0.06234	6.79447
Furfural	0.01548	0.00598	3.14544
Glycerol	0.00001	0.01916	0.00039
Acetaldehyde	0.00011	0.00001	13.90136
Total kg/h	93555.0281	509658.9384	

Stage # 8	139.93 C	425963.12 Pa	
	V Mass frac	L Mass frac	K
Water	0.64013	0.91354	0.84913
Ethanol	0.34414	0.06127	6.80677
Furfural	0.01567	0.00602	3.15645
Glycerol	0.00001	0.01917	0.00039
Acetaldehyde	0.00005	0.00000	13.94012
Total kg/h	93418.3975	509476.2541	

Stage # 9	140.13 C	427123.69 Pa	
	V Mass frac	L Mass frac	K
Water	0.64524	0.91476	0.85207
Ethanol	0.33882	0.05999	6.82218
Furfural	0.01590	0.00606	3.16929
Glycerol	0.00001	0.01918	0.00040
Acetaldehyde	0.00003	0.00000	13.98889
Total kg/h	93235.6211	509242.7674	

Stage # 10	140.36 C	428284.22 Pa	
	V Mass frac	L Mass frac	K
Water	0.65127	0.91619	0.85551
Ethanol	0.33255	0.05850	6.84117
Furfural	0.01616	0.00611	3.18410
Glycerol	0.00001	0.01919	0.00040
Acetaldehyde	0.00001	0.00000	14.04897
Total kg/h	93002.1273	508952.6384	

Stage # 11	140.60 C	429444.72 Pa	
	V Mass frac	L Mass frac	K
Water	0.65831	0.91785	0.85947
Ethanol	0.32521	0.05678	6.86411
Furfural	0.01647	0.00616	3.20091
Glycerol	0.00001	0.01920	0.00041
Acetaldehyde	0.00001	0.00000	14.12150
Total kg/h	92711.9983	508602.7486	

Stage # 12	140.87 C	430605.25 Pa	
	V Mass frac	L Mass frac	K
Water	0.66647	0.91976	0.86401
Ethanol	0.31671	0.05480	6.89144
Furfural	0.01681	0.00623	3.21969
Glycerol	0.00001	0.01922	0.00041
Acetaldehyde	0.00000	0.00000	14.20759
Total kg/h	92362.1581	508188.3352	

Stage # 13 141.16 C 431765.78 Pa

TRAY COMPOSITIONS

	V Mass frac	L Mass frac	K
Water	0.67585	0.92191	0.86915
Ethanol	0.30695	0.05256	6.92341
Furfural	0.01719	0.00629	3.24028
Glycerol	0.00001	0.01924	0.00042
Acetaldehyde	0.00000	0.00000	14.30797
Total kg/h	91947.6881	507709.8520	

Stage # 14 141.48 C 432926.31 Pa

	V Mass frac	L Mass frac	K
Water	0.68651	0.92431	0.87489
Ethanol	0.29587	0.05007	6.96023
Furfural	0.01761	0.00636	3.26237
Glycerol	0.00001	0.01926	0.00042
Acetaldehyde	0.00000	0.00000	14.42309
Total kg/h	91469.2332	507167.9225	

Stage # 15 141.82 C 434086.81 Pa

	V Mass frac	L Mass frac	K
Water	0.69851	0.92696	0.88124
Ethanol	0.28343	0.04734	7.00204
Furfural	0.01805	0.00643	3.28548
Glycerol	0.00001	0.01928	0.00043
Acetaldehyde	0.00000	0.00000	14.55300
Total kg/h	90927.2612	506564.8147	

Stage # 16 142.18 C 435247.34 Pa

	V Mass frac	L Mass frac	K
Water	0.71184	0.92982	0.88815
Ethanol	0.26964	0.04438	7.04869
Furfural	0.01851	0.00649	3.30890
Glycerol	0.00001	0.01931	0.00044
Acetaldehyde	0.00000	0.00000	14.69695
Total kg/h	90324.1605	505908.7501	

Stage # 17 142.57 C 436407.88 Pa

	V Mass frac	L Mass frac	K
Water	0.72644	0.93288	0.89554
Ethanol	0.25458	0.04124	7.09993
Furfural	0.01897	0.00655	3.33165
Glycerol	0.00001	0.01933	0.00044
Acetaldehyde	0.00000	0.00000	14.85365
Total kg/h	89668.0675	505207.3262	

Stage # 18 142.97 C 437568.41 Pa

	V Mass frac	L Mass frac	K
Water	0.74221	0.93694	0.90316
Ethanol	0.23839	0.03793	7.16484
Furfural	0.01939	0.00651	3.39429
Glycerol	0.00001	0.01861	0.00046
Acetaldehyde	0.00000	0.00000	15.10466
Total kg/h	88966.6365	524774.2237	

Stage # 19 143.38 C 438728.91 Pa

	V Mass frac	L Mass frac	K
Water	0.75831	0.94006	0.91099

TRAY COMPOSITIONS

Ethanol	0.22162	0.03469	7.21468
Furfural	0.02006	0.00661	3.42575
Glycerol	0.00001	0.01864	0.00047
Acetaldehyde	0.00000	0.00000	15.27143
Total kg/h	89332.5580	524050.7439	

Stage # 20	143.79 C	439889.44 Pa	
	V Mass frac	L Mass frac	K
Water	0.77529	0.94324	0.91906
Ethanol	0.20394	0.03138	7.26646
Furfural	0.02076	0.00671	3.45745
Glycerol	0.00001	0.01866	0.00048
Acetaldehyde	0.00000	0.00000	15.44503
Total kg/h	88609.0214	523319.9499	

Stage # 21	144.22 C	441049.97 Pa	
	V Mass frac	L Mass frac	K
Water	0.79287	0.94642	0.92721
Ethanol	0.18564	0.02807	7.31905
Furfural	0.02148	0.00681	3.48876
Glycerol	0.00001	0.01869	0.00049
Acetaldehyde	0.00000	0.00000	15.62184
Total kg/h	87878.2629	522596.8670	

Stage # 22	144.64 C	442210.50 Pa	
	V Mass frac	L Mass frac	K
Water	0.81071	0.94954	0.93527
Ethanol	0.16708	0.02483	7.37116
Furfural	0.02220	0.00691	3.51902
Glycerol	0.00001	0.01872	0.00050
Acetaldehyde	0.00000	0.00000	15.79797
Total kg/h	87155.1587	521898.3914	

Stage # 23	145.05 C	443371.03 Pa	
	V Mass frac	L Mass frac	K
Water	0.82846	0.95254	0.94309
Ethanol	0.14862	0.02172	7.42146
Furfural	0.02291	0.00700	3.54764
Glycerol	0.00001	0.01874	0.00051
Acetaldehyde	0.00000	0.00000	15.96946
Total kg/h	86456.6831	521238.2444	

Stage # 24	145.45 C	444531.53 Pa	
	V Mass frac	L Mass frac	K
Water	0.84575	0.95537	0.95053
Ethanol	0.13066	0.01878	7.46861
Furfural	0.02359	0.00709	3.57406
Glycerol	0.00001	0.01876	0.00052
Acetaldehyde	0.00000	0.00000	16.13260
Total kg/h	85796.5786	520629.9203	

Stage # 25	145.83 C	445692.06 Pa	
	V Mass frac	L Mass frac	K
Water	0.86225	0.95798	0.95746
Ethanol	0.11352	0.01608	7.51149
Furfural	0.02422	0.00716	3.59784

TRAY COMPOSITIONS

Glycerol	0.00001	0.01878	0.00053
Acetaldehyde	0.00000	0.00000	16.28442
Total kg/h	85188.2475	520079.8829	

Stage # 26	146.19 C	446852.59 Pa	
	V Mass frac	L Mass frac	K
Water	0.87770	0.96036	0.96381
Ethanol	0.09750	0.01362	7.54909
Furfural	0.02479	0.00723	3.61865
Glycerol	0.00001	0.01880	0.00054
Acetaldehyde	0.00000	0.00000	16.42257
Total kg/h	84638.1250	519593.2350	

Stage # 27	146.52 C	448013.12 Pa	
	V Mass frac	L Mass frac	K
Water	0.89190	0.96248	0.96953
Ethanol	0.08280	0.01143	7.58060
Furfural	0.02529	0.00728	3.63621
Glycerol	0.00001	0.01881	0.00055
Acetaldehyde	0.00000	0.00000	16.54562
Total kg/h	84151.5905	519171.7910	

Stage # 28	146.83 C	449173.69 Pa	
	V Mass frac	L Mass frac	K
Water	0.90473	0.96436	0.97460
Ethanol	0.06956	0.00950	7.60539
Furfural	0.02571	0.00732	3.65033
Glycerol	0.00001	0.01883	0.00056
Acetaldehyde	0.00000	0.00000	16.65303
Total kg/h	83730.1819	518812.5458	

Stage # 29	147.11 C	450334.22 Pa	
	V Mass frac	L Mass frac	K
Water	0.91615	0.96599	0.97903
Ethanol	0.05782	0.00783	7.62290
Furfural	0.02602	0.00734	3.66083
Glycerol	0.00001	0.01884	0.00056
Acetaldehyde	0.00000	0.00000	16.74493
Total kg/h	83370.9934	518511.6440	

Stage # 30	147.36 C	451494.75 Pa	
	V Mass frac	L Mass frac	K
Water	0.92620	0.96741	0.98286
Ethanol	0.04756	0.00640	7.63258
Furfural	0.02623	0.00734	3.66748
Glycerol	0.00001	0.01885	0.00057
Acetaldehyde	0.00000	0.00000	16.82208
Total kg/h	83070.0065	518263.5289	

Stage # 31	147.59 C	452655.25 Pa	
	V Mass frac	L Mass frac	K
Water	0.93496	0.96864	0.98614
Ethanol	0.03871	0.00518	7.63373
Furfural	0.02632	0.00733	3.66994
Glycerol	0.00001	0.01885	0.00058
Acetaldehyde	0.00000	0.00000	16.88556

TRAY COMPOSITIONS

Total kg/h	82821.9057	518060.8866

Stage # 32	147.80 C	453815.78 Pa	
	V Mass frac	L Mass frac	K
Water	0.94256	0.96970	0.98893
Ethanol	0.03117	0.00416	7.62537
Furfural	0.02626	0.00728	3.66768
Glycerol	0.00001	0.01886	0.00058
Acetaldehyde	0.00000	0.00000	16.93677
Total kg/h	82619.2987	517894.8151	

Stage # 33	148.00 C	454976.31 Pa	
	V Mass frac	L Mass frac	K
Water	0.94916	0.97062	0.99130
Ethanol	0.02480	0.00331	7.60588
Furfural	0.02603	0.00721	3.65981
Glycerol	0.00001	0.01887	0.00059
Acetaldehyde	0.00000	0.00000	0.00000
Total kg/h	82453.2627	517757.6601	

Stage # 34	148.17 C	456136.84 Pa	
	V Mass frac	L Mass frac	K
Water	0.95492	0.97143	0.99330
Ethanol	0.01947	0.00260	7.57272
Furfural	0.02560	0.00710	3.64493
Glycerol	0.00001	0.01887	0.00059
Acetaldehyde	0.00000	0.00000	0.00000
Total kg/h	82316.1927	517640.0095	

Stage # 35	148.34 C	457297.34 Pa	
	V Mass frac	L Mass frac	K
Water	0.96004	0.97218	0.99501
Ethanol	0.01503	0.00201	7.52168
Furfural	0.02492	0.00693	3.62080
Glycerol	0.00001	0.01887	0.00060
Acetaldehyde	0.00000	0.00000	0.00000
Total kg/h	82198.5280	517532.5648	

Stage # 36	148.49 C	458457.88 Pa	
	V Mass frac	L Mass frac	K
Water	0.96471	0.97288	0.99648
Ethanol	0.01137	0.00153	7.44561
Furfural	0.02391	0.00671	3.58372
Glycerol	0.00001	0.01888	0.00060
Acetaldehyde	0.00000	0.00000	0.00000
Total kg/h	82090.9983	517423.3058	

Stage # 37	148.64 C	459618.41 Pa	
	V Mass frac	L Mass frac	K
Water	0.96915	0.97359	0.99778
Ethanol	0.00835	0.00114	7.33167
Furfural	0.02249	0.00639	3.52746
Glycerol	0.00001	0.01888	0.00061
Acetaldehyde	0.00000	0.00000	0.00000
Total kg/h	81981.8101	517301.3461	

TRAY COMPOSITIONS

Stage # 38	148.77 C	460778.94 Pa	
	V Mass frac	L Mass frac	K
Water	0.97359	0.97433	0.99896
Ethanol	0.00589	0.00082	7.15485
Furfural	0.02052	0.00596	3.44075
Glycerol	0.00001	0.01889	0.00062
Acetaldehyde	0.00000	0.00000	0.00000
Total kg/h	81859.8575	517152.2276	

Stage # 39	148.91 C	461939.44 Pa	
	V Mass frac	L Mass frac	K
Water	0.97829	0.97516	1.00008
Ethanol	0.00387	0.00056	6.86012
Furfural	0.01783	0.00538	3.30143
Glycerol	0.00001	0.01890	0.00065
Acetaldehyde	0.00000	0.00000	0.00000
Total kg/h	81710.8099	516955.4820	

Stage # 40	149.10 C	463099.97 Pa	
	V Mass frac	L Mass frac	K
Water	0.98356	0.97359	1.00172
Ethanol	0.00223	0.00025	8.83423
Furfural	0.01420	0.00373	3.77033
Glycerol	0.00001	0.02243	0.00061
Acetaldehyde	0.00000	0.00000	0.00000
Total kg/h	81514.0997	435441.4177	

SIEVE TRAY SIZING

Equip. 1 Tray No. 2

Tray Loadings	Vapor	Liquid
	84343.332 kg/h	51889.939 kg/h
	23572.361 m3/h	64.830 m3/h
Density	3.578 kg/m3	800.399 kg/m3
Tower internal diameter, m	.....	2.743
Tray spacing, m	.....	0.610
No. of tray liquid passes	.....	1
Downcomer dimension,	Width m / Length m	Area m2
Side	0.502 / 2.121	0.740
Avg. weir length m	.....	2.121
Weir height, m	.....	0.051
Flow path length m	.....	1.740
Flow path width m	.....	2.546
Tray area, m2	.....	5.910
Tray active area m2	.....	4.430
% flood	.....	74.316
Fractional entrainment	.....	0.057
Aeration factor	.....	0.583
Minimum (Weeping) vapor flow kg/h	.....	44804.270
Tray press loss, m	.....	0.106
Tray press loss, Pa	.....	832.540
Downcomer clearance m	.....	0.076
Downcomer backup m	.....	0.187
Downcomer residence time, sec	.....	7.686
Actual tray efficiency (O'Connell)	.....	0.538
Actual tray efficiency (Chu)	.....	0.456

Equip. 1 Tray No. 3

Tray Loadings	Vapor	Liquid
	74278.174 kg/h	41824.781 kg/h
	23746.344 m3/h	48.405 m3/h
Density	3.128 kg/m3	864.061 kg/m3
Tower internal diameter, m	.....	2.438
Tray spacing, m	.....	0.610
No. of tray liquid passes	.....	1
Downcomer dimension,	Width m / Length m	Area m2
Side	0.444 / 1.883	0.582
Avg. weir length m	.....	1.883
Weir height, m	.....	0.051
Flow path length m	.....	1.549
Flow path width m	.....	2.263
Tray area, m2	.....	4.670
Tray active area m2	.....	3.506
% flood	.....	78.865
Fractional entrainment	.....	0.085
Aeration factor	.....	0.575
Minimum (Weeping) vapor flow kg/h	.....	33920.601
Tray press loss, m	.....	0.123
Tray press loss, Pa	.....	1039.969
Downcomer clearance m	.....	0.076
Downcomer backup m	.....	0.200

SIEVE TRAY SIZING

Downcomer residence time, sec	8.660
Actual tray efficiency (O'Connell)	0.466
Actual tray efficiency (Chu)	0.394

Equip. 1 Tray No. 4

Tray Loadings	Vapor	Liquid
	71016.945 kg/h	38563.548 kg/h
	23901.002 m3/h	43.090 m3/h
Density	2.971 kg/m3	894.958 kg/m3
Tower internal diameter, m		2.438
Tray spacing, m		0.610
No. of tray liquid passes		1
Downcomer dimension,	Width m / Length m	Area m2
Side	0.444 / 1.883	0.582
Avg. weir length m		1.883
Weir height, m		0.051
Flow path length m		1.549
Flow path width m		2.263
Tray area, m2		4.670
Tray active area m2		3.506
% flood		73.382
Fractional entrainment		0.071
Aeration factor		0.576
Minimum (Weeping) vapor flow kg/h		33301.065
Tray press loss, m		0.116
Tray press loss, Pa		1020.663
Downcomer clearance m		0.076
Downcomer backup m		0.191
Downcomer residence time, sec		9.308
Actual tray efficiency (O'Connell)		0.441
Actual tray efficiency (Chu)		0.372

Equip. 1 Tray No. 5

Tray Loadings	Vapor	Liquid
	93650.779 kg/h	509891.348 kg/h
	31520.470 m3/h	562.224 m3/h
Density	2.971 kg/m3	906.919 kg/m3
Tower internal diameter, m		3.353
Tray spacing, m		0.610
No. of tray liquid passes		1
Downcomer dimension,	Width m / Length m	Area m2
Side	0.597 / 2.565	1.064
Avg. weir length m		2.565
Weir height, m		0.051
Flow path length m		2.159
Flow path width m		3.104
Tray area, m2		8.829
Tray active area m2		6.701
% flood		75.812
Fractional entrainment		0.005
Aeration factor		0.595
Minimum (Weeping) vapor flow kg/h		80818.544
Tray press loss, m		0.131
Tray press loss, Pa		1166.667

SIEVE TRAY SIZING

Downcomer clearance m	0.076
Downcomer backup m	0.396
Downcomer residence time, sec	2.700
Actual tray efficiency (O'Connell)	0.435
Actual tray efficiency (Chu)	0.734

Equip. 1 Tray No. 6

Tray Loadings	Vapor	Liquid
	93555.028 kg/h	509795.583 kg/h
	31504.809 m3/h	562.043 m3/h
Density	2.970 kg/m3	907.039 kg/m3
Tower internal diameter, m		3.353
Tray spacing, m		0.610
No. of tray liquid passes		1
Downcomer dimension,	Width m / Length m	Area m2
Side	0.597 / 2.565	1.064
Avg. weir length m		2.565
Weir height, m		0.051
Flow path length m		2.159
Flow path width m		3.104
Tray area, m2		8.829
Tray active area m2		6.701
% flood		75.755
Fractional entrainment		0.005
Aeration factor		0.595
Minimum (Weeping) vapor flow kg/h		80796.828
Tray press loss, m		0.131
Tray press loss, Pa		1166.253
Downcomer clearance m		0.076
Downcomer backup m		0.396
Downcomer residence time, sec		2.700
Actual tray efficiency (O'Connell)		0.435
Actual tray efficiency (Chu)		0.733

Equip. 1 Tray No. 7

Tray Loadings	Vapor	Liquid
	93418.398 kg/h	509658.938 kg/h
	31493.193 m3/h	561.791 m3/h
Density	2.966 kg/m3	907.203 kg/m3
Tower internal diameter, m		3.353
Tray spacing, m		0.610
No. of tray liquid passes		1
Downcomer dimension,	Width m / Length m	Area m2
Side	0.597 / 2.565	1.064
Avg. weir length m		2.565
Weir height, m		0.051
Flow path length m		2.159
Flow path width m		3.104
Tray area, m2		8.829
Tray active area m2		6.701
% flood		75.685
Fractional entrainment		0.005
Aeration factor		0.595
Minimum (Weeping) vapor flow kg/h		80752.043

SIEVE TRAY SIZING

Tray press loss, m	0.131
Tray press loss, Pa	1165.747
Downcomer clearance m	0.076
Downcomer backup m	0.396
Downcomer residence time, sec	2.700
Actual tray efficiency (O'Connell)	0.435
Actual tray efficiency (Chu)	0.733

Equip. 1 Tray No. 8

Tray Loadings	Vapor	Liquid
	93235.621 kg/h	509476.254 kg/h
	31486.701 m3/h	561.457 m3/h
Density	2.961 kg/m3	907.417 kg/m3
Tower internal diameter, m		3.353
Tray spacing, m		0.610
No. of tray liquid passes		1
Downcomer dimension,	Width m / Length m	Area m2
Side	0.597 / 2.565	1.064
Avg. weir length m		2.565
Weir height, m		0.051
Flow path length m		2.159
Flow path width m		3.104
Tray area, m2		8.829
Tray active area m2		6.701
% flood		75.598
Fractional entrainment		0.005
Aeration factor		0.595
Minimum (Weeping) vapor flow kg/h		80680.305
Tray press loss, m		0.131
Tray press loss, Pa		1165.143
Downcomer clearance m		0.076
Downcomer backup m		0.396
Downcomer residence time, sec		2.700
Actual tray efficiency (O'Connell)		0.434
Actual tray efficiency (Chu)		0.732

Equip. 1 Tray No. 9

Tray Loadings	Vapor	Liquid
	93002.127 kg/h	509242.767 kg/h
	31486.480 m3/h	561.033 m3/h
Density	2.954 kg/m3	907.687 kg/m3
Tower internal diameter, m		3.353
Tray spacing, m		0.610
No. of tray liquid passes		1
Downcomer dimension,	Width m / Length m	Area m2
Side	0.597 / 2.565	1.064
Avg. weir length m		2.565
Weir height, m		0.051
Flow path length m		2.159
Flow path width m		3.104
Tray area, m2		8.829
Tray active area m2		6.701
% flood		75.492
Fractional entrainment		0.005

SIEVE TRAY SIZING

Aeration factor	.....	0.595
Minimum (Weeping) vapor flow kg/h	.....	80578.098
Tray press loss, m	.....	0.131
Tray press loss, Pa	.....	1164.438
Downcomer clearance m	.....	0.076
Downcomer backup m	.....	0.396
Downcomer residence time, sec	.....	2.700
Actual tray efficiency (O'Connell)	.....	0.434
Actual tray efficiency (Chu)	.....	0.731

Equip. 1 Tray No. 10

Tray Loadings	Vapor	Liquid
	92711.998 kg/h	508952.638 kg/h
	31492.964 m3/h	560.508 m3/h
Density	2.944 kg/m3	908.020 kg/m3
Tower internal diameter, m	.....	3.353
Tray spacing, m	.....	0.610
No. of tray liquid passes	.....	1
Downcomer dimension,	Width m / Length m	Area m2
Side	0.597 / 2.565	1.064
Avg. weir length m	.....	2.565
Weir height, m	.....	0.051
Flow path length m	.....	2.159
Flow path width m	.....	3.104
Tray area, m2	.....	8.829
Tray active area m2	.....	6.701
% flood	.....	75.366
Fractional entrainment	.....	0.005
Aeration factor	.....	0.595
Minimum (Weeping) vapor flow kg/h	.....	80442.218
Tray press loss, m	.....	0.131
Tray press loss, Pa	.....	1163.617
Downcomer clearance m	.....	0.076
Downcomer backup m	.....	0.395
Downcomer residence time, sec	.....	2.699
Actual tray efficiency (O'Connell)	.....	0.434
Actual tray efficiency (Chu)	.....	0.730

Equip. 1 Tray No. 11

Tray Loadings	Vapor	Liquid
	92362.158 kg/h	508602.749 kg/h
	31507.296 m3/h	559.876 m3/h
Density	2.931 kg/m3	908.420 kg/m3
Tower internal diameter, m	.....	3.353
Tray spacing, m	.....	0.610
No. of tray liquid passes	.....	1
Downcomer dimension,	Width m / Length m	Area m2
Side	0.597 / 2.565	1.064
Avg. weir length m	.....	2.565
Weir height, m	.....	0.051
Flow path length m	.....	2.159
Flow path width m	.....	3.104
Tray area, m2	.....	8.829
Tray active area m2	.....	6.701

SIEVE TRAY SIZING

% flood	.....	75.219
Fractional entrainment	.....	0.005
Aeration factor	.....	0.596
Minimum (Weeping) vapor flow kg/h	.....	80269.825
Tray press loss, m	.....	0.131
Tray press loss, Pa	.....	1162.680
Downcomer clearance m	.....	0.076
Downcomer backup m	.....	0.395
Downcomer residence time, sec	.....	2.699
Actual tray efficiency (O'Connell)	.....	0.434
Actual tray efficiency (Chu)	.....	0.730

Equip. 1 Tray No. 12

Tray Loadings	Vapor	Liquid
	91947.688 kg/h	508188.335 kg/h
	31529.437 m3/h	559.130 m3/h
Density	2.916 kg/m3	908.891 kg/m3
Tower internal diameter, m	.....	3.353
Tray spacing, m	.....	0.610
No. of tray liquid passes	.....	1
Downcomer dimension,	Width m / Length m	Area m2
Side	0.597 / 2.565	1.064
Avg. weir length m	.....	2.565
Weir height, m	.....	0.051
Flow path length m	.....	2.159
Flow path width m	.....	3.104
Tray area, m2	.....	8.829
Tray active area m2	.....	6.701
% flood	.....	75.049
Fractional entrainment	.....	0.005
Aeration factor	.....	0.596
Minimum (Weeping) vapor flow kg/h	.....	80058.713
Tray press loss, m	.....	0.130
Tray press loss, Pa	.....	1161.610
Downcomer clearance m	.....	0.076
Downcomer backup m	.....	0.394
Downcomer residence time, sec	.....	2.699
Actual tray efficiency (O'Connell)	.....	0.434
Actual tray efficiency (Chu)	.....	0.729

Equip. 1 Tray No. 13

Tray Loadings	Vapor	Liquid
	91469.233 kg/h	507709.852 kg/h
	31560.578 m3/h	558.269 m3/h
Density	2.898 kg/m3	909.436 kg/m3
Tower internal diameter, m	.....	3.353
Tray spacing, m	.....	0.610
No. of tray liquid passes	.....	1
Downcomer dimension,	Width m / Length m	Area m2
Side	0.597 / 2.565	1.064
Avg. weir length m	.....	2.565
Weir height, m	.....	0.051
Flow path length m	.....	2.159
Flow path width m	.....	3.104

SIEVE TRAY SIZING

Tray area, m2	.....	8.829
Tray active area m2	.....	6.701
% flood	.....	74.856
Fractional entrainment	.....	0.004
Aeration factor	.....	0.596
Minimum (Weeping) vapor flow kg/h	.....	79807.650
Tray press loss, m	.....	0.130
Tray press loss, Pa	.....	1160.420
Downcomer clearance m	.....	0.076
Downcomer backup m	.....	0.393
Downcomer residence time, sec	.....	2.698
Actual tray efficiency (O'Connell)	.....	0.433
Actual tray efficiency (Chu)	.....	0.727

Equip. 1 Tray No. 14

Tray Loadings	Vapor	Liquid
	90927.261 kg/h	507167.922 kg/h
	31600.891 m3/h	557.294 m3/h
Density	2.877 kg/m3	910.054 kg/m3
Tower internal diameter, m	.....	3.353
Tray spacing, m	.....	0.610
No. of tray liquid passes	.....	1
Downcomer dimension,	Width m / Length m	Area m2
Side	0.597 / 2.565	1.064
Avg. weir length m	.....	2.565
Weir height, m	.....	0.051
Flow path length m	.....	2.159
Flow path width m	.....	3.104
Tray area, m2	.....	8.829
Tray active area m2	.....	6.701
% flood	.....	74.641
Fractional entrainment	.....	0.004
Aeration factor	.....	0.596
Minimum (Weeping) vapor flow kg/h	.....	79516.592
Tray press loss, m	.....	0.130
Tray press loss, Pa	.....	1159.112
Downcomer clearance m	.....	0.076
Downcomer backup m	.....	0.393
Downcomer residence time, sec	.....	2.698
Actual tray efficiency (O'Connell)	.....	0.433
Actual tray efficiency (Chu)	.....	0.726

Equip. 1 Tray No. 15

Tray Loadings	Vapor	Liquid
	90324.160 kg/h	506564.815 kg/h
	31649.974 m3/h	556.211 m3/h
Density	2.854 kg/m3	910.742 kg/m3
Tower internal diameter, m	.....	3.353
Tray spacing, m	.....	0.610
No. of tray liquid passes	.....	1
Downcomer dimension,	Width m / Length m	Area m2
Side	0.597 / 2.565	1.064
Avg. weir length m	.....	2.565
Weir height, m	.....	0.051

SIEVE TRAY SIZING

Flow path length m	.....	2.159
Flow path width m	.....	3.104
Tray area, m2	.....	8.829
Tray active area m2	.....	6.701
% flood	.....	74.405
Fractional entrainment	.....	0.004
Aeration factor	.....	0.596
Minimum (Weeping) vapor flow kg/h	.....	79187.086
Tray press loss, m	.....	0.130
Tray press loss, Pa	.....	1157.686
Downcomer clearance m	.....	0.076
Downcomer backup m	.....	0.392
Downcomer residence time, sec	.....	2.698
Actual tray efficiency (O'Connell)	.....	0.432
Actual tray efficiency (Chu)	.....	0.725

Equip. 1 Tray No. 16

Tray Loadings	Vapor	Liquid
	89668.067 kg/h	505908.750 kg/h
	31708.093 m3/h	555.033 m3/h
Density	2.828 kg/m3	911.493 kg/m3
Tower internal diameter, m	.....	3.353
Tray spacing, m	.....	0.610
No. of tray liquid passes	.....	1
Downcomer dimension,	Width m / Length m	Area m2
Side	0.597 / 2.565	1.064
Avg. weir length m	.....	2.565
Weir height, m	.....	0.051
Flow path length m	.....	2.159
Flow path width m	.....	3.104
Tray area, m2	.....	8.829
Tray active area m2	.....	6.701
% flood	.....	74.150
Fractional entrainment	.....	0.004
Aeration factor	.....	0.596
Minimum (Weeping) vapor flow kg/h	.....	78822.412
Tray press loss, m	.....	0.129
Tray press loss, Pa	.....	1156.170
Downcomer clearance m	.....	0.076
Downcomer backup m	.....	0.391
Downcomer residence time, sec	.....	2.697
Actual tray efficiency (O'Connell)	.....	0.432
Actual tray efficiency (Chu)	.....	0.724

Equip. 1 Tray No. 17

Tray Loadings	Vapor	Liquid
	88966.636 kg/h	505207.326 kg/h
	31773.993 m3/h	553.776 m3/h
Density	2.800 kg/m3	912.296 kg/m3
Tower internal diameter, m	.....	3.353
Tray spacing, m	.....	0.610
No. of tray liquid passes	.....	1
Downcomer dimension,	Width m / Length m	Area m2
Side	0.597 / 2.565	1.064

SIEVE TRAY SIZING

Avg. weir length m	2.565
Weir height, m	0.051
Flow path length m	2.159
Flow path width m	3.104
Tray area, m2	8.829
Tray active area m2	6.701
% flood	73.880
Fractional entrainment	0.004
Aeration factor	0.597
Minimum (Weeping) vapor flow kg/h	78427.524
Tray press loss, m	0.129
Tray press loss, Pa	1154.573
Downcomer clearance m	0.076
Downcomer backup m	0.390
Downcomer residence time, sec	2.697
Actual tray efficiency (O'Connell)	0.431
Actual tray efficiency (Chu)	0.722

Equip. 1 Tray No. 18

Tray Loadings	Vapor	Liquid
	89332.558 kg/h	524774.224 kg/h
	32224.845 m3/h	574.786 m3/h
Density	2.772 kg/m3	912.991 kg/m3
Tower internal diameter, m		3.353
Tray spacing, m		0.610
No. of tray liquid passes		1

Downcomer dimension,	Width m	Length m	Area m2
Side	0.597	2.565	1.064

Avg. weir length m	2.565
Weir height, m	0.051
Flow path length m	2.159
Flow path width m	3.104
Tray area, m2	8.829
Tray active area m2	6.701
% flood	75.332
Fractional entrainment	0.004
Aeration factor	0.596
Minimum (Weeping) vapor flow kg/h	78629.968
Tray press loss, m	0.131
Tray press loss, Pa	1175.368
Downcomer clearance m	0.076
Downcomer backup m	0.403
Downcomer residence time, sec	2.685
Actual tray efficiency (O'Connell)	0.431
Actual tray efficiency (Chu)	0.727

Equip. 1 Tray No. 19

Tray Loadings	Vapor	Liquid
	88609.021 kg/h	524050.744 kg/h
	32301.669 m3/h	573.468 m3/h
Density	2.743 kg/m3	913.827 kg/m3
Tower internal diameter, m		3.353
Tray spacing, m		0.610
No. of tray liquid passes		1

SIEVE TRAY SIZING

Downcomer dimension,	Width m	Length m	Area m2
Side	0.597	2.565	1.064
Avg. weir length m	.....		2.565
Weir height, m	.....		0.051
Flow path length m	.....		2.159
Flow path width m	.....		3.104
Tray area, m2	.....		8.829
Tray active area m2	.....		6.701
% flood	.....		75.056
Fractional entrainment	.....		0.004
Aeration factor	.....		0.596
Minimum (Weeping) vapor flow kg/h	.....		78213.606
Tray press loss, m	.....		0.131
Tray press loss, Pa	.....		1173.766
Downcomer clearance m	.....		0.076
Downcomer backup m	.....		0.402
Downcomer residence time, sec	.....		2.685
Actual tray efficiency (O'Connell)	.....		0.430
Actual tray efficiency (Chu)	.....		0.725

Equip. 1 Tray No. 20

Tray Loadings	Vapor	Liquid	
	87878.263 kg/h	523319.950	kg/h
	32383.416 m3/h	572.133	m3/h
Density	2.714 kg/m3	914.683	kg/m3
Tower internal diameter, m	.....	3.353	
Tray spacing, m	.....	0.610	
No. of tray liquid passes	.....	1	
Downcomer dimension,	Width m	Length m	Area m2
Side	0.597	2.565	1.064
Avg. weir length m	.....		2.565
Weir height, m	.....		0.051
Flow path length m	.....		2.159
Flow path width m	.....		3.104
Tray area, m2	.....		8.829
Tray active area m2	.....		6.701
% flood	.....		74.778
Fractional entrainment	.....		0.004
Aeration factor	.....		0.596
Minimum (Weeping) vapor flow kg/h	.....		77788.101
Tray press loss, m	.....		0.131
Tray press loss, Pa	.....		1172.179
Downcomer clearance m	.....		0.076
Downcomer backup m	.....		0.401
Downcomer residence time, sec	.....		2.685
Actual tray efficiency (O'Connell)	.....		0.430
Actual tray efficiency (Chu)	.....		0.724

Equip. 1 Tray No. 21

Tray Loadings	Vapor	Liquid	
	87155.159 kg/h	522596.867	kg/h
	32467.069 m3/h	570.808	m3/h
Density	2.684 kg/m3	915.539	kg/m3
Tower internal diameter, m	.....	3.353	

SIEVE TRAY SIZING

Tray spacing, m	.....		0.610
No. of tray liquid passes	.....		1
Downcomer dimension,	Width m	Length m	Area m2
Side	0.597	2.565	1.064
Avg. weir length m	.....		2.565
Weir height, m	.....		0.051
Flow path length m	.....		2.159
Flow path width m	.....		3.104
Tray area, m2	.....		8.829
Tray active area m2	.....		6.701
% flood	.....		74.503
Fractional entrainment	.....		0.004
Aeration factor	.....		0.597
Minimum (Weeping) vapor flow kg/h	.....		77363.822
Tray press loss, m	.....		0.130
Tray press loss, Pa	.....		1170.626
Downcomer clearance m	.....		0.076
Downcomer backup m	.....		0.400
Downcomer residence time, sec	.....		2.684
Actual tray efficiency (O'Connell)	.....		0.430
Actual tray efficiency (Chu)	.....		0.722

Equip. 1 Tray No. 22

Tray Loadings	Vapor		Liquid
	86456.683 kg/h		521898.391 kg/h
	32550.371 m3/h		569.524 m3/h
Density	2.656 kg/m3		916.376 kg/m3
Tower internal diameter, m	.....		3.353
Tray spacing, m	.....		0.610
No. of tray liquid passes	.....		1
Downcomer dimension,	Width m	Length m	Area m2
Side	0.597	2.565	1.064
Avg. weir length m	.....		2.565
Weir height, m	.....		0.051
Flow path length m	.....		2.159
Flow path width m	.....		3.104
Tray area, m2	.....		8.829
Tray active area m2	.....		6.701
% flood	.....		74.237
Fractional entrainment	.....		0.004
Aeration factor	.....		0.597
Minimum (Weeping) vapor flow kg/h	.....		76951.138
Tray press loss, m	.....		0.130
Tray press loss, Pa	.....		1169.142
Downcomer clearance m	.....		0.076
Downcomer backup m	.....		0.399
Downcomer residence time, sec	.....		2.684
Actual tray efficiency (O'Connell)	.....		0.429
Actual tray efficiency (Chu)	.....		0.720

Equip. 1 Tray No. 23

Tray Loadings	Vapor	Liquid
	85796.579 kg/h	521238.244 kg/h
	32630.485 m3/h	568.307 m3/h

SIEVE TRAY SIZING

Density	2.629 kg/m3	917.177 kg/m3
Tower internal diameter, m	.....	3.353
Tray spacing, m	.....	0.610
No. of tray liquid passes	.....	1
Downcomer dimension,	Width m / Length m	Area m2
Side	0.597 / 2.565	1.064
Avg. weir length m	.....	2.565
Weir height, m	.....	0.051
Flow path length m	.....	2.159
Flow path width m	.....	3.104
Tray area, m2	.....	8.829
Tray active area m2	.....	6.701
% flood	.....	73.985
Fractional entrainment	.....	0.004
Aeration factor	.....	0.597
Minimum (Weeping) vapor flow kg/h	.....	76559.602
Tray press loss, m	.....	0.130
Tray press loss, Pa	.....	1167.746
Downcomer clearance m	.....	0.076
Downcomer backup m	.....	0.398
Downcomer residence time, sec	.....	2.684
Actual tray efficiency (O'Connell)	.....	0.429
Actual tray efficiency (Chu)	.....	0.719

Equip. 1 Tray No. 24

Tray Loadings	Vapor	Liquid
	85188.247 kg/h	520629.920 kg/h
	32705.734 m3/h	567.181 m3/h
Density	2.605 kg/m3	917.925 kg/m3
Tower internal diameter, m	.....	3.353
Tray spacing, m	.....	0.610
No. of tray liquid passes	.....	1
Downcomer dimension,	Width m / Length m	Area m2
Side	0.597 / 2.565	1.064
Avg. weir length m	.....	2.565
Weir height, m	.....	0.051
Flow path length m	.....	2.159
Flow path width m	.....	3.104
Tray area, m2	.....	8.829
Tray active area m2	.....	6.701
% flood	.....	73.752
Fractional entrainment	.....	0.004
Aeration factor	.....	0.597
Minimum (Weeping) vapor flow kg/h	.....	76197.288
Tray press loss, m	.....	0.130
Tray press loss, Pa	.....	1166.470
Downcomer clearance m	.....	0.076
Downcomer backup m	.....	0.397
Downcomer residence time, sec	.....	2.683
Actual tray efficiency (O'Connell)	.....	0.428
Actual tray efficiency (Chu)	.....	0.718

Equip. 1 Tray No. 25

Tray Loadings	Vapor	Liquid

SIEVE TRAY SIZING

	84638.125 kg/h	520079.883 kg/h
	32773.469 m3/h	566.160 m3/h
Density	2.583 kg/m3	918.610 kg/m3
Tower internal diameter, m	.....	3.353
Tray spacing, m	.....	0.610
No. of tray liquid passes	.....	1
Downcomer dimension,	Width m / Length m	Area m2
Side	0.597 / 2.565	1.064
Avg. weir length m	.....	2.565
Weir height, m	.....	0.051
Flow path length m	.....	2.159
Flow path width m	.....	3.104
Tray area, m2	.....	8.829
Tray active area m2	.....	6.701
% flood	.....	73.540
Fractional entrainment	.....	0.004
Aeration factor	.....	0.597
Minimum (Weeping) vapor flow kg/h	.....	75870.121
Tray press loss, m	.....	0.129
Tray press loss, Pa	.....	1165.312
Downcomer clearance m	.....	0.076
Downcomer backup m	.....	0.397
Downcomer residence time, sec	.....	2.683
Actual tray efficiency (O'Connell)	.....	0.428
Actual tray efficiency (Chu)	.....	0.716

Equip. 1 Tray No. 26

Tray Loadings	Vapor	Liquid
	84151.590 kg/h	519593.235 kg/h
	32832.561 m3/h	565.253 m3/h
Density	2.563 kg/m3	919.222 kg/m3
Tower internal diameter, m	.....	3.353
Tray spacing, m	.....	0.610
No. of tray liquid passes	.....	1
Downcomer dimension,	Width m / Length m	Area m2
Side	0.597 / 2.565	1.064
Avg. weir length m	.....	2.565
Weir height, m	.....	0.051
Flow path length m	.....	2.159
Flow path width m	.....	3.104
Tray area, m2	.....	8.829
Tray active area m2	.....	6.701
% flood	.....	73.351
Fractional entrainment	.....	0.004
Aeration factor	.....	0.597
Minimum (Weeping) vapor flow kg/h	.....	75581.792
Tray press loss, m	.....	0.129
Tray press loss, Pa	.....	1164.280
Downcomer clearance m	.....	0.076
Downcomer backup m	.....	0.396
Downcomer residence time, sec	.....	2.683
Actual tray efficiency (O'Connell)	.....	0.427
Actual tray efficiency (Chu)	.....	0.715

Equip. 1 Tray No. 27

SIEVE TRAY SIZING

Tray Loadings	Vapor	Liquid
	83730.182 kg/h	519171.791 kg/h
	32882.296 m3/h	564.465 m3/h
Density	2.546 kg/m3	919.759 kg/m3
Tower internal diameter, m	.....	3.353
Tray spacing, m	.....	0.610
No. of tray liquid passes	.....	1
Downcomer dimension,	Width m / Length m	Area m2
Side	0.597 / 2.565	1.064
Avg. weir length m	.....	2.565
Weir height, m	.....	0.051
Flow path length m	.....	2.159
Flow path width m	.....	3.104
Tray area, m2	.....	8.829
Tray active area m2	.....	6.701
% flood	.....	73.185
Fractional entrainment	.....	0.004
Aeration factor	.....	0.597
Minimum (Weeping) vapor flow kg/h	.....	75333.797
Tray press loss, m	.....	0.129
Tray press loss, Pa	.....	1163.377
Downcomer clearance m	.....	0.076
Downcomer backup m	.....	0.395
Downcomer residence time, sec	.....	2.683
Actual tray efficiency (O'Connell)	.....	0.427
Actual tray efficiency (Chu)	.....	0.714

Equip. 1 Tray No. 28

Tray Loadings	Vapor	Liquid
	83370.993 kg/h	518812.546 kg/h
	32921.935 m3/h	563.792 m3/h
Density	2.532 kg/m3	920.220 kg/m3
Tower internal diameter, m	.....	3.353
Tray spacing, m	.....	0.610
No. of tray liquid passes	.....	1
Downcomer dimension,	Width m / Length m	Area m2
Side	0.597 / 2.565	1.064
Avg. weir length m	.....	2.565
Weir height, m	.....	0.051
Flow path length m	.....	2.159
Flow path width m	.....	3.104
Tray area, m2	.....	8.829
Tray active area m2	.....	6.701
% flood	.....	73.041
Fractional entrainment	.....	0.004
Aeration factor	.....	0.598
Minimum (Weeping) vapor flow kg/h	.....	75125.563
Tray press loss, m	.....	0.129
Tray press loss, Pa	.....	1162.586
Downcomer clearance m	.....	0.076
Downcomer backup m	.....	0.395
Downcomer residence time, sec	.....	2.682
Actual tray efficiency (O'Connell)	.....	0.427
Actual tray efficiency (Chu)	.....	0.713

SIEVE TRAY SIZING

Equip. 1 Tray No. 29

Tray Loadings	Vapor	Liquid
	83070.007 kg/h	518511.644 kg/h
	32951.714 m3/h	563.228 m3/h
Density	2.521 kg/m3	920.607 kg/m3
Tower internal diameter, m	.....	3.200
Tray spacing, m	.....	0.610
No. of tray liquid passes	.....	1
Downcomer dimension,	Width m / Length m	Area m2
Side	0.578 / 2.462	0.989
Avg. weir length m	.....	2.462
Weir height, m	.....	0.051
Flow path length m	.....	2.045
Flow path width m	.....	2.967
Tray area, m2	.....	8.045
Tray active area m2	.....	6.066
% flood	.....	80.253
Fractional entrainment	.....	0.005
Aeration factor	.....	0.591
Minimum (Weeping) vapor flow kg/h	.....	68954.205
Tray press loss, m	.....	0.136
Tray press loss, Pa	.....	1229.465
Downcomer clearance m	.....	0.076
Downcomer backup m	.....	0.415
Downcomer residence time, sec	.....	2.621
Actual tray efficiency (O'Connell)	.....	0.427
Actual tray efficiency (Chu)	.....	0.712

Equip. 1 Tray No. 30

Tray Loadings	Vapor	Liquid
	82821.906 kg/h	518263.529 kg/h
	32972.429 m3/h	562.764 m3/h
Density	2.512 kg/m3	920.925 kg/m3
Tower internal diameter, m	.....	3.200
Tray spacing, m	.....	0.610
No. of tray liquid passes	.....	1
Downcomer dimension,	Width m / Length m	Area m2
Side	0.578 / 2.462	0.989
Avg. weir length m	.....	2.462
Weir height, m	.....	0.051
Flow path length m	.....	2.045
Flow path width m	.....	2.967
Tray area, m2	.....	8.045
Tray active area m2	.....	6.066
% flood	.....	80.139
Fractional entrainment	.....	0.005
Aeration factor	.....	0.591
Minimum (Weeping) vapor flow kg/h	.....	68828.517
Tray press loss, m	.....	0.136
Tray press loss, Pa	.....	1228.714
Downcomer clearance m	.....	0.076
Downcomer backup m	.....	0.414
Downcomer residence time, sec	.....	2.620

SIEVE TRAY SIZING

Actual tray efficiency (O'Connell)	0.427
Actual tray efficiency (Chu)	0.711

Equip. 1 Tray No. 31

Tray Loadings	Vapor	Liquid
	82619.299 kg/h	518060.887 kg/h
	32984.799 m3/h	562.389 m3/h
Density	2.505 kg/m3	921.180 kg/m3
Tower internal diameter, m		3.200
Tray spacing, m		0.610
No. of tray liquid passes		1
Downcomer dimension,	Width m / Length m	Area m2
Side	0.578 / 2.462	0.989
Avg. weir length m		2.462
Weir height, m		0.051
Flow path length m		2.045
Flow path width m		2.967
Tray area, m2		8.045
Tray active area m2		6.066
% flood		80.043
Fractional entrainment		0.005
Aeration factor		0.591
Minimum (Weeping) vapor flow kg/h		68730.456
Tray press loss, m		0.136
Tray press loss, Pa		1228.057
Downcomer clearance m		0.076
Downcomer backup m		0.414
Downcomer residence time, sec		2.620
Actual tray efficiency (O'Connell)		0.426
Actual tray efficiency (Chu)		0.711

Equip. 1 Tray No. 32

Tray Loadings	Vapor	Liquid
	82453.263 kg/h	517894.815 kg/h
	32989.418 m3/h	562.088 m3/h
Density	2.499 kg/m3	921.377 kg/m3
Tower internal diameter, m		3.200
Tray spacing, m		0.610
No. of tray liquid passes		1
Downcomer dimension,	Width m / Length m	Area m2
Side	0.578 / 2.462	0.989
Avg. weir length m		2.462
Weir height, m		0.051
Flow path length m		2.045
Flow path width m		2.967
Tray area, m2		8.045
Tray active area m2		6.066
% flood		79.961
Fractional entrainment		0.005
Aeration factor		0.591
Minimum (Weeping) vapor flow kg/h		68655.550
Tray press loss, m		0.136
Tray press loss, Pa		1227.462
Downcomer clearance m		0.076

SIEVE TRAY SIZING

Downcomer backup m	0.414
Downcomer residence time, sec	2.620
Actual tray efficiency (O'Connell)	0.426
Actual tray efficiency (Chu)	0.710

Equip. 1 Tray No. 33

Tray Loadings	Vapor	Liquid
	82316.193 kg/h	517757.660 kg/h
	32987.714 m3/h	561.850 m3/h
Density	2.495 kg/m3	921.523 kg/m3
Tower internal diameter, m		3.200
Tray spacing, m		0.610
No. of tray liquid passes		1
Downcomer dimension,	Width m / Length m	Area m2
Side	0.578 / 2.462	0.989
Avg. weir length m		2.462
Weir height, m		0.051
Flow path length m		2.045
Flow path width m		2.967
Tray area, m2		8.045
Tray active area m2		6.066
% flood		79.891
Fractional entrainment		0.005
Aeration factor		0.591
Minimum (Weeping) vapor flow kg/h		68599.078
Tray press loss, m		0.136
Tray press loss, Pa		1226.913
Downcomer clearance m		0.076
Downcomer backup m		0.413
Downcomer residence time, sec		2.620
Actual tray efficiency (O'Connell)		0.426
Actual tray efficiency (Chu)		0.710

Equip. 1 Tray No. 34

Tray Loadings	Vapor	Liquid
	82198.528 kg/h	517640.010 kg/h
	32980.594 m3/h	561.660 m3/h
Density	2.492 kg/m3	921.625 kg/m3
Tower internal diameter, m		3.200
Tray spacing, m		0.610
No. of tray liquid passes		1
Downcomer dimension,	Width m / Length m	Area m2
Side	0.578 / 2.462	0.989
Avg. weir length m		2.462
Weir height, m		0.051
Flow path length m		2.045
Flow path width m		2.967
Tray area, m2		8.045
Tray active area m2		6.066
% flood		79.830
Fractional entrainment		0.005
Aeration factor		0.591
Minimum (Weeping) vapor flow kg/h		68555.951
Tray press loss, m		0.136

SIEVE TRAY SIZING

Tray press loss, Pa	1226.379
Downcomer clearance m	0.076
Downcomer backup m	0.413
Downcomer residence time, sec	2.619
Actual tray efficiency (O'Connell)	0.426
Actual tray efficiency (Chu)	0.709

Equip. 1 Tray No. 35

Tray Loadings	Vapor	Liquid
	82090.998 kg/h	517532.565 kg/h
	32969.341 m3/h	561.506 m3/h
Density	2.490 kg/m3	921.686 kg/m3
Tower internal diameter, m		3.200
Tray spacing, m		0.610
No. of tray liquid passes		1
Downcomer dimension,	Width m / Length m	Area m2
Side	0.578 / 2.462	0.989
Avg. weir length m		2.462
Weir height, m		0.051
Flow path length m		2.045
Flow path width m		2.967
Tray area, m2		8.045
Tray active area m2		6.066
% flood		79.774
Fractional entrainment		0.005
Aeration factor		0.591
Minimum (Weeping) vapor flow kg/h		68520.819
Tray press loss, m		0.136
Tray press loss, Pa		1225.833
Downcomer clearance m		0.076
Downcomer backup m		0.413
Downcomer residence time, sec		2.619
Actual tray efficiency (O'Connell)		0.426
Actual tray efficiency (Chu)		0.709

Equip. 1 Tray No. 36

Tray Loadings	Vapor	Liquid
	81981.810 kg/h	517423.306 kg/h
	32954.563 m3/h	561.372 m3/h
Density	2.488 kg/m3	921.711 kg/m3
Tower internal diameter, m		3.200
Tray spacing, m		0.610
No. of tray liquid passes		1
Downcomer dimension,	Width m / Length m	Area m2
Side	0.578 / 2.462	0.989
Avg. weir length m		2.462
Weir height, m		0.051
Flow path length m		2.045
Flow path width m		2.967
Tray area, m2		8.045
Tray active area m2		6.066
% flood		79.719
Fractional entrainment		0.005
Aeration factor		0.592

SIEVE TRAY SIZING

Minimum (Weeping) vapor flow	kg/h	68487.848
Tray press loss, m	.....	0.136
Tray press loss, Pa	.....	1225.229
Downcomer clearance m	.....	0.076
Downcomer backup m	.....	0.413
Downcomer residence time, sec	.....	2.619
Actual tray efficiency (O'Connell)	.....	0.426
Actual tray efficiency (Chu)	.....	0.709

Equip. 1 Tray No. 37

Tray Loadings	Vapor	Liquid
	81859.858 kg/h	517301.346 kg/h
	32937.745 m3/h	561.245 m3/h
Density	2.485 kg/m3	921.703 kg/m3
Tower internal diameter, m	.....	3.200
Tray spacing, m	.....	0.610
No. of tray liquid passes	.....	1
Downcomer dimension,	Width m / Length m	Area m2
Side	0.578 / 2.462	0.989
Avg. weir length m	.....	2.462
Weir height, m	.....	0.051
Flow path length m	.....	2.045
Flow path width m	.....	2.967
Tray area, m2	.....	8.045
Tray active area m2	.....	6.066
% flood	.....	79.662
Fractional entrainment	.....	0.005
Aeration factor	.....	0.592
Minimum (Weeping) vapor flow	kg/h	68450.618
Tray press loss, m	.....	0.135
Tray press loss, Pa	.....	1224.534
Downcomer clearance m	.....	0.076
Downcomer backup m	.....	0.413
Downcomer residence time, sec	.....	2.619
Actual tray efficiency (O'Connell)	.....	0.426
Actual tray efficiency (Chu)	.....	0.708

Equip. 1 Tray No. 38

Tray Loadings	Vapor	Liquid
	81710.810 kg/h	517152.228 kg/h
	32919.852 m3/h	561.108 m3/h
Density	2.482 kg/m3	921.663 kg/m3
Tower internal diameter, m	.....	3.200
Tray spacing, m	.....	0.610
No. of tray liquid passes	.....	1
Downcomer dimension,	Width m / Length m	Area m2
Side	0.578 / 2.462	0.989
Avg. weir length m	.....	2.462
Weir height, m	.....	0.051
Flow path length m	.....	2.045
Flow path width m	.....	2.967
Tray area, m2	.....	8.045
Tray active area m2	.....	6.066
% flood	.....	79.596

SIEVE TRAY SIZING

Fractional entrainment	.....	0.005
Aeration factor	.....	0.592
Minimum (Weeping) vapor flow kg/h	.....	68401.694
Tray press loss, m	.....	0.135
Tray press loss, Pa	.....	1223.694
Downcomer clearance m	.....	0.076
Downcomer backup m	.....	0.413
Downcomer residence time, sec	.....	2.618
Actual tray efficiency (O'Connell)	.....	0.426
Actual tray efficiency (Chu)	.....	0.708

Equip. 1 Tray No. 39

Tray Loadings	Vapor	Liquid
	81514.100 kg/h	516955.482 kg/h
	32905.245 m3/h	560.938 m3/h
Density	2.477 kg/m3	921.590 kg/m3
Tower internal diameter, m	.....	3.200
Tray spacing, m	.....	0.610
No. of tray liquid passes	.....	1

Downcomer dimension,	Width m	Length m	Area m2
Side	0.578	2.462	0.989

Avg. weir length m	.....	2.462
Weir height, m	.....	0.051
Flow path length m	.....	2.045
Flow path width m	.....	2.967
Tray area, m2	.....	8.045
Tray active area m2	.....	6.066
% flood	.....	79.519
Fractional entrainment	.....	0.005
Aeration factor	.....	0.592
Minimum (Weeping) vapor flow kg/h	.....	68327.326
Tray press loss, m	.....	0.135
Tray press loss, Pa	.....	1222.658
Downcomer clearance m	.....	0.076
Downcomer backup m	.....	0.412
Downcomer residence time, sec	.....	2.618
Actual tray efficiency (O'Connell)	.....	0.426
Actual tray efficiency (Chu)	.....	0.708

DISTILLATION PROFILE
Unit type : SCDS Unit name: AS-602 Eqp # 2

Stg	Temp C	Pres Pa	* Net Flows * Liquid kmol/h	Vapor kmol/h	Feeds kmol/h	Product kmol/h	Duties kW
1	79.21	05000.00	2100.85			525.21	-2.893E+004
2	80.91	12000.00	2110.90	2626.06			
						10.55	side pr
3	81.11	12926.47	2111.15	2646.66			
4	81.31	13852.94	2111.53	2646.90			
5	81.51	14779.42	2111.97	2647.29			
6	81.71	15705.89	2112.45	2647.72			
7	82.01	16632.35	2112.95	2648.20			
8	82.21	17558.82	2113.47	2648.71			
9	82.41	18485.30	2113.98	2649.22			
10	82.61	19411.77	2114.51	2649.74			
11	82.81	20338.23	2115.03	2650.27			
12	83.01	21264.70	2115.56	2650.79			
13	83.21	22191.19	2116.08	2651.31			
14	83.41	23117.66	2116.59	2651.83			
15	83.61	24044.12	2117.11	2652.35			
16	83.81	24970.59	2117.62	2652.87			
17	84.01	25897.07	2118.13	2653.38			
18	84.21	26823.54	2118.63	2653.89			
19	84.41	27750.01	2119.12	2654.39			
20	84.61	28676.47	2119.62	2654.88			
21	84.81	29602.94	2120.09	2655.38			
22	85.01	30529.42	2120.57	2655.85			
23	85.11	31455.89	2121.03	2656.33			
24	85.31	32382.36	2121.49	2656.79			
25	85.51	33308.83	2121.92	2657.24			
26	85.71	34235.30	2122.36	2657.68			
27	85.91	35161.77	2122.78	2658.11			
28	86.11	36088.23	2123.19	2658.54			
29	86.31	37014.70	2123.57	2658.94			
30	86.51	37941.19	2123.95	2659.33			
31	86.61	38867.66	2124.29	2659.71			
32	86.81	39794.12	2124.63	2660.05			
33	87.01	40720.59	2124.94	2660.39			
34	87.21	41647.08	2125.23	2660.70			
35	87.41	42573.55	2125.49	2660.98			
36	87.61	43500.00	2125.71	2661.24			
37	87.71	44426.47	2125.90	2661.47			
38	87.91	45352.94	2126.05	2661.65			
39	88.11	46279.42	2126.17	2661.81			
40	88.31	47205.89	2126.23	2661.92			
41	88.51	48132.36	2126.25	2661.99			
42	88.71	49058.83	2126.21	2662.00			
43	88.91	49985.31	2126.11	2661.97			
44	89.01	50911.78	2125.93	2661.87			
45	89.21	51838.23	2125.68	2661.68			
46	89.41	52764.70	2125.34	2661.44			
47	89.61	53691.19	2124.91	2661.10			
48	89.81	54617.66	2124.36	2660.66			
49	90.01	55544.12	2123.65	2660.12			

$6.91 \times 10^6 \frac{cal}{sec}$

DISTILLATION PROFILE

50	90.2156470.59	2122.85	2659.41			
51	90.4157397.06	2121.85	2658.60			
52	90.6158323.55	2120.64	2657.61			
53	90.8159250.02	2119.21	2656.40			
54	91.1160176.47	2117.51	2654.96			
55	91.3161102.94	2115.49	2653.27			
56	91.6162029.42	2113.06	2651.24			
57	91.8162955.89	2110.11	2648.81			
58	92.1163882.36	2106.38	2645.87			
59	92.5164808.83	2101.96	2642.13			
60	92.9165735.31	2096.51	2637.72			
61	93.3166661.78	2089.58	2632.27			
62	93.9167588.25	3037.20	2625.34	1039.41		
63	94.6168514.70	3022.58	2533.55			
64	95.7169441.19	2999.07	2518.93			
65	97.9170367.66	2964.60	2495.41			
66	103.2171294.12	2950.97	2460.94			
67	109.5172220.59	2971.47	2447.32			
68	112.5173147.06	2988.80	2467.82			
69	113.5174073.55	3000.66	2485.15			
70	114.8175000.02		2497.01		503.65	2.809E+004

Reflux ratio 4.000

6.907×10^6 cal/sec

TRAY PROPERTIES

Unit type : SCDS Unit name: AS-602 Eqp # 2

LIQUID

Stg	kg/h	Average mol wt	Actual vol rate m3/h	Actual density kg/m3	viscosity N-s/m2	Thermal conduct. W/m-K	Surface tension J/m2
1	89377	42.54	120.50	741.74	0.0004	0.162	0.019
2	89639	42.46	121.10	740.23	0.0004	0.162	0.018
3	89492	42.39	120.90	740.23	0.0004	0.162	0.018
4	89356	42.32	120.71	740.23	0.0004	0.162	0.018
5	89228	42.25	120.54	740.22	0.0004	0.162	0.018
6	89106	42.18	120.38	740.20	0.0004	0.163	0.018
7	88988	42.12	120.23	740.18	0.0004	0.163	0.018
8	88875	42.05	120.08	740.16	0.0004	0.163	0.018
9	88765	41.99	119.93	740.13	0.0004	0.163	0.018
10	88657	41.93	119.79	740.11	0.0004	0.163	0.018
11	88552	41.87	119.65	740.08	0.0004	0.163	0.018
12	88448	41.81	119.52	740.05	0.0004	0.163	0.018
13	88346	41.75	119.38	740.02	0.0004	0.163	0.018
14	88244	41.69	119.25	739.99	0.0004	0.164	0.018
15	88144	41.63	119.12	739.96	0.0004	0.164	0.018
16	88043	41.58	118.99	739.93	0.0004	0.164	0.018
17	87943	41.52	118.86	739.91	0.0004	0.164	0.018
18	87842	41.46	118.72	739.89	0.0004	0.164	0.018
19	87741	41.40	118.59	739.86	0.0004	0.164	0.018
20	87639	41.35	118.46	739.85	0.0004	0.164	0.018
21	87536	41.29	118.32	739.83	0.0004	0.164	0.018
22	87432	41.23	118.18	739.82	0.0004	0.164	0.018
23	87325	41.17	118.04	739.82	0.0004	0.165	0.018
24	87217	41.11	117.89	739.82	0.0004	0.165	0.018
25	87106	41.05	117.74	739.83	0.0004	0.165	0.018
26	86992	40.99	117.58	739.84	0.0004	0.165	0.018
27	86876	40.93	117.42	739.87	0.0004	0.165	0.019
28	86756	40.86	117.25	739.90	0.0004	0.165	0.019
29	86632	40.80	117.08	739.94	0.0004	0.165	0.019
30	86505	40.73	116.90	740.00	0.0004	0.166	0.019
31	86372	40.66	116.71	740.06	0.0004	0.166	0.019
32	86235	40.59	116.51	740.15	0.0004	0.166	0.019
33	86092	40.52	116.30	740.25	0.0004	0.166	0.019
34	85944	40.44	116.08	740.37	0.0004	0.166	0.019
35	85789	40.36	115.85	740.51	0.0004	0.167	0.019
36	85627	40.28	115.61	740.68	0.0004	0.167	0.019
37	85458	40.20	115.35	740.87	0.0004	0.167	0.019
38	85281	40.11	115.08	741.09	0.0004	0.167	0.019
39	85096	40.02	114.79	741.35	0.0004	0.168	0.019
40	84901	39.93	114.48	741.65	0.0004	0.168	0.019
41	84697	39.83	114.15	741.99	0.0004	0.168	0.019
42	84481	39.73	113.80	742.38	0.0004	0.169	0.019
43	84254	39.63	113.42	742.83	0.0004	0.169	0.019
44	84013	39.52	113.02	743.34	0.0004	0.170	0.019
45	83759	39.40	112.59	743.93	0.0004	0.170	0.019
46	83489	39.28	112.13	744.59	0.0004	0.170	0.019
47	83201	39.16	111.63	745.36	0.0004	0.171	0.019
48	82894	39.02	111.08	746.23	0.0004	0.172	0.019
49	82563	38.88	110.49	747.23	0.0004	0.172	0.019

TRAY PROPERTIES

50	82208	38.73	109.85	748.38	0.0004	0.173	0.019
51	81822	38.56	109.14	749.70	0.0004	0.174	0.019
52	81400	38.38	108.36	751.22	0.0004	0.175	0.020
53	80937	38.19	107.49	752.98	0.0004	0.176	0.020
54	80423	37.98	106.51	755.04	0.0004	0.177	0.020
55	79845	37.74	105.41	757.46	0.0003	0.179	0.020
56	79188	37.48	104.15	760.32	0.0003	0.180	0.020
57	78425	37.17	102.68	763.77	0.0003	0.183	0.021
58	77517	36.80	100.94	767.95	0.0003	0.185	0.021
59	76419	36.36	98.84	773.14	0.0003	0.188	0.021
60	75037	35.79	96.24	779.70	0.0003	0.193	0.022
61	73210	35.04	92.88	788.24	0.0003	0.199	0.023
62	100865	33.21	126.55	797.06	0.0003	0.212	0.024
63	97898	32.39	120.49	812.48	0.0003	0.224	0.025
64	92891	30.97	110.70	839.17	0.0003	0.246	0.028
65	85081	28.70	96.04	885.88	0.0003	0.295	0.034
66	77580	26.29	82.33	942.32	0.0003	0.372	0.042
67	73640	24.78	75.93	969.89	0.0003	0.432	0.047
68	69966	23.41	71.87	973.46	0.0003	0.476	0.049
69	64765	21.58	66.97	967.10	0.0003	0.532	0.051
70	9661	19.18	10.13	953.82	0.0002	0.625	0.054

VAPOR

Stg	kg/h	Average mol wt	Actual vol rate m3/h	Actual density kg/m3	viscosity N-s/m2	Thermal conduct. W/m-K	Compr. factor
1	0	0.00	0	0.00	0.0000	0.000	0.000
2	111721	42.54	67556	1.65	0.0000	0.021	0.979
3	112432	42.48	67562	1.66	0.0000	0.021	0.979
4	112284	42.42	67052	1.67	0.0000	0.021	0.979
5	112149	42.36	66553	1.69	0.0000	0.021	0.979
6	112020	42.31	66063	1.70	0.0000	0.021	0.979
7	111898	42.25	65582	1.71	0.0000	0.021	0.978
8	111781	42.20	65108	1.72	0.0000	0.021	0.978
9	111668	42.15	64642	1.73	0.0000	0.021	0.978
10	111558	42.10	64183	1.74	0.0000	0.021	0.978
11	111450	42.05	63731	1.75	0.0000	0.021	0.978
12	111345	42.00	63286	1.76	0.0000	0.021	0.978
13	111241	41.96	62847	1.77	0.0000	0.021	0.978
14	111138	41.91	62415	1.78	0.0000	0.021	0.978
15	111037	41.86	61989	1.79	0.0000	0.021	0.978
16	110936	41.82	61569	1.80	0.0000	0.021	0.977
17	110836	41.77	61154	1.81	0.0000	0.021	0.977
18	110736	41.73	60746	1.82	0.0000	0.021	0.977
19	110635	41.68	60343	1.83	0.0000	0.021	0.977
20	110534	41.63	59946	1.84	0.0000	0.021	0.977
21	110432	41.59	59554	1.85	0.0000	0.021	0.977
22	110329	41.54	59168	1.86	0.0000	0.021	0.977
23	110224	41.50	58786	1.87	0.0000	0.021	0.977
24	110118	41.45	58410	1.89	0.0000	0.021	0.977
25	110010	41.40	58039	1.90	0.0000	0.021	0.977
26	109899	41.35	57672	1.91	0.0000	0.022	0.976
27	109785	41.30	57310	1.92	0.0000	0.022	0.976
28	109669	41.25	56953	1.93	0.0000	0.022	0.976
29	109549	41.20	56600	1.94	0.0000	0.022	0.976
30	109425	41.15	56252	1.95	0.0000	0.022	0.976

TRAY PROPERTIES

31	109297	41.09	55908	1.95	0.0000	0.022	0.976
32	109165	41.04	55568	1.96	0.0000	0.022	0.976
33	109028	40.98	55232	1.97	0.0000	0.022	0.976
34	108885	40.92	54900	1.98	0.0000	0.022	0.976
35	108736	40.86	54572	1.99	0.0000	0.022	0.976
36	108582	40.80	54248	2.00	0.0000	0.022	0.975
37	108420	40.74	53927	2.01	0.0000	0.022	0.975
38	108251	40.67	53610	2.02	0.0000	0.022	0.975
39	108074	40.60	53297	2.03	0.0000	0.022	0.975
40	107889	40.53	52986	2.04	0.0000	0.022	0.975
41	107694	40.46	52679	2.04	0.0000	0.022	0.975
42	107489	40.38	52375	2.05	0.0000	0.022	0.975
43	107274	40.30	52074	2.06	0.0000	0.022	0.975
44	107047	40.21	51775	2.07	0.0000	0.022	0.975
45	106806	40.13	51479	2.07	0.0000	0.022	0.975
46	106552	40.04	51186	2.08	0.0000	0.022	0.975
47	106282	39.94	50896	2.09	0.0000	0.022	0.975
48	105994	39.84	50607	2.09	0.0000	0.022	0.975
49	105687	39.73	50321	2.10	0.0000	0.022	0.975
50	105355	39.62	50035	2.11	0.0000	0.022	0.975
51	105000	39.49	49753	2.11	0.0000	0.022	0.975
52	104615	39.36	49471	2.11	0.0000	0.022	0.975
53	104193	39.22	49190	2.12	0.0000	0.022	0.975
54	103729	39.07	48910	2.12	0.0000	0.022	0.975
55	103215	38.90	48630	2.12	0.0000	0.022	0.975
56	102638	38.71	48351	2.12	0.0000	0.022	0.975
57	101980	38.50	48071	2.12	0.0000	0.022	0.975
58	101218	38.26	47789	2.12	0.0000	0.022	0.975
59	100310	37.97	47503	2.11	0.0000	0.022	0.975
60	99212	37.61	47217	2.10	0.0000	0.022	0.975
61	97829	37.17	46928	2.08	0.0000	0.022	0.975
62	96003	36.57	46636	2.06	0.0000	0.022	0.976
63	91205	36.00	44858	2.03	0.0000	0.022	0.976
64	88237	35.03	44520	1.98	0.0000	0.022	0.977
65	83231	33.35	44188	1.88	0.0000	0.022	0.978
66	75421	30.65	44062	1.71	0.0000	0.022	0.980
67	67919	27.75	44421	1.53	0.0000	0.023	0.983
68	63980	25.93	44944	1.42	0.0000	0.023	0.984
69	60306	24.27	45175	1.33	0.0000	0.024	0.984
70	55104	22.07	45345	1.22	0.0000	0.025	0.985

TRAY COMPOSITIONS

Unit type : SCDS Unit name: AS-602 Eqp # 2

Stage # 1 79.22 C 105000.00 Pa

	V Mass frac	L Mass frac	K
Water	0.00000	0.05318	0.00000
Ethanol	0.00000	0.94537	0.00000
Furfural	0.00000	0.00000	0.00000
Glycerol	0.00000	0.00000	0.00000
Acetaldehyde	0.00000	0.00145	0.00000
Total kg/h	0.0000	89376.5281	

Stage # 2 80.88 C 112000.00 Pa

	V Mass frac	L Mass frac	K
Water	0.05318	0.05448	0.97798
Ethanol	0.94537	0.94463	1.00264
Furfural	0.00000	0.00000	0.66444
Glycerol	0.00000	0.00000	0.00000
Acetaldehyde	0.00145	0.00090	1.61404
Total kg/h	111720.6654	89639.1935	

Stage # 3 81.11 C 112926.47 Pa

	V Mass frac	L Mass frac	K
Water	0.05421	0.05571	0.97513
Ethanol	0.94478	0.94368	1.00330
Furfural	0.00000	0.00000	0.65052
Glycerol	0.00000	0.00000	0.00000
Acetaldehyde	0.00101	0.00060	1.67535
Total kg/h	112431.9904	89491.5350	

Stage # 4 81.32 C 113852.94 Pa

	V Mass frac	L Mass frac	K
Water	0.05520	0.05691	0.97237
Ethanol	0.94402	0.94265	1.00390
Furfural	0.00000	0.00000	0.64204
Glycerol	0.00000	0.00000	0.00000
Acetaldehyde	0.00078	0.00045	1.74248
Total kg/h	112284.3390	89355.8116	

Stage # 5 81.54 C 114779.42 Pa

	V Mass frac	L Mass frac	K
Water	0.05615	0.05806	0.96973
Ethanol	0.94320	0.94158	1.00445
Furfural	0.00000	0.00000	0.63672
Glycerol	0.00000	0.00000	0.00000
Acetaldehyde	0.00065	0.00036	1.80290
Total kg/h	112148.6156	89227.5088	

Stage # 6 81.75 C 115705.89 Pa

	V Mass frac	L Mass frac	K
Water	0.05707	0.05918	0.96720
Ethanol	0.94235	0.94050	1.00498
Furfural	0.00000	0.00000	0.63340
Glycerol	0.00000	0.00000	0.00000
Acetaldehyde	0.00058	0.00032	1.84837
Total kg/h	112020.2986	89105.5350	

TRAY COMPOSITIONS

Stage # 7 81.96 C 116632.35 Pa

	V Mass frac	L Mass frac	K
Water	0.05796	0.06027	0.96477
Ethanol	0.94150	0.93944	1.00549
Furfural	0.00000	0.00000	0.63140
Glycerol	0.00000	0.00000	0.00000
Acetaldehyde	0.00055	0.00029	1.87794
Total kg/h	111898.3248	88988.4302	

Stage # 8 82.17 C 117558.82 Pa

	V Mass frac	L Mass frac	K
Water	0.05882	0.06134	0.96244
Ethanol	0.94065	0.93838	1.00600
Furfural	0.00000	0.00000	0.63031
Glycerol	0.00000	0.00000	0.00000
Acetaldehyde	0.00053	0.00028	1.89503
Total kg/h	111781.2200	88875.0108	

Stage # 9 82.37 C 118485.30 Pa

	V Mass frac	L Mass frac	K
Water	0.05967	0.06239	0.96020
Ethanol	0.93981	0.93734	1.00650
Furfural	0.00000	0.00000	0.62985
Glycerol	0.00000	0.00000	0.00000
Acetaldehyde	0.00052	0.00027	1.90383
Total kg/h	111667.7935	88764.7241	

Stage # 10 82.58 C 119411.77 Pa

	V Mass frac	L Mass frac	K
Water	0.06050	0.06342	0.95803
Ethanol	0.93898	0.93631	1.00700
Furfural	0.00000	0.00001	0.62984
Glycerol	0.00000	0.00000	0.00000
Acetaldehyde	0.00051	0.00027	1.90766
Total kg/h	111557.5210	88657.1376	

Stage # 11 82.78 C 120338.23 Pa

	V Mass frac	L Mass frac	K
Water	0.06132	0.06443	0.95593
Ethanol	0.93816	0.93529	1.00749
Furfural	0.00000	0.00001	0.63018
Glycerol	0.00000	0.00000	0.00000
Acetaldehyde	0.00051	0.00027	1.90864
Total kg/h	111449.9204	88551.7625	

Stage # 12 82.98 C 121264.70 Pa

	V Mass frac	L Mass frac	K
Water	0.06213	0.06544	0.95389
Ethanol	0.93736	0.93429	1.00799
Furfural	0.00001	0.00001	0.63075
Glycerol	0.00000	0.00000	0.00000
Acetaldehyde	0.00051	0.00027	1.90806
Total kg/h	111344.5523	88447.9323	

Stage # 13 83.19 C 122191.19 Pa

TRAY COMPOSITIONS

	V Mass frac	L Mass frac	K
Water	0.06292	0.06643	0.95191
Ethanol	0.93656	0.93329	1.00848
Furfural	0.00001	0.00001	0.63151
Glycerol	0.00000	0.00000	0.00000
Acetaldehyde	0.00051	0.00027	1.90664
Total kg/h	111240.7151	88345.5055	

Stage # 14 83.39 C 123117.66 Pa

	V Mass frac	L Mass frac	K
Water	0.06371	0.06742	0.94997
Ethanol	0.93577	0.93230	1.00898
Furfural	0.00001	0.00001	0.63241
Glycerol	0.00000	0.00000	0.00000
Acetaldehyde	0.00051	0.00027	1.90478
Total kg/h	111138.3024	88244.0993	

Stage # 15 83.59 C 124044.12 Pa

	V Mass frac	L Mass frac	K
Water	0.06450	0.06841	0.94806
Ethanol	0.93498	0.93131	1.00948
Furfural	0.00001	0.00002	0.63341
Glycerol	0.00000	0.00000	0.00000
Acetaldehyde	0.00051	0.00027	1.90271
Total kg/h	111036.8891	88143.5081	

Stage # 16 83.78 C 124970.59 Pa

	V Mass frac	L Mass frac	K
Water	0.06528	0.06939	0.94620
Ethanol	0.93420	0.93032	1.00999
Furfural	0.00002	0.00002	0.63450
Glycerol	0.00000	0.00000	0.00000
Acetaldehyde	0.00051	0.00027	1.90055
Total kg/h	110936.2979	88042.9736	

Stage # 17 83.98 C 125897.07 Pa

	V Mass frac	L Mass frac	K
Water	0.06606	0.07037	0.94435
Ethanol	0.93341	0.92933	1.01051
Furfural	0.00002	0.00003	0.63565
Glycerol	0.00000	0.00000	0.00000
Acetaldehyde	0.00051	0.00027	1.89835
Total kg/h	110835.7634	87942.8431	

Stage # 18 84.18 C 126823.54 Pa

	V Mass frac	L Mass frac	K
Water	0.06683	0.07136	0.94253
Ethanol	0.93263	0.92833	1.01103
Furfural	0.00002	0.00004	0.63686
Glycerol	0.00000	0.00000	0.00000
Acetaldehyde	0.00051	0.00027	1.89616
Total kg/h	110735.6329	87842.2519	

Stage # 19 84.37 C 127750.01 Pa

	V Mass frac	L Mass frac	K
Water	0.06761	0.07235	0.94073

TRAY COMPOSITIONS

Ethanol	0.93184	0.92733	1.01156
Furfural	0.00003	0.00005	0.63811
Glycerol	0.00000	0.00000	0.00000
Acetaldehyde	0.00051	0.00027	1.89398
Total kg/h	110635.0558	87740.9378	

Stage # 20	84.57 C	128676.47 Pa	
	V Mass frac	L Mass frac	K
Water	0.06840	0.07335	0.93894
Ethanol	0.93105	0.92631	1.01210
Furfural	0.00004	0.00006	0.63940
Glycerol	0.00000	0.00000	0.00000
Acetaldehyde	0.00052	0.00027	1.89183
Total kg/h	110533.7205	87639.4181	

Stage # 21	84.76 C	129602.94 Pa	
	V Mass frac	L Mass frac	K
Water	0.06919	0.07436	0.93716
Ethanol	0.93025	0.92529	1.01265
Furfural	0.00005	0.00007	0.64072
Glycerol	0.00000	0.00000	0.00000
Acetaldehyde	0.00052	0.00028	1.88972
Total kg/h	110432.2150	87536.0770	

Stage # 22	84.95 C	130529.42 Pa	
	V Mass frac	L Mass frac	K
Water	0.06999	0.07539	0.93539
Ethanol	0.92944	0.92425	1.01322
Furfural	0.00006	0.00009	0.64208
Glycerol	0.00000	0.00000	0.00000
Acetaldehyde	0.00052	0.00028	1.88764
Total kg/h	110328.8597	87431.6303	

Stage # 23	85.14 C	131455.89 Pa	
	V Mass frac	L Mass frac	K
Water	0.07079	0.07642	0.93361
Ethanol	0.92861	0.92318	1.01380
Furfural	0.00007	0.00012	0.64346
Glycerol	0.00000	0.00000	0.00000
Acetaldehyde	0.00052	0.00028	1.88560
Total kg/h	110224.4272	87325.0503	

Stage # 24	85.33 C	132382.36 Pa	
	V Mass frac	L Mass frac	K
Water	0.07161	0.07748	0.93183
Ethanol	0.92778	0.92210	1.01440
Furfural	0.00009	0.00014	0.64487
Glycerol	0.00000	0.00000	0.00000
Acetaldehyde	0.00052	0.00028	1.88359
Total kg/h	110117.8471	87216.7763	

Stage # 25	85.52 C	133308.83 Pa	
	V Mass frac	L Mass frac	K
Water	0.07245	0.07856	0.93004
Ethanol	0.92692	0.92099	1.01501
Furfural	0.00011	0.00018	0.64632

TRAY COMPOSITIONS

Glycerol	0.00000	0.00000	0.00000
Acetaldehyde	0.00052	0.00028	1.88161
Total kg/h	110009.5732	87105.7809	

Stage # 26 85.71 C 134235.30 Pa

	V Mass frac	L Mass frac	K
Water	0.07329	0.07966	0.92824
Ethanol	0.92604	0.91984	1.01565
Furfural	0.00014	0.00022	0.64779
Glycerol	0.00000	0.00000	0.00000
Acetaldehyde	0.00052	0.00028	1.87966
Total kg/h	109898.5636	86992.3332	

Stage # 27 85.90 C 135161.77 Pa

	V Mass frac	L Mass frac	K
Water	0.07416	0.08079	0.92643
Ethanol	0.92514	0.91866	1.01631
Furfural	0.00017	0.00027	0.64928
Glycerol	0.00000	0.00000	0.00000
Acetaldehyde	0.00052	0.00028	1.87773
Total kg/h	109785.1159	86875.8662	

Stage # 28 86.08 C 136088.23 Pa

	V Mass frac	L Mass frac	K
Water	0.07505	0.08194	0.92459
Ethanol	0.92421	0.91744	1.01700
Furfural	0.00021	0.00033	0.65081
Glycerol	0.00000	0.00000	0.00000
Acetaldehyde	0.00052	0.00028	1.87583
Total kg/h	109668.6419	86756.0966	

Stage # 29 86.27 C 137014.70 Pa

	V Mass frac	L Mass frac	K
Water	0.07596	0.08314	0.92273
Ethanol	0.92325	0.91617	1.01772
Furfural	0.00026	0.00041	0.65237
Glycerol	0.00000	0.00000	0.00000
Acetaldehyde	0.00052	0.00028	1.87394
Total kg/h	109548.8793	86632.2446	

Stage # 30 86.46 C 137941.19 Pa

	V Mass frac	L Mass frac	K
Water	0.07690	0.08437	0.92085
Ethanol	0.92226	0.91485	1.01847
Furfural	0.00032	0.00050	0.65396
Glycerol	0.00000	0.00000	0.00000
Acetaldehyde	0.00053	0.00028	1.87207
Total kg/h	109425.0202	86504.5513	

Stage # 31 86.64 C 138867.66 Pa

	V Mass frac	L Mass frac	K
Water	0.07786	0.08564	0.91893
Ethanol	0.92122	0.91347	1.01926
Furfural	0.00039	0.00061	0.65558
Glycerol	0.00000	0.00000	0.00000
Acetaldehyde	0.00053	0.00028	1.87021

TRAY COMPOSITIONS

Total kg/h	109297.3411	86371.8259

Stage # 32	86.83 C	139794.12 Pa	
	V Mass frac	L Mass frac	K
Water	0.07886	0.08695	0.91698
Ethanol	0.92013	0.91202	1.02009
Furfural	0.00048	0.00074	0.65722
Glycerol	0.00000	0.00000	0.00000
Acetaldehyde	0.00053	0.00029	1.86834
Total kg/h	109164.6228	86234.7559	

Stage # 33	87.01 C	140720.59 Pa	
	V Mass frac	L Mass frac	K
Water	0.07989	0.08832	0.91499
Ethanol	0.91900	0.91050	1.02096
Furfural	0.00058	0.00090	0.65890
Glycerol	0.00000	0.00000	0.00000
Acetaldehyde	0.00053	0.00029	1.86646
Total kg/h	109027.5457	86092.0374	

Stage # 34	87.19 C	141647.08 Pa	
	V Mass frac	L Mass frac	K
Water	0.08096	0.08974	0.91297
Ethanol	0.91780	0.90888	1.02189
Furfural	0.00071	0.00109	0.66061
Glycerol	0.00000	0.00000	0.00000
Acetaldehyde	0.00053	0.00029	1.86457
Total kg/h	108884.8342	85943.6418	

Stage # 35	87.38 C	142573.55 Pa	
	V Mass frac	L Mass frac	K
Water	0.08208	0.09123	0.91089
Ethanol	0.91653	0.90717	1.02286
Furfural	0.00086	0.00131	0.66234
Glycerol	0.00000	0.00000	0.00000
Acetaldehyde	0.00053	0.00029	1.86265
Total kg/h	108736.4316	85788.9172	

Stage # 36	87.56 C	143500.00 Pa	
	V Mass frac	L Mass frac	K
Water	0.08324	0.09278	0.90876
Ethanol	0.91519	0.90535	1.02390
Furfural	0.00104	0.00158	0.66409
Glycerol	0.00000	0.00000	0.00000
Acetaldehyde	0.00053	0.00029	1.86070
Total kg/h	108581.7211	85627.2398	

Stage # 37	87.75 C	144426.47 Pa	
	V Mass frac	L Mass frac	K
Water	0.08445	0.09440	0.90658
Ethanol	0.91376	0.90341	1.02501
Furfural	0.00125	0.00190	0.66587
Glycerol	0.00000	0.00000	0.00000
Acetaldehyde	0.00053	0.00029	1.85869
Total kg/h	108420.0509	85458.1349	

TRAY COMPOSITIONS

Stage # 38	87.93 C	145352.94 Pa	
	V Mass frac	L Mass frac	K
Water	0.08572	0.09611	0.90434
Ethanol	0.91224	0.90132	1.02620
Furfural	0.00150	0.00228	0.66766
Glycerol	0.00000	0.00000	0.00000
Acetaldehyde	0.00053	0.00029	1.85662
Total kg/h	108250.9318	85281.3473	

Stage # 39	88.11 C	146279.42 Pa	
	V Mass frac	L Mass frac	K
Water	0.08706	0.09790	0.90204
Ethanol	0.91061	0.89908	1.02747
Furfural	0.00180	0.00273	0.66946
Glycerol	0.00000	0.00000	0.00000
Acetaldehyde	0.00054	0.00029	1.85447
Total kg/h	108074.1442	85095.9627	

Stage # 40	88.30 C	147205.89 Pa	
	V Mass frac	L Mass frac	K
Water	0.08846	0.09980	0.89966
Ethanol	0.90886	0.89666	1.02884
Furfural	0.00215	0.00325	0.67126
Glycerol	0.00000	0.00000	0.00000
Acetaldehyde	0.00054	0.00029	1.85223
Total kg/h	107888.7596	84901.1306	

Stage # 41	88.48 C	148132.36 Pa	
	V Mass frac	L Mass frac	K
Water	0.08993	0.10180	0.89722
Ethanol	0.90697	0.89404	1.03031
Furfural	0.00256	0.00387	0.67306
Glycerol	0.00000	0.00000	0.00000
Acetaldehyde	0.00054	0.00030	1.84987
Total kg/h	107693.9346	84696.5817	

Stage # 42	88.67 C	149058.83 Pa	
	V Mass frac	L Mass frac	K
Water	0.09149	0.10392	0.89469
Ethanol	0.90492	0.89119	1.03191
Furfural	0.00305	0.00459	0.67484
Glycerol	0.00000	0.00000	0.00000
Acetaldehyde	0.00054	0.00030	1.84739
Total kg/h	107489.3928	84481.2245	

Stage # 43	88.85 C	149985.31 Pa	
	V Mass frac	L Mass frac	K
Water	0.09314	0.10617	0.89207
Ethanol	0.90271	0.88810	1.03365
Furfural	0.00361	0.00543	0.67660
Glycerol	0.00000	0.00000	0.00000
Acetaldehyde	0.00054	0.00030	1.84476
Total kg/h	107274.0073	84254.0882	

Stage # 44	89.04 C	150911.78 Pa	
	V Mass frac	L Mass frac	K

TRAY COMPOSITIONS

Water	0.09489	0.10858	0.88935
Ethanol	0.90029	0.88471	1.03555
Furfural	0.00427	0.00641	0.67832
Glycerol	0.00000	0.00000	0.00000
Acetaldehyde	0.00054	0.00030	1.84197
Total kg/h	107046.8638	84013.3865	

Stage # 45 89.23 C 151838.23 Pa

	V Mass frac	L Mass frac	K
Water	0.09675	0.11114	0.88652
Ethanol	0.89766	0.88100	1.03762
Furfural	0.00504	0.00755	0.67998
Glycerol	0.00000	0.00000	0.00000
Acetaldehyde	0.00055	0.00030	1.83901
Total kg/h	106806.1692	83759.1905	

Stage # 46 89.42 C 152764.70 Pa

	V Mass frac	L Mass frac	K
Water	0.09874	0.11390	0.88358
Ethanol	0.89477	0.87692	1.03991
Furfural	0.00594	0.00888	0.68157
Glycerol	0.00000	0.00000	0.00000
Acetaldehyde	0.00055	0.00030	1.83588
Total kg/h	106551.9803	83488.8140	

Stage # 47 89.61 C 153691.19 Pa

	V Mass frac	L Mass frac	K
Water	0.10088	0.11686	0.88050
Ethanol	0.89160	0.87242	1.04244
Furfural	0.00698	0.01042	0.68308
Glycerol	0.00000	0.00000	0.00000
Acetaldehyde	0.00055	0.00031	1.83256
Total kg/h	106281.5968	83201.2577	

Stage # 48 89.81 C 154617.66 Pa

	V Mass frac	L Mass frac	K
Water	0.10317	0.12006	0.87726
Ethanol	0.88811	0.86743	1.04526
Furfural	0.00818	0.01220	0.68447
Glycerol	0.00000	0.00000	0.00000
Acetaldehyde	0.00055	0.00031	1.82907
Total kg/h	105994.0263	82893.8143	

Stage # 49 90.00 C 155544.12 Pa

	V Mass frac	L Mass frac	K
Water	0.10564	0.12354	0.87385
Ethanol	0.88424	0.86190	1.04842
Furfural	0.00957	0.01426	0.68574
Glycerol	0.00000	0.00000	0.00000
Acetaldehyde	0.00055	0.00031	1.82543
Total kg/h	105686.5828	82562.5359	

Stage # 50 90.21 C 156470.59 Pa

	V Mass frac	L Mass frac	K
Water	0.10832	0.12733	0.87024
Ethanol	0.87996	0.85572	1.05198

TRAY COMPOSITIONS

Furfural	0.01117	0.01664	0.68685
Glycerol	0.00000	0.00000	0.00000
Acetaldehyde	0.00056	0.00031	1.82166
Total kg/h	105355.3044	82207.6141	

Stage # 51 90.41 C 157397.06 Pa

	V Mass frac	L Mass frac	K
Water	0.11123	0.13149	0.86639
Ethanol	0.87518	0.84879	1.05604
Furfural	0.01303	0.01940	0.68778
Glycerol	0.00000	0.00000	0.00000
Acetaldehyde	0.00056	0.00031	1.81785
Total kg/h	105000.3897	81821.9046	

Stage # 52 90.63 C 158323.55 Pa

	V Mass frac	L Mass frac	K
Water	0.11443	0.13610	0.86225
Ethanol	0.86983	0.84098	1.06070
Furfural	0.01517	0.02260	0.68851
Glycerol	0.00000	0.00000	0.00000
Acetaldehyde	0.00056	0.00032	1.81411
Total kg/h	104614.6731	81400.1771	

Stage # 53 90.85 C 159250.02 Pa

	V Mass frac	L Mass frac	K
Water	0.11796	0.14123	0.85778
Ethanol	0.86382	0.83213	1.06612
Furfural	0.01766	0.02632	0.68900
Glycerol	0.00000	0.00000	0.00000
Acetaldehyde	0.00056	0.00032	1.81062
Total kg/h	104192.9527	80936.6908	

Stage # 54 91.08 C 160176.47 Pa

	V Mass frac	L Mass frac	K
Water	0.12188	0.14701	0.85290
Ethanol	0.85701	0.82202	1.07250
Furfural	0.02053	0.03065	0.68923
Glycerol	0.00000	0.00000	0.31931
Acetaldehyde	0.00057	0.00032	1.80765
Total kg/h	103729.4593	80422.5792	

Stage # 55 91.32 C 161102.94 Pa

	V Mass frac	L Mass frac	K
Water	0.12629	0.15358	0.84750
Ethanol	0.84926	0.81038	1.08013
Furfural	0.02388	0.03571	0.68918
Glycerol	0.00000	0.00000	0.31924
Acetaldehyde	0.00057	0.00033	1.80565
Total kg/h	103215.3407	79845.1562	

Stage # 56 91.57 C 162029.42 Pa

	V Mass frac	L Mass frac	K
Water	0.13129	0.16117	0.84147
Ethanol	0.84036	0.79683	1.08945
Furfural	0.02778	0.04166	0.68885
Glycerol	0.00000	0.00000	0.31916

TRAY COMPOSITIONS

Acetaldehyde	0.00058	0.00033	1.80535
Total kg/h	102637.9176	79187.6669	

Stage # 57 91.85 C 162955.89 Pa

	V Mass frac	L Mass frac	K
Water	0.13704	0.17008	0.83461
Ethanol	0.83003	0.78089	1.10108
Furfural	0.03235	0.04869	0.68826
Glycerol	0.00000	0.00000	0.31907
Acetaldehyde	0.00058	0.00033	1.80793
Total kg/h	101980.4355	78425.2207	

Stage # 58 92.15 C 163882.36 Pa

	V Mass frac	L Mass frac	K
Water	0.14376	0.18078	0.82665
Ethanol	0.81793	0.76185	1.11603
Furfural	0.03773	0.05704	0.68752
Glycerol	0.00000	0.00000	0.31895
Acetaldehyde	0.00058	0.00033	1.81546
Total kg/h	101217.9963	77517.0579	

Stage # 59 92.48 C 164808.83 Pa

	V Mass frac	L Mass frac	K
Water	0.15178	0.19395	0.81722
Ethanol	0.80355	0.73869	1.13595
Furfural	0.04408	0.06702	0.68689
Glycerol	0.00000	0.00000	0.31881
Acetaldehyde	0.00059	0.00033	1.83153
Total kg/h	100309.8193	76418.8824	

Stage # 60 92.87 C 165735.31 Pa

	V Mass frac	L Mass frac	K
Water	0.16161	0.21079	0.80572
Ethanol	0.78618	0.70991	1.16379
Furfural	0.05162	0.07897	0.68700
Glycerol	0.00000	0.00000	0.31864
Acetaldehyde	0.00059	0.00033	1.86325
Total kg/h	99211.6509	75036.6234	

Stage # 61 93.33 C 166661.78 Pa

	V Mass frac	L Mass frac	K
Water	0.17407	0.23337	0.79123
Ethanol	0.76477	0.67310	1.20525
Furfural	0.06057	0.09320	0.68935
Glycerol	0.00000	0.00000	0.31842
Acetaldehyde	0.00059	0.00033	1.92545
Total kg/h	97829.3920	73210.1345	

Stage # 62 93.91 C 167588.25 Pa

	V Mass frac	L Mass frac	K
Water	0.19059	0.27891	0.75242
Ethanol	0.73775	0.63016	1.28910
Furfural	0.07107	0.09056	0.86415
Glycerol	0.00000	0.00000	0.00007
Acetaldehyde	0.00059	0.00036	1.79901
Total kg/h	96002.8960	100865.1652	

TRAY COMPOSITIONS

Stage # 63	94.58 C	168514.70 Pa	
	V Mass frac	L Mass frac	K
Water	0.21046	0.31103	0.75208
Ethanol	0.69689	0.56966	1.35968
Furfural	0.09225	0.11907	0.86108
Glycerol	0.00000	0.00000	0.00007
Acetaldehyde	0.00040	0.00023	1.91702
Total kg/h	91204.5407	97897.5230	

Stage # 64	95.69 C	169441.19 Pa	
	V Mass frac	L Mass frac	K
Water	0.24379	0.36737	0.75052
Ethanol	0.63201	0.46972	1.52170
Furfural	0.12394	0.16278	0.86112
Glycerol	0.00000	0.00000	0.00007
Acetaldehyde	0.00026	0.00013	2.24864
Total kg/h	88236.9127	92891.4791	

Stage # 65	97.91 C	170367.66 Pa	
	V Mass frac	L Mass frac	K
Water	0.30264	0.46473	0.75682
Ethanol	0.52421	0.30763	1.98039
Furfural	0.17301	0.22759	0.88346
Glycerol	0.00000	0.00000	0.00007
Acetaldehyde	0.00014	0.00005	3.40832
Total kg/h	83230.8547	85081.2422	

Stage # 66	103.19 C	171294.12 Pa	
	V Mass frac	L Mass frac	K
Water	0.40576	0.58096	0.81420
Ethanol	0.34700	0.12639	3.20066
Furfural	0.24718	0.29265	0.98463
Glycerol	0.00000	0.00000	0.00011
Acetaldehyde	0.00006	0.00001	7.15796
Total kg/h	75420.6177	77579.8237	

Stage # 67	109.55 C	172220.59 Pa	
	V Mass frac	L Mass frac	K
Water	0.53201	0.65532	0.90912
Ethanol	0.14433	0.03431	4.71058
Furfural	0.32365	0.31037	1.16777
Glycerol	0.00000	0.00000	0.00017
Acetaldehyde	0.00001	0.00000	12.23800
Total kg/h	67919.1993	73640.3811	

Stage # 68	112.48 C	173147.06 Pa	
	V Mass frac	L Mass frac	K
Water	0.61458	0.71439	0.95275
Ethanol	0.03946	0.00797	5.48082
Furfural	0.34596	0.27764	1.38004
Glycerol	0.00000	0.00000	0.00027
Acetaldehyde	0.00000	0.00000	15.31148
Total kg/h	63979.7637	69966.1340	

Stage # 69 113.53 C 174073.55 Pa

TRAY COMPOSITIONS

	V Mass frac	L Mass frac	K
Water	0.68063	0.79607	0.96127
Ethanol	0.00921	0.00177	5.84367
Furfural	0.31015	0.20215	1.72496
Glycerol	0.00000	0.00000	0.00050
Acetaldehyde	0.00000	0.00000	17.67282
Total kg/h	60305.5308	64764.6132	

Stage # 70 114.83 C 175000.02 Pa

	V Mass frac	L Mass frac	K
Water	0.77345	0.92512	0.96189
Ethanol	0.00204	0.00024	9.77600
Furfural	0.22451	0.07464	3.46048
Glycerol	0.00000	0.00000	0.00017
Acetaldehyde	0.00000	0.00000	34.62910
Total kg/h	55104.0029	9660.6174	

VALVE TRAY SIZING

Equip. 2 Tray No. 2

Tray Loadings	Vapor	Liquid
	112431.990 kg/h	89639.193 kg/h
	67561.810 m3/h	121.097 m3/h
Density	1.664 kg/m3	740.225 kg/m3
System factor	.....	1.000
Valve type : V-1		
Valve material : S.S.		
Valve thickness, gage	.....	12.000
Deck thickness, gage	.....	14.000
Tower internal diameter, m	.....	3.658
Tray spacing, m	.....	0.610
No. of tray liquid passes	.....	1
Downcomer dimension,	Width m / Length m	Area m2
Side	0.349 / 2.150	0.511
Avg. weir length m	.....	2.150
Weir height, m	.....	0.051
Flow path length m	.....	2.959
Flow path width m	.....	3.205
Tray area, m2	.....	10.507
Tray active area m2	.....	9.485
% flood	.....	79.096
Hole area m2	.....	1.802
Approx # of valves	.....	1522
Tray press loss, m	.....	0.125
Tray press loss, Pa	.....	907.116
Dry press drop, m	.....	0.070
Downcomer clearance m	.....	0.076
Downcomer head loss m	.....	0.007
Downcomer backup m	.....	0.218
Downcomer residence time, sec	.....	3.315
Actual tray efficiency (O'Connell)	.....	0.648
Actual tray efficiency (Chu)	.....	0.584

Equip. 2 Tray No. 3

Tray Loadings	Vapor	Liquid
	112284.339 kg/h	89491.535 kg/h
	67051.884 m3/h	120.897 m3/h
Density	1.675 kg/m3	740.231 kg/m3
System factor	.....	1.000
Valve type : V-1		
Valve material : S.S.		
Valve thickness, gage	.....	12.000
Deck thickness, gage	.....	14.000
Tower internal diameter, m	.....	3.658
Tray spacing, m	.....	0.610
No. of tray liquid passes	.....	1
Downcomer dimension,	Width m / Length m	Area m2
Side	0.349 / 2.150	0.511
Avg. weir length m	.....	2.150
Weir height, m	.....	0.051
Flow path length m	.....	2.959

VALVE TRAY SIZING

Flow path width m	3.205
Tray area, m2	10.507
Tray active area m2	9.485
% flood	78.664
Hole area m2	1.802
Approx # of valves	1522
Tray press loss, m	0.124
Tray press loss, Pa	902.345
Dry press drop, m	0.069
Downcomer clearance m	0.076
Downcomer head loss m	0.007
Downcomer backup m	0.217
Downcomer residence time, sec	3.309
Actual tray efficiency (O'Connell)	0.648
Actual tray efficiency (Chu)	0.584

Equip. 2 Tray No. 4

Tray Loadings	Vapor	Liquid
	112148.616 kg/h	89355.812 kg/h
	66553.126 m3/h	120.714 m3/h
Density	1.685 kg/m3	740.228 kg/m3
System factor		1.000
Valve type : V-1		
Valve material : S.S.		
Valve thickness, gage		12.000
Deck thickness, gage		14.000
Tower internal diameter, m		3.658
Tray spacing, m		0.610
No. of tray liquid passes		1

Downcomer dimension,	Width m	Length m	Area m2
Side	0.349	2.150	0.511

Avg. weir length m	2.150
Weir height, m	0.051
Flow path length m	2.959
Flow path width m	3.205
Tray area, m2	10.507
Tray active area m2	9.485
% flood	78.242
Hole area m2	1.802
Approx # of valves	1522
Tray press loss, m	0.124
Tray press loss, Pa	897.740
Dry press drop, m	0.069
Downcomer clearance m	0.076
Downcomer head loss m	0.007
Downcomer backup m	0.217
Downcomer residence time, sec	3.304
Actual tray efficiency (O'Connell)	0.648
Actual tray efficiency (Chu)	0.583

Equip. 2 Tray No. 5

Tray Loadings	Vapor	Liquid
	112020.299 kg/h	89227.509 kg/h
	66063.254 m3/h	120.542 m3/h

VALVE TRAY SIZING

Density	1.696 kg/m3	740.218 kg/m3
System factor	.....	1.000
Valve type : V-1		
Valve material : S.S.		
Valve thickness, gage	.....	12.000
Deck thickness, gage	.....	14.000
Tower internal diameter, m	.....	3.658
Tray spacing, m	.....	0.610
No. of tray liquid passes	.....	1
Downcomer dimension,	Width m / Length m	Area m2
Side	0.349 / 2.150	0.511
Avg. weir length m	.....	2.150
Weir height, m	.....	0.051
Flow path length m	.....	2.959
Flow path width m	.....	3.205
Tray area, m2	.....	10.507
Tray active area m2	.....	9.485
% flood	.....	77.829
Hole area m2	.....	1.802
Approx # of valves	.....	1522
Tray press loss, m	.....	0.123
Tray press loss, Pa	.....	893.255
Dry press drop, m	.....	0.068
Downcomer clearance m	.....	0.076
Downcomer head loss m	.....	0.007
Downcomer backup m	.....	0.216
Downcomer residence time, sec	.....	3.298
Actual tray efficiency (O'Connell)	.....	0.647
Actual tray efficiency (Chu)	.....	0.583

Equip. 2 Tray No. 6

Tray Loadings	Vapor	Liquid
	111898.325 kg/h	89105.535 kg/h
	65581.907 m3/h	120.380 m3/h
Density	1.706 kg/m3	740.202 kg/m3
System factor	.....	1.000
Valve type : V-1		
Valve material : S.S.		
Valve thickness, gage	.....	12.000
Deck thickness, gage	.....	14.000
Tower internal diameter, m	.....	3.658
Tray spacing, m	.....	0.610
No. of tray liquid passes	.....	1
Downcomer dimension,	Width m / Length m	Area m2
Side	0.349 / 2.150	0.511
Avg. weir length m	.....	2.150
Weir height, m	.....	0.051
Flow path length m	.....	2.959
Flow path width m	.....	3.205
Tray area, m2	.....	10.507
Tray active area m2	.....	9.485
% flood	.....	77.424
Hole area m2	.....	1.802
Approx # of valves	.....	1522
Tray press loss, m	.....	0.122

VALVE TRAY SIZING

Tray press loss, Pa	888.880
Dry press drop, m	0.068
Downcomer clearance m	0.076
Downcomer head loss m	0.007
Downcomer backup m	0.215
Downcomer residence time, sec	3.293
Actual tray efficiency (O'Connell)	0.647
Actual tray efficiency (Chu)	0.583

Equip. 2 Tray No. 7

Tray Loadings	Vapor	Liquid
	111781.220 kg/h	88988.430 kg/h
	65108.472 m3/h	120.225 m3/h
Density	1.717 kg/m3	740.182 kg/m3
System factor		1.000
Valve type : V-1		
Valve material : S.S.		
Valve thickness, gage		12.000
Deck thickness, gage		14.000
Tower internal diameter, m		3.658
Tray spacing, m		0.610
No. of tray liquid passes		1

Downcomer dimension,	Width m	Length m	Area m2
Side	0.368	2.201	0.552

Avg. weir length m	2.201
Weir height, m	0.051
Flow path length m	2.921
Flow path width m	3.219
Tray area, m2	10.507
Tray active area m2	9.402
% flood	77.348
Hole area m2	1.786
Approx # of valves	1509
Tray press loss, m	0.123
Tray press loss, Pa	889.303
Dry press drop, m	0.068
Downcomer clearance m	0.076
Downcomer head loss m	0.007
Downcomer backup m	0.215
Downcomer residence time, sec	3.550
Actual tray efficiency (O'Connell)	0.646
Actual tray efficiency (Chu)	0.582

Equip. 2 Tray No. 8

Tray Loadings	Vapor	Liquid
	111667.794 kg/h	88875.011 kg/h
	64642.351 m3/h	120.076 m3/h
Density	1.727 kg/m3	740.159 kg/m3
System factor		1.000
Valve type : V-1		
Valve material : S.S.		
Valve thickness, gage		12.000
Deck thickness, gage		14.000
Tower internal diameter, m		3.658

VALVE TRAY SIZING

Tray spacing, m	.....		0.610
No. of tray liquid passes	.....		1
Downcomer dimension,	Width m	Length m	Area m2
Side	0.368	2.201	0.552
Avg. weir length m	.....		2.201
Weir height, m	.....		0.051
Flow path length m	.....		2.921
Flow path width m	.....		3.219
Tray area, m2	.....		10.507
Tray active area m2	.....		9.402
% flood	.....		76.983
Hole area m2	.....		1.786
Approx # of valves	.....		1509
Tray press loss, m	.....		0.122
Tray press loss, Pa	.....		885.041
Dry press drop, m	.....		0.068
Downcomer clearance m	.....		0.076
Downcomer head loss m	.....		0.007
Downcomer backup m	.....		0.214
Downcomer residence time, sec	.....		3.544
Actual tray efficiency (O'Connell)	.....		0.646
Actual tray efficiency (Chu)	.....		0.582

Equip. 2 Tray No. 9

Tray Loadings	Vapor	Liquid
	111557.521 kg/h	88764.724 kg/h
	64183.369 m3/h	119.931 m3/h
Density	1.738 kg/m3	740.134 kg/m3
System factor	.....	1.000
Valve type : V-1		
Valve material : S.S.		
Valve thickness, gage	.....	12.000
Deck thickness, gage	.....	14.000
Tower internal diameter, m	.....	3.658
Tray spacing, m	.....	0.610
No. of tray liquid passes	.....	1
Downcomer dimension,	Width m / Length m	Area m2
Side	0.368 / 2.201	0.552
Avg. weir length m	.....	2.201
Weir height, m	.....	0.051
Flow path length m	.....	2.921
Flow path width m	.....	3.219
Tray area, m2	.....	10.507
Tray active area m2	.....	9.402
% flood	.....	76.623
Hole area m2	.....	1.786
Approx # of valves	.....	1509
Tray press loss, m	.....	0.121
Tray press loss, Pa	.....	880.859
Dry press drop, m	.....	0.067
Downcomer clearance m	.....	0.076
Downcomer head loss m	.....	0.007
Downcomer backup m	.....	0.213
Downcomer residence time, sec	.....	3.538
Actual tray efficiency (O'Connell)	.....	0.645

VALVE TRAY SIZING

Actual tray efficiency (Chu) 0.582

Equip. 2 Tray No. 10

Tray Loadings	Vapor	Liquid
	111449.920 kg/h	88657.138 kg/h
	63731.337 m3/h	119.790 m3/h
Density	1.749 kg/m3	740.107 kg/m3
System factor	.....	1.000
Valve type : V-1		
Valve material : S.S.		
Valve thickness, gage	.....	12.000
Deck thickness, gage	.....	14.000
Tower internal diameter, m	.....	3.658
Tray spacing, m	.....	0.610
No. of tray liquid passes	.....	1
Downcomer dimension,	Width m / Length m	Area m2
Side	0.368 / 2.201	0.552
Avg. weir length m	.....	2.201
Weir height, m	.....	0.051
Flow path length m	.....	2.921
Flow path width m	.....	3.219
Tray area, m2	.....	10.507
Tray active area m2	.....	9.402
% flood	.....	76.269
Hole area m2	.....	1.786
Approx # of valves	.....	1509
Tray press loss, m	.....	0.121
Tray press loss, Pa	.....	876.752
Dry press drop, m	.....	0.067
Downcomer clearance m	.....	0.076
Downcomer head loss m	.....	0.007
Downcomer backup m	.....	0.213
Downcomer residence time, sec	.....	3.532
Actual tray efficiency (O'Connell)	.....	0.645
Actual tray efficiency (Chu)	.....	0.581

Equip. 2 Tray No. 11

Tray Loadings	Vapor	Liquid
	111344.552 kg/h	88551.762 kg/h
	63286.089 m3/h	119.652 m3/h
Density	1.759 kg/m3	740.078 kg/m3
System factor	.....	1.000
Valve type : V-1		
Valve material : S.S.		
Valve thickness, gage	.....	12.000
Deck thickness, gage	.....	14.000
Tower internal diameter, m	.....	3.658
Tray spacing, m	.....	0.610
No. of tray liquid passes	.....	1
Downcomer dimension,	Width m / Length m	Area m2
Side	0.368 / 2.201	0.552
Avg. weir length m	.....	2.201
Weir height, m	.....	0.051
Flow path length m	.....	2.921

VALVE TRAY SIZING

Flow path width m	3.219
Tray area, m2	10.507
Tray active area m2	9.402
% flood	75.920
Hole area m2	1.786
Approx # of valves	1509
Tray press loss, m	0.120
Tray press loss, Pa	872.717
Dry press drop, m	0.066
Downcomer clearance m	0.076
Downcomer head loss m	0.007
Downcomer backup m	0.212
Downcomer residence time, sec	3.526
Actual tray efficiency (O'Connell)	0.645
Actual tray efficiency (Chu)	0.581

Equip. 2 Tray No. 12

Tray Loadings	Vapor	Liquid
	111240.715 kg/h	88447.932 kg/h
	62847.239 m3/h	119.516 m3/h
Density	1.770 kg/m3	740.049 kg/m3
System factor		1.000
Valve type : V-1		
Valve material : S.S.		
Valve thickness, gage		12.000
Deck thickness, gage		14.000
Tower internal diameter, m		3.658
Tray spacing, m		0.610
No. of tray liquid passes		1

Downcomer dimension, Side	Width m	Length m	Area m2
	0.368	2.201	0.552

Avg. weir length m	2.201
Weir height, m	0.051
Flow path length m	2.921
Flow path width m	3.219
Tray area, m2	10.507
Tray active area m2	9.402
% flood	75.575
Hole area m2	1.786
Approx # of valves	1509
Tray press loss, m	0.120
Tray press loss, Pa	868.746
Dry press drop, m	0.066
Downcomer clearance m	0.076
Downcomer head loss m	0.007
Downcomer backup m	0.212
Downcomer residence time, sec	3.521
Actual tray efficiency (O'Connell)	0.644
Actual tray efficiency (Chu)	0.581

Equip. 2 Tray No. 13

Tray Loadings	Vapor	Liquid
	111138.302 kg/h	88345.506 kg/h
	62414.820 m3/h	119.383 m3/h

VALVE TRAY SIZING

Density	1.781 kg/m3	740.020 kg/m3
System factor	.....	1.000
Valve type : V-1		
Valve material : S.S.		
Valve thickness, gage	.....	12.000
Deck thickness, gage	.....	14.000
Tower internal diameter, m	.....	3.658
Tray spacing, m	.....	0.610
No. of tray liquid passes	.....	1
Downcomer dimension,	Width m / Length m	Area m2
Side	0.368 / 2.201	0.552
Avg. weir length m	.....	2.201
Weir height, m	.....	0.051
Flow path length m	.....	2.921
Flow path width m	.....	3.219
Tray area, m2	.....	10.507
Tray active area m2	.....	9.402
% flood	.....	75.235
Hole area m2	.....	1.786
Approx # of valves	.....	1509
Tray press loss, m	.....	0.119
Tray press loss, Pa	.....	864.838
Dry press drop, m	.....	0.065
Downcomer clearance m	.....	0.076
Downcomer head loss m	.....	0.007
Downcomer backup m	.....	0.211
Downcomer residence time, sec	.....	3.515
Actual tray efficiency (O'Connell)	.....	0.644
Actual tray efficiency (Chu)	.....	0.580

Equip. 2 Tray No. 14

Tray Loadings	Vapor	Liquid
	111036.889 kg/h	88244.099 kg/h
	61988.628 m3/h	119.250 m3/h
Density	1.791 kg/m3	739.991 kg/m3
System factor	.....	1.000
Valve type : V-1		
Valve material : S.S.		
Valve thickness, gage	.....	12.000
Deck thickness, gage	.....	14.000
Tower internal diameter, m	.....	3.658
Tray spacing, m	.....	0.610
No. of tray liquid passes	.....	1
Downcomer dimension,	Width m / Length m	Area m2
Side	0.368 / 2.201	0.552
Avg. weir length m	.....	2.201
Weir height, m	.....	0.051
Flow path length m	.....	2.921
Flow path width m	.....	3.219
Tray area, m2	.....	10.507
Tray active area m2	.....	9.402
% flood	.....	74.899
Hole area m2	.....	1.786
Approx # of valves	.....	1509
Tray press loss, m	.....	0.119

VALVE TRAY SIZING

Tray press loss, Pa	860.989
Dry press drop, m	0.065
Downcomer clearance m	0.076
Downcomer head loss m	0.007
Downcomer backup m	0.210
Downcomer residence time, sec	3.510
Actual tray efficiency (O'Connell)	0.644
Actual tray efficiency (Chu)	0.580

Equip. 2 Tray No. 15

Tray Loadings	Vapor	Liquid
	110936.298 kg/h	88143.508 kg/h
	61568.575 m3/h	119.119 m3/h
Density	1.802 kg/m3	739.962 kg/m3
System factor		1.000
Valve type : V-1		
Valve material : S.S.		
Valve thickness, gage		12.000
Deck thickness, gage		14.000
Tower internal diameter, m		3.658
Tray spacing, m		0.610
No. of tray liquid passes		1
Downcomer dimension,	Width m / Length m	Area m2
Side	0.368 / 2.201	0.552
Avg. weir length m		2.201
Weir height, m		0.051
Flow path length m		2.921
Flow path width m		3.219
Tray area, m2		10.507
Tray active area m2		9.402
% flood		74.567
Hole area m2		1.786
Approx # of valves		1509
Tray press loss, m		0.118
Tray press loss, Pa		857.198
Dry press drop, m		0.064
Downcomer clearance m		0.076
Downcomer head loss m		0.007
Downcomer backup m		0.210
Downcomer residence time, sec		3.504
Actual tray efficiency (O'Connell)		0.643
Actual tray efficiency (Chu)		0.580

Equip. 2 Tray No. 16

Tray Loadings	Vapor	Liquid
	110835.763 kg/h	88042.974 kg/h
	61154.281 m3/h	118.987 m3/h
Density	1.812 kg/m3	739.935 kg/m3
System factor		1.000
Valve type : V-1		
Valve material : S.S.		
Valve thickness, gage		12.000
Deck thickness, gage		14.000
Tower internal diameter, m		3.658

VALVE TRAY SIZING

Tray spacing, m			0.610
No. of tray liquid passes			1
Downcomer dimension,	Width m	Length m	Area m2
Side	0.368	2.201	0.552
Avg. weir length m			2.201
Weir height, m			0.051
Flow path length m			2.921
Flow path width m			3.219
Tray area, m2			10.507
Tray active area m2			9.402
% flood			74.238
Hole area m2			1.786
Approx # of valves			1509
Tray press loss, m			0.118
Tray press loss, Pa			853.456
Dry press drop, m			0.064
Downcomer clearance m			0.076
Downcomer head loss m			0.007
Downcomer backup m			0.209
Downcomer residence time, sec			3.499
Actual tray efficiency (O'Connell)			0.643
Actual tray efficiency (Chu)			0.579

Equip. 2 Tray No. 17

Tray Loadings	Vapor		Liquid
	110735.633 kg/h		87942.843 kg/h
	60745.997 m3/h		118.856 m3/h
Density	1.823 kg/m3		739.909 kg/m3
System factor			1.000
Valve type : V-1			
Valve material : S.S.			
Valve thickness, gage			12.000
Deck thickness, gage			14.000
Tower internal diameter, m			3.505
Tray spacing, m			0.610
No. of tray liquid passes			1
Downcomer dimension,	Width m	Length m	Area m2
Side	0.349	2.100	0.500
Avg. weir length m			2.100
Weir height, m			0.051
Flow path length m			2.807
Flow path width m			3.082
Tray area, m2			9.650
Tray active area m2			8.651
% flood			79.911
Hole area m2			1.644
Approx # of valves			1388
Tray press loss, m			0.130
Tray press loss, Pa			940.611
Dry press drop, m			0.075
Downcomer clearance m			0.076
Downcomer head loss m			0.008
Downcomer backup m			0.223
Downcomer residence time, sec			3.376
Actual tray efficiency (O'Connell)			0.642

VALVE TRAY SIZING

Actual tray efficiency (Chu) 0.579

Equip. 2 Tray No. 18

Tray Loadings	Vapor	Liquid
	110635.056 kg/h	87842.252 kg/h
	60343.252 m3/h	118.724 m3/h
Density	1.833 kg/m3	739.886 kg/m3
System factor	.....	1.000
Valve type : V-1		
Valve material : S.S.		
Valve thickness, gage	.....	12.000
Deck thickness, gage	.....	14.000
Tower internal diameter, m	.....	3.505
Tray spacing, m	.....	0.610
No. of tray liquid passes	.....	1
Downcomer dimension,	Width m / Length m	Area m2
Side	0.349 / 2.100	0.500
Avg. weir length m	.....	2.100
Weir height, m	.....	0.051
Flow path length m	.....	2.807
Flow path width m	.....	3.082
Tray area, m2	.....	9.650
Tray active area m2	.....	8.651
% flood	.....	79.562
Hole area m2	.....	1.644
Approx # of valves	.....	1388
Tray press loss, m	.....	0.129
Tray press loss, Pa	.....	936.337
Dry press drop, m	.....	0.074
Downcomer clearance m	.....	0.076
Downcomer head loss m	.....	0.008
Downcomer backup m	.....	0.222
Downcomer residence time, sec	.....	3.370
Actual tray efficiency (O'Connell)	.....	0.642
Actual tray efficiency (Chu)	.....	0.579

Equip. 2 Tray No. 19

Tray Loadings	Vapor	Liquid
	110533.720 kg/h	87740.938 kg/h
	59945.929 m3/h	118.591 m3/h
Density	1.844 kg/m3	739.865 kg/m3
System factor	.....	1.000
Valve type : V-1		
Valve material : S.S.		
Valve thickness, gage	.....	12.000
Deck thickness, gage	.....	14.000
Tower internal diameter, m	.....	3.505
Tray spacing, m	.....	0.610
No. of tray liquid passes	.....	1
Downcomer dimension,	Width m / Length m	Area m2
Side	0.349 / 2.100	0.500
Avg. weir length m	.....	2.100
Weir height, m	.....	0.051
Flow path length m	.....	2.807

VALVE TRAY SIZING

Flow path width m	3.082
Tray area, m2	9.650
Tray active area m2	8.651
% flood	79.217
Hole area m2	1.644
Approx # of valves	1388
Tray press loss, m	0.128
Tray press loss, Pa	932.114
Dry press drop, m	0.073
Downcomer clearance m	0.076
Downcomer head loss m	0.008
Downcomer backup m	0.222
Downcomer residence time, sec	3.364
Actual tray efficiency (O'Connell)	0.642
Actual tray efficiency (Chu)	0.578

Equip. 2 Tray No. 20

Tray Loadings	Vapor	Liquid
	110432.215 kg/h	87639.418 kg/h
	59554.399 m3/h	118.456 m3/h
Density	1.854 kg/m3	739.847 kg/m3
System factor		1.000
Valve type : V-1		
Valve material : S.S.		
Valve thickness, gage		12.000
Deck thickness, gage		14.000
Tower internal diameter, m		3.505
Tray spacing, m		0.610
No. of tray liquid passes		1

Downcomer dimension, Side	Width m	Length m	Area m2
	0.349	2.100	0.500

Avg. weir length m	2.100
Weir height, m	0.051
Flow path length m	2.807
Flow path width m	3.082
Tray area, m2	9.650
Tray active area m2	8.651
% flood	78.876
Hole area m2	1.644
Approx # of valves	1388
Tray press loss, m	0.128
Tray press loss, Pa	927.948
Dry press drop, m	0.073
Downcomer clearance m	0.076
Downcomer head loss m	0.008
Downcomer backup m	0.221
Downcomer residence time, sec	3.359
Actual tray efficiency (O'Connell)	0.641
Actual tray efficiency (Chu)	0.578

Equip. 2 Tray No. 21

Tray Loadings	Vapor	Liquid
	110328.860 kg/h	87536.077 kg/h
	59167.759 m3/h	118.319 m3/h

VALVE TRAY SIZING

Density	1.865 kg/m3	739.833 kg/m3
System factor	.....	1.000
Valve type : V-1		
Valve material : S.S.		
Valve thickness, gage	.....	12.000
Deck thickness, gage	.....	14.000
Tower internal diameter, m	.....	3.505
Tray spacing, m	.....	0.610
No. of tray liquid passes	.....	1
Downcomer dimension,	Width m / Length m	Area m2
Side	0.349 / 2.100	0.500
Avg. weir length m	.....	2.100
Weir height, m	.....	0.051
Flow path length m	.....	2.807
Flow path width m	.....	3.082
Tray area, m2	.....	9.650
Tray active area m2	.....	8.651
% flood	.....	78.537
Hole area m2	.....	1.644
Approx # of valves	.....	1388
Tray press loss, m	.....	0.127
Tray press loss, Pa	.....	923.821
Dry press drop, m	.....	0.072
Downcomer clearance m	.....	0.076
Downcomer head loss m	.....	0.007
Downcomer backup m	.....	0.221
Downcomer residence time, sec	.....	3.353
Actual tray efficiency (O'Connell)	.....	0.641
Actual tray efficiency (Chu)	.....	0.578

Equip. 2 Tray No. 22

Tray Loadings	Vapor	Liquid
	110224.427 kg/h	87431.630 kg/h
	58786.491 m3/h	118.179 m3/h
Density	1.875 kg/m3	739.823 kg/m3
System factor	.....	1.000
Valve type : V-1		
Valve material : S.S.		
Valve thickness, gage	.....	12.000
Deck thickness, gage	.....	14.000
Tower internal diameter, m	.....	3.505
Tray spacing, m	.....	0.610
No. of tray liquid passes	.....	1
Downcomer dimension,	Width m / Length m	Area m2
Side	0.349 / 2.100	0.500
Avg. weir length m	.....	2.100
Weir height, m	.....	0.051
Flow path length m	.....	2.807
Flow path width m	.....	3.082
Tray area, m2	.....	9.650
Tray active area m2	.....	8.651
% flood	.....	78.202
Hole area m2	.....	1.644
Approx # of valves	.....	1388
Tray press loss, m	.....	0.127

VALVE TRAY SIZING

Tray press loss, Pa	919.742
Dry press drop, m	0.072
Downcomer clearance m	0.076
Downcomer head loss m	0.007
Downcomer backup m	0.220
Downcomer residence time, sec	3.348
Actual tray efficiency (O'Connell)	0.641
Actual tray efficiency (Chu)	0.577

Equip. 2 Tray No. 23

Tray Loadings	Vapor	Liquid
	110117.847 kg/h	87325.050 kg/h
	58410.061 m3/h	118.036 m3/h
Density	1.885 kg/m3	739.818 kg/m3
System factor		1.000
Valve type : V-1		
Valve material : S.S.		
Valve thickness, gage		12.000
Deck thickness, gage		14.000
Tower internal diameter, m		3.505
Tray spacing, m		0.610
No. of tray liquid passes		1
Downcomer dimension,	Width m / Length m	Area m2
Side	0.349 / 2.100	0.500
Avg. weir length m		2.100
Weir height, m		0.051
Flow path length m		2.807
Flow path width m		3.082
Tray area, m2		9.650
Tray active area m2		8.651
% flood		77.869
Hole area m2		1.644
Approx # of valves		1388
Tray press loss, m		0.126
Tray press loss, Pa		915.699
Dry press drop, m		0.071
Downcomer clearance m		0.076
Downcomer head loss m		0.007
Downcomer backup m		0.219
Downcomer residence time, sec		3.343
Actual tray efficiency (O'Connell)		0.640
Actual tray efficiency (Chu)		0.577

Equip. 2 Tray No. 24

Tray Loadings	Vapor	Liquid
	110009.573 kg/h	87216.776 kg/h
	58038.781 m3/h	117.889 m3/h
Density	1.895 kg/m3	739.820 kg/m3
System factor		1.000
Valve type : V-1		
Valve material : S.S.		
Valve thickness, gage		12.000
Deck thickness, gage		14.000
Tower internal diameter, m		3.505

VALVE TRAY SIZING

Tray spacing, m	.....		0.610
No. of tray liquid passes	.....		1
Downcomer dimension,	Width m	Length m	Area m2
Side	0.368	2.150	0.540
Avg. weir length m	.....		2.150
Weir height, m	.....		0.051
Flow path length m	.....		2.769
Flow path width m	.....		3.095
Tray area, m2	.....		9.650
Tray active area m2	.....		8.570
% flood	.....		78.130
Hole area m2	.....		1.628
Approx # of valves	.....		1375
Tray press loss, m	.....		0.126
Tray press loss, Pa	.....		917.540
Dry press drop, m	.....		0.072
Downcomer clearance m	.....		0.076
Downcomer head loss m	.....		0.007
Downcomer backup m	.....		0.219
Downcomer residence time, sec	.....		3.607
Actual tray efficiency (O'Connell)	.....		0.640
Actual tray efficiency (Chu)	.....		0.576

Equip. 2 Tray No. 25

Tray Loadings	Vapor	Liquid
	109898.564 kg/h	87105.781 kg/h
	57672.108 m3/h	117.738 m3/h
Density	1.906 kg/m3	739.827 kg/m3
System factor	.....	1.000
Valve type : V-1		
Valve material : S.S.		
Valve thickness, gage	.....	12.000
Deck thickness, gage	.....	14.000
Tower internal diameter, m	.....	3.505
Tray spacing, m	.....	0.610
No. of tray liquid passes	.....	1
Downcomer dimension,	Width m / Length m	Area m2
Side	0.368 / 2.150	0.540
Avg. weir length m	.....	2.150
Weir height, m	.....	0.051
Flow path length m	.....	2.769
Flow path width m	.....	3.095
Tray area, m2	.....	9.650
Tray active area m2	.....	8.570
% flood	.....	77.799
Hole area m2	.....	1.628
Approx # of valves	.....	1375
Tray press loss, m	.....	0.126
Tray press loss, Pa	.....	913.503
Dry press drop, m	.....	0.072
Downcomer clearance m	.....	0.076
Downcomer head loss m	.....	0.007
Downcomer backup m	.....	0.218
Downcomer residence time, sec	.....	3.602
Actual tray efficiency (O'Connell)	.....	0.639

VALVE TRAY SIZING

Actual tray efficiency (Chu) 0.576

Equip. 2 Tray No. 26

Tray Loadings	Vapor	Liquid
	109785.116 kg/h	86992.333 kg/h
	57310.302 m3/h	117.582 m3/h
Density	1.916 kg/m3	739.842 kg/m3
System factor	.....	1.000
Valve type : V-1		
Valve material : S.S.		
Valve thickness, gage	.....	12.000
Deck thickness, gage	.....	14.000
Tower internal diameter, m	.....	3.505
Tray spacing, m	.....	0.610
No. of tray liquid passes	.....	1
Downcomer dimension,	Width m / Length m	Area m2
Side	0.368 / 2.150	0.540
Avg. weir length m	.....	2.150
Weir height, m	.....	0.051
Flow path length m	.....	2.769
Flow path width m	.....	3.095
Tray area, m2	.....	9.650
Tray active area m2	.....	8.570
% flood	.....	77.470
Hole area m2	.....	1.628
Approx # of valves	.....	1375
Tray press loss, m	.....	0.125
Tray press loss, Pa	.....	909.503
Dry press drop, m	.....	0.071
Downcomer clearance m	.....	0.076
Downcomer head loss m	.....	0.007
Downcomer backup m	.....	0.218
Downcomer residence time, sec	.....	3.597
Actual tray efficiency (O'Connell)	.....	0.639
Actual tray efficiency (Chu)	.....	0.576

Equip. 2 Tray No. 27

Tray Loadings	Vapor	Liquid
	109668.642 kg/h	86875.866 kg/h
	56953.120 m3/h	117.421 m3/h
Density	1.926 kg/m3	739.866 kg/m3
System factor	.....	1.000
Valve type : V-1		
Valve material : S.S.		
Valve thickness, gage	.....	12.000
Deck thickness, gage	.....	14.000
Tower internal diameter, m	.....	3.505
Tray spacing, m	.....	0.610
No. of tray liquid passes	.....	1
Downcomer dimension,	Width m / Length m	Area m2
Side	0.368 / 2.150	0.540
Avg. weir length m	.....	2.150
Weir height, m	.....	0.051
Flow path length m	.....	2.769

VALVE TRAY SIZING

Flow path width m	3.095
Tray area, m2	9.650
Tray active area m2	8.570
% flood	77.143
Hole area m2	1.628
Approx # of valves	1375
Tray press loss, m	0.125
Tray press loss, Pa	905.534
Dry press drop, m	0.071
Downcomer clearance m	0.076
Downcomer head loss m	0.007
Downcomer backup m	0.217
Downcomer residence time, sec	3.592
Actual tray efficiency (O'Connell)	0.638
Actual tray efficiency (Chu)	0.575

Equip. 2 Tray No. 28

Tray Loadings	Vapor	Liquid
	109548.879 kg/h	86756.097 kg/h
	56600.482 m3/h	117.254 m3/h
Density	1.935 kg/m3	739.898 kg/m3
System factor		1.000
Valve type : V-1		
Valve material : S.S.		
Valve thickness, gage		12.000
Deck thickness, gage		14.000
Tower internal diameter, m		3.505
Tray spacing, m		0.610
No. of tray liquid passes		1
Downcomer dimension, Side	Width m: 0.368 / Length m: 2.150	Area m2: 0.540
Avg. weir length m		2.150
Weir height, m		0.051
Flow path length m		2.769
Flow path width m		3.095
Tray area, m2		9.650
Tray active area m2		8.570
% flood		76.818
Hole area m2		1.628
Approx # of valves		1375
Tray press loss, m		0.124
Tray press loss, Pa		901.593
Dry press drop, m		0.070
Downcomer clearance m		0.076
Downcomer head loss m		0.007
Downcomer backup m		0.216
Downcomer residence time, sec		3.587
Actual tray efficiency (O'Connell)		0.638
Actual tray efficiency (Chu)		0.575

Equip. 2 Tray No. 29

Tray Loadings	Vapor	Liquid
	109425.020 kg/h	86632.245 kg/h
	56252.048 m3/h	117.080 m3/h

VALVE TRAY SIZING

Density	1.945 kg/m3	739.941 kg/m3
System factor	.....	1.000
Valve type : V-1		
Valve material : S.S.		
Valve thickness, gage	.....	12.000
Deck thickness, gage	.....	14.000
Tower internal diameter, m	.....	3.505
Tray spacing, m	.....	0.610
No. of tray liquid passes	.....	1
Downcomer dimension,	Width m / Length m	Area m2
Side	0.368 / 2.150	0.540
Avg. weir length m	.....	2.150
Weir height, m	.....	0.051
Flow path length m	.....	2.769
Flow path width m	.....	3.095
Tray area, m2	.....	9.650
Tray active area m2	.....	8.570
% flood	.....	76.494
Hole area m2	.....	1.628
Approx # of valves	.....	1375
Tray press loss, m	.....	0.124
Tray press loss, Pa	.....	897.674
Dry press drop, m	.....	0.070
Downcomer clearance m	.....	0.076
Downcomer head loss m	.....	0.007
Downcomer backup m	.....	0.216
Downcomer residence time, sec	.....	3.582
Actual tray efficiency (O'Connell)	.....	0.638
Actual tray efficiency (Chu)	.....	0.575

Equip. 2 Tray No. 30

Tray Loadings	Vapor	Liquid
	109297.341 kg/h	86504.551 kg/h
	55908.046 m3/h	116.899 m3/h
Density	1.955 kg/m3	739.996 kg/m3
System factor	.....	1.000
Valve type : V-1		
Valve material : S.S.		
Valve thickness, gage	.....	12.000
Deck thickness, gage	.....	14.000
Tower internal diameter, m	.....	3.505
Tray spacing, m	.....	0.610
No. of tray liquid passes	.....	1
Downcomer dimension,	Width m / Length m	Area m2
Side	0.368 / 2.150	0.540
Avg. weir length m	.....	2.150
Weir height, m	.....	0.051
Flow path length m	.....	2.769
Flow path width m	.....	3.095
Tray area, m2	.....	9.650
Tray active area m2	.....	8.570
% flood	.....	76.172
Hole area m2	.....	1.628
Approx # of valves	.....	1375
Tray press loss, m	.....	0.123

VALVE TRAY SIZING

Tray press loss, Pa	.....	893.780
Dry press drop, m	.....	0.069
Downcomer clearance m	.....	0.076
Downcomer head loss m	.....	0.007
Downcomer backup m	.....	0.215
Downcomer residence time, sec	.....	3.578
Actual tray efficiency (O'Connell)	.....	0.637
Actual tray efficiency (Chu)	.....	0.574

Equip. 2 Tray No. 31

Tray Loadings	Vapor	Liquid
	109164.623 kg/h	86371.826 kg/h
	55567.982 m3/h	116.708 m3/h
Density	1.965 kg/m3	740.065 kg/m3
System factor	.....	1.000
Valve type : V-1		
Valve material : S.S.		
Valve thickness, gage	.....	12.000
Deck thickness, gage	.....	14.000
Tower internal diameter, m	.....	3.505
Tray spacing, m	.....	0.610
No. of tray liquid passes	.....	1
Downcomer dimension,	Width m / Length m	Area m2
Side	0.368 / 2.150	0.540
Avg. weir length m	.....	2.150
Weir height, m	.....	0.051
Flow path length m	.....	2.769
Flow path width m	.....	3.095
Tray area, m2	.....	9.650
Tray active area m2	.....	8.570
% flood	.....	75.849
Hole area m2	.....	1.628
Approx # of valves	.....	1375
Tray press loss, m	.....	0.123
Tray press loss, Pa	.....	889.901
Dry press drop, m	.....	0.068
Downcomer clearance m	.....	0.076
Downcomer head loss m	.....	0.007
Downcomer backup m	.....	0.215
Downcomer residence time, sec	.....	3.574
Actual tray efficiency (O'Connell)	.....	0.637
Actual tray efficiency (Chu)	.....	0.574

Equip. 2 Tray No. 32

Tray Loadings	Vapor	Liquid
	109027.546 kg/h	86234.756 kg/h
	55232.249 m3/h	116.510 m3/h
Density	1.974 kg/m3	740.149 kg/m3
System factor	.....	1.000
Valve type : V-1		
Valve material : S.S.		
Valve thickness, gage	.....	12.000
Deck thickness, gage	.....	14.000
Tower internal diameter, m	.....	3.505

VALVE TRAY SIZING

Tray spacing, m	.....		0.610
No. of tray liquid passes	.....		1
Downcomer dimension,	Width m	Length m	Area m2
Side	0.368	2.150	0.540
Avg. weir length m	.....		2.150
Weir height, m	.....		0.051
Flow path length m	.....		2.769
Flow path width m	.....		3.095
Tray area, m2	.....		9.650
Tray active area m2	.....		8.570
% flood	.....		75.528
Hole area m2	.....		1.628
Approx # of valves	.....		1375
Tray press loss, m	.....		0.122
Tray press loss, Pa	.....		886.044
Dry press drop, m	.....		0.068
Downcomer clearance m	.....		0.076
Downcomer head loss m	.....		0.007
Downcomer backup m	.....		0.214
Downcomer residence time, sec	.....		3.570
Actual tray efficiency (O'Connell)	.....		0.636
Actual tray efficiency (Chu)	.....		0.573

Equip. 2 Tray No. 33

Tray Loadings	Vapor		Liquid
	108884.834 kg/h		86092.037 kg/h
	54900.356 m3/h		116.301 m3/h
Density	1.983 kg/m3		740.249 kg/m3
System factor	.....		1.000
Valve type : V-1			
Valve material : S.S.			
Valve thickness, gage	.....		12.000
Deck thickness, gage	.....		14.000
Tower internal diameter, m	.....		3.505
Tray spacing, m	.....		0.610
No. of tray liquid passes	.....		1
Downcomer dimension,	Width m	Length m	Area m2
Side	0.368	2.150	0.540
Avg. weir length m	.....		2.150
Weir height, m	.....		0.051
Flow path length m	.....		2.769
Flow path width m	.....		3.095
Tray area, m2	.....		9.650
Tray active area m2	.....		8.570
% flood	.....		75.207
Hole area m2	.....		1.628
Approx # of valves	.....		1375
Tray press loss, m	.....		0.122
Tray press loss, Pa	.....		882.197
Dry press drop, m	.....		0.067
Downcomer clearance m	.....		0.076
Downcomer head loss m	.....		0.007
Downcomer backup m	.....		0.213
Downcomer residence time, sec	.....		3.566
Actual tray efficiency (O'Connell)	.....		0.636

VALVE TRAY SIZING

Actual tray efficiency (Chu) 0.573

Equip. 2 Tray No. 34

Tray Loadings	Vapor	Liquid
	108736.432 kg/h	85943.642 kg/h
	54572.377 m3/h	116.082 m3/h
Density	1.993 kg/m3	740.369 kg/m3
System factor	.....	1.000
Valve type : V-1		
Valve material : S.S.		
Valve thickness, gage	.....	12.000
Deck thickness, gage	.....	14.000
Tower internal diameter, m	.....	3.505
Tray spacing, m	.....	0.610
No. of tray liquid passes	.....	1
Downcomer dimension,	Width m / Length m	Area m2
Side	0.368 / 2.150	0.540
Avg. weir length m	.....	2.150
Weir height, m	.....	0.051
Flow path length m	.....	2.769
Flow path width m	.....	3.095
Tray area, m2	.....	9.650
Tray active area m2	.....	8.570
% flood	.....	74.887
Hole area m2	.....	1.628
Approx # of valves	.....	1375
Tray press loss, m	.....	0.121
Tray press loss, Pa	.....	878.363
Dry press drop, m	.....	0.067
Downcomer clearance m	.....	0.076
Downcomer head loss m	.....	0.007
Downcomer backup m	.....	0.213
Downcomer residence time, sec	.....	3.562
Actual tray efficiency (O'Connell)	.....	0.635
Actual tray efficiency (Chu)	.....	0.572

Equip. 2 Tray No. 35

Tray Loadings	Vapor	Liquid
	108581.721 kg/h	85788.917 kg/h
	54248.150 m3/h	115.851 m3/h
Density	2.002 kg/m3	740.510 kg/m3
System factor	.....	1.000
Valve type : V-1		
Valve material : S.S.		
Valve thickness, gage	.....	12.000
Deck thickness, gage	.....	14.000
Tower internal diameter, m	.....	3.505
Tray spacing, m	.....	0.610
No. of tray liquid passes	.....	1
Downcomer dimension,	Width m / Length m	Area m2
Side	0.368 / 2.150	0.540
Avg. weir length m	.....	2.150
Weir height, m	.....	0.051
Flow path length m	.....	2.769

VALVE TRAY SIZING

Flow path width m	3.095
Tray area, m2	9.650
Tray active area m2	8.570
% flood	74.565
Hole area m2	1.628
Approx # of valves	1375
Tray press loss, m	0.120
Tray press loss, Pa	874.537
Dry press drop, m	0.066
Downcomer clearance m	0.076
Downcomer head loss m	0.007
Downcomer backup m	0.212
Downcomer residence time, sec	3.559
Actual tray efficiency (O'Connell)	0.635
Actual tray efficiency (Chu)	0.572

Equip. 2 Tray No. 36

Tray Loadings	Vapor	Liquid
	108420.051 kg/h	85627.240 kg/h
	53927.463 m3/h	115.607 m3/h
Density	2.010 kg/m3	740.675 kg/m3
System factor		1.000
Valve type : V-1		
Valve material : S.S.		
Valve thickness, gage		12.000
Deck thickness, gage		14.000
Tower internal diameter, m		3.505
Tray spacing, m		0.610
No. of tray liquid passes		1

Downcomer dimension,	Width m	Length m	Area m2
Side	0.368	2.150	0.540

Avg. weir length m	2.150
Weir height, m	0.051
Flow path length m	2.769
Flow path width m	3.095
Tray area, m2	9.650
Tray active area m2	8.570
% flood	74.243
Hole area m2	1.628
Approx # of valves	1375
Tray press loss, m	0.120
Tray press loss, Pa	870.713
Dry press drop, m	0.066
Downcomer clearance m	0.076
Downcomer head loss m	0.007
Downcomer backup m	0.211
Downcomer residence time, sec	3.556
Actual tray efficiency (O'Connell)	0.634
Actual tray efficiency (Chu)	0.571

Equip. 2 Tray No. 37

Tray Loadings	Vapor	Liquid
	108250.932 kg/h	85458.135 kg/h
	53610.269 m3/h	115.349 m3/h

VALVE TRAY SIZING

Density	2.019 kg/m3	740.868 kg/m3
System factor	.....	1.000
Valve type : V-1		
Valve material : S.S.		
Valve thickness, gage	.....	12.000
Deck thickness, gage	.....	14.000
Tower internal diameter, m	.....	3.353
Tray spacing, m	.....	0.610
No. of tray liquid passes	.....	1
Downcomer dimension,	Width m / Length m	Area m2
Side	0.349 / 2.048	0.488
Avg. weir length m	.....	2.048
Weir height, m	.....	0.051
Flow path length m	.....	2.654
Flow path width m	.....	2.959
Tray area, m2	.....	8.829
Tray active area m2	.....	7.853
% flood	.....	80.218
Hole area m2	.....	1.492
Approx # of valves	.....	1260
Tray press loss, m	.....	0.133
Tray press loss, Pa	.....	965.591
Dry press drop, m	.....	0.078
Downcomer clearance m	.....	0.076
Downcomer head loss m	.....	0.007
Downcomer backup m	.....	0.226
Downcomer residence time, sec	.....	3.444
Actual tray efficiency (O'Connell)	.....	0.633
Actual tray efficiency (Chu)	.....	0.571

Equip. 2 Tray No. 38

Tray Loadings	Vapor	Liquid
	108074.144 kg/h	85281.347 kg/h
	53296.588 m3/h	115.075 m3/h
Density	2.028 kg/m3	741.091 kg/m3
System factor	.....	1.000
Valve type : V-1		
Valve material : S.S.		
Valve thickness, gage	.....	12.000
Deck thickness, gage	.....	14.000
Tower internal diameter, m	.....	3.353
Tray spacing, m	.....	0.610
No. of tray liquid passes	.....	1
Downcomer dimension,	Width m / Length m	Area m2
Side	0.349 / 2.048	0.488
Avg. weir length m	.....	2.048
Weir height, m	.....	0.051
Flow path length m	.....	2.654
Flow path width m	.....	2.959
Tray area, m2	.....	8.829
Tray active area m2	.....	7.853
% flood	.....	79.866
Hole area m2	.....	1.492
Approx # of valves	.....	1260
Tray press loss, m	.....	0.132

VALVE TRAY SIZING

Tray press loss, Pa	961.081
Dry press drop, m	0.077
Downcomer clearance m	0.076
Downcomer head loss m	0.007
Downcomer backup m	0.225
Downcomer residence time, sec	3.441
Actual tray efficiency (O'Connell)	0.633
Actual tray efficiency (Chu)	0.570

Equip. 2 Tray No. 39

Tray Loadings	Vapor	Liquid
	107888.760 kg/h	85095.963 kg/h
	52986.207 m3/h	114.785 m3/h
Density	2.036 kg/m3	741.350 kg/m3
System factor		1.000
Valve type : V-1		
Valve material : S.S.		
Valve thickness, gage		12.000
Deck thickness, gage		14.000
Tower internal diameter, m		3.353
Tray spacing, m		0.610
No. of tray liquid passes		1

Downcomer dimension,	Width m	Length m	Area m2
Side	0.349	2.048	0.488

Avg. weir length m	2.048
Weir height, m	0.051
Flow path length m	2.654
Flow path width m	2.959
Tray area, m2	8.829
Tray active area m2	7.853
% flood	79.511
Hole area m2	1.492
Approx # of valves	1260
Tray press loss, m	0.132
Tray press loss, Pa	956.566
Dry press drop, m	0.077
Downcomer clearance m	0.076
Downcomer head loss m	0.007
Downcomer backup m	0.225
Downcomer residence time, sec	3.438
Actual tray efficiency (O'Connell)	0.632
Actual tray efficiency (Chu)	0.570

Equip. 2 Tray No. 40

Tray Loadings	Vapor	Liquid
	107693.935 kg/h	84901.131 kg/h
	52678.925 m3/h	114.476 m3/h
Density	2.044 kg/m3	741.647 kg/m3
System factor		1.000
Valve type : V-1		
Valve material : S.S.		
Valve thickness, gage		12.000
Deck thickness, gage		14.000
Tower internal diameter, m		3.353

VALVE TRAY SIZING

Tray spacing, m	.....		0.610
No. of tray liquid passes	.....		1
Downcomer dimension,	Width m	Length m	Area m2
Side	0.349	2.048	0.488
Avg. weir length m	.....		2.048
Weir height, m	.....		0.051
Flow path length m	.....		2.654
Flow path width m	.....		2.959
Tray area, m2	.....		8.829
Tray active area m2	.....		7.853
% flood	.....		79.154
Hole area m2	.....		1.492
Approx # of valves	.....		1260
Tray press loss, m	.....		0.131
Tray press loss, Pa	.....		952.040
Dry press drop, m	.....		0.076
Downcomer clearance m	.....		0.076
Downcomer head loss m	.....		0.007
Downcomer backup m	.....		0.224
Downcomer residence time, sec	.....		3.435
Actual tray efficiency (O'Connell)	.....		0.631
Actual tray efficiency (Chu)	.....		0.569

Equip. 2 Tray No. 41

Tray Loadings	Vapor		Liquid
	107489.393 kg/h		84696.582 kg/h
	52374.828 m3/h		114.148 m3/h
Density	2.052 kg/m3		741.989 kg/m3
System factor	.....		1.000
Valve type : V-1			
Valve material : S.S.			
Valve thickness, gage	.....		12.000
Deck thickness, gage	.....		14.000
Tower internal diameter, m	.....		3.353
Tray spacing, m	.....		0.610
No. of tray liquid passes	.....		1
Downcomer dimension,	Width m	Length m	Area m2
Side	0.349	2.048	0.488
Avg. weir length m	.....		2.048
Weir height, m	.....		0.051
Flow path length m	.....		2.654
Flow path width m	.....		2.959
Tray area, m2	.....		8.829
Tray active area m2	.....		7.853
% flood	.....		78.793
Hole area m2	.....		1.492
Approx # of valves	.....		1260
Tray press loss, m	.....		0.130
Tray press loss, Pa	.....		947.503
Dry press drop, m	.....		0.075
Downcomer clearance m	.....		0.076
Downcomer head loss m	.....		0.007
Downcomer backup m	.....		0.223
Downcomer residence time, sec	.....		3.433
Actual tray efficiency (O'Connell)	.....		0.631

VALVE TRAY SIZING

Actual tray efficiency (Chu) 0.568

Equip. 2 Tray No. 42

Tray Loadings	Vapor	Liquid
	107274.007 kg/h	84481.225 kg/h
	52073.688 m3/h	113.798 m3/h
Density	2.060 kg/m3	742.380 kg/m3
System factor	.....	1.000
Valve type : V-1		
Valve material : S.S.		
Valve thickness, gage	.....	12.000
Deck thickness, gage	.....	14.000
Tower internal diameter, m	.....	3.353
Tray spacing, m	.....	0.610
No. of tray liquid passes	.....	1
Downcomer dimension,	Width m / Length m	Area m2
Side	0.349 / 2.048	0.488
Avg. weir length m	.....	2.048
Weir height, m	.....	0.051
Flow path length m	.....	2.654
Flow path width m	.....	2.959
Tray area, m2	.....	8.829
Tray active area m2	.....	7.853
% flood	.....	78.429
Hole area m2	.....	1.492
Approx # of valves	.....	1260
Tray press loss, m	.....	0.130
Tray press loss, Pa	.....	942.948
Dry press drop, m	.....	0.075
Downcomer clearance m	.....	0.076
Downcomer head loss m	.....	0.007
Downcomer backup m	.....	0.222
Downcomer residence time, sec	.....	3.431
Actual tray efficiency (O'Connell)	.....	0.630
Actual tray efficiency (Chu)	.....	0.568

Equip. 2 Tray No. 43

Tray Loadings	Vapor	Liquid
	107046.864 kg/h	84254.088 kg/h
	51775.396 m3/h	113.423 m3/h
Density	2.068 kg/m3	742.828 kg/m3
System factor	.....	1.000
Valve type : V-1		
Valve material : S.S.		
Valve thickness, gage	.....	12.000
Deck thickness, gage	.....	14.000
Tower internal diameter, m	.....	3.353
Tray spacing, m	.....	0.610
No. of tray liquid passes	.....	1
Downcomer dimension,	Width m / Length m	Area m2
Side	0.349 / 2.048	0.488
Avg. weir length m	.....	2.048
Weir height, m	.....	0.051
Flow path length m	.....	2.654

VALVE TRAY SIZING

Flow path width m	2.959
Tray area, m2	8.829
Tray active area m2	7.853
% flood	78.060
Hole area m2	1.492
Approx # of valves	1260
Tray press loss, m	0.129
Tray press loss, Pa	938.369
Dry press drop, m	0.074
Downcomer clearance m	0.076
Downcomer head loss m	0.007
Downcomer backup m	0.221
Downcomer residence time, sec	3.430
Actual tray efficiency (O'Connell)	0.629
Actual tray efficiency (Chu)	0.567

Equip. 2 Tray No. 44

Tray Loadings	Vapor	Liquid
	106806.169 kg/h	84013.387 kg/h
	51479.481 m3/h	113.021 m3/h
Density	2.075 kg/m3	743.341 kg/m3
System factor		1.000

Valve type : V-1
Valve material : S.S.

Valve thickness, gage			12.000
Deck thickness, gage			14.000
Tower internal diameter, m			3.353
Tray spacing, m			0.610
No. of tray liquid passes			1
Downcomer dimension,	Width m	Length m	Area m2
Side	0.349	2.048	0.488
Avg. weir length m			2.048
Weir height, m			0.051
Flow path length m			2.654
Flow path width m			2.959
Tray area, m2			8.829
Tray active area m2			7.853
% flood			77.686
Hole area m2			1.492
Approx # of valves			1260
Tray press loss, m			0.128
Tray press loss, Pa			933.753
Dry press drop, m			0.074
Downcomer clearance m			0.076
Downcomer head loss m			0.007
Downcomer backup m			0.221
Downcomer residence time, sec			3.429
Actual tray efficiency (O'Connell)			0.628
Actual tray efficiency (Chu)			0.566

Equip. 2 Tray No. 45

Tray Loadings	Vapor	Liquid
	106551.980 kg/h	83759.191 kg/h
	51186.457 m3/h	112.591 m3/h

VALVE TRAY SIZING

Density	2.082 kg/m3	743.926 kg/m3
System factor	.....	1.000
Valve type : V-1		
Valve material : S.S.		
Valve thickness, gage	.....	12.000
Deck thickness, gage	.....	14.000
Tower internal diameter, m	.....	3.353
Tray spacing, m	.....	0.610
No. of tray liquid passes	.....	1
Downcomer dimension,	Width m / Length m	Area m2
Side	0.349 / 2.048	0.488
Avg. weir length m	.....	2.048
Weir height, m	.....	0.051
Flow path length m	.....	2.654
Flow path width m	.....	2.959
Tray area, m2	.....	8.829
Tray active area m2	.....	7.853
% flood	.....	77.305
Hole area m2	.....	1.492
Approx # of valves	.....	1260
Tray press loss, m	.....	0.127
Tray press loss, Pa	.....	929.109
Dry press drop, m	.....	0.073
Downcomer clearance m	.....	0.076
Downcomer head loss m	.....	0.007
Downcomer backup m	.....	0.220
Downcomer residence time, sec	.....	3.428
Actual tray efficiency (O'Connell)	.....	0.627
Actual tray efficiency (Chu)	.....	0.565

Equip. 2 Tray No. 46

Tray Loadings	Vapor	Liquid
	106281.597 kg/h	83488.814 kg/h
	50895.611 m3/h	112.127 m3/h
Density	2.088 kg/m3	744.595 kg/m3
System factor	.....	1.000
Valve type : V-1		
Valve material : S.S.		
Valve thickness, gage	.....	12.000
Deck thickness, gage	.....	14.000
Tower internal diameter, m	.....	3.353
Tray spacing, m	.....	0.610
No. of tray liquid passes	.....	1
Downcomer dimension,	Width m / Length m	Area m2
Side	0.349 / 2.048	0.488
Avg. weir length m	.....	2.048
Weir height, m	.....	0.051
Flow path length m	.....	2.654
Flow path width m	.....	2.959
Tray area, m2	.....	8.829
Tray active area m2	.....	7.853
% flood	.....	76.917
Hole area m2	.....	1.492
Approx # of valves	.....	1260
Tray press loss, m	.....	0.127

VALVE TRAY SIZING

Tray press loss, Pa	924.415
Dry press drop, m	0.072
Downcomer clearance m	0.076
Downcomer head loss m	0.007
Downcomer backup m	0.219
Downcomer residence time, sec	3.428
Actual tray efficiency (O'Connell)	0.626
Actual tray efficiency (Chu)	0.564

Equip. 2 Tray No. 47

Tray Loadings	Vapor	Liquid
	105994.026 kg/h	83201.258 kg/h
	50607.165 m3/h	111.626 m3/h
Density	2.094 kg/m3	745.359 kg/m3
System factor		1.000
Valve type : V-1		
Valve material : S.S.		
Valve thickness, gage		12.000
Deck thickness, gage		14.000
Tower internal diameter, m		3.353
Tray spacing, m		0.610
No. of tray liquid passes		1
Downcomer dimension, Side	Width m 0.349 / Length m 2.048	Area m2 0.488
Avg. weir length m		2.048
Weir height, m		0.051
Flow path length m		2.654
Flow path width m		2.959
Tray area, m2		8.829
Tray active area m2		7.853
% flood		76.520
Hole area m2		1.492
Approx # of valves		1260
Tray press loss, m		0.126
Tray press loss, Pa		919.671
Dry press drop, m		0.072
Downcomer clearance m		0.076
Downcomer head loss m		0.007
Downcomer backup m		0.218
Downcomer residence time, sec		3.428
Actual tray efficiency (O'Connell)		0.625
Actual tray efficiency (Chu)		0.563

Equip. 2 Tray No. 48

Tray Loadings	Vapor	Liquid
	105686.583 kg/h	82893.814 kg/h
	50320.704 m3/h	111.083 m3/h
Density	2.100 kg/m3	746.232 kg/m3
System factor		1.000
Valve type : V-1		
Valve material : S.S.		
Valve thickness, gage		12.000
Deck thickness, gage		14.000
Tower internal diameter, m		3.353

VALVE TRAY SIZING

Tray spacing, m	.....		0.610
No. of tray liquid passes	.....		1
Downcomer dimension,	Width m	Length m	Area m2
Side	0.349	2.048	0.488
Avg. weir length m	.....		2.048
Weir height, m	.....		0.051
Flow path length m	.....		2.654
Flow path width m	.....		2.959
Tray area, m2	.....		8.829
Tray active area m2	.....		7.853
% flood	.....		76.113
Hole area m2	.....		1.492
Approx # of valves	.....		1260
Tray press loss, m	.....		0.125
Tray press loss, Pa	.....		914.858
Dry press drop, m	.....		0.071
Downcomer clearance m	.....		0.076
Downcomer head loss m	.....		0.007
Downcomer backup m	.....		0.217
Downcomer residence time, sec	.....		3.430
Actual tray efficiency (O'Connell)	.....		0.624
Actual tray efficiency (Chu)	.....		0.562

Equip. 2 Tray No. 49

Tray Loadings	Vapor	Liquid
	105355.304 kg/h	82562.536 kg/h
	50035.412 m3/h	110.491 m3/h
Density	2.106 kg/m3	747.231 kg/m3
System factor	.....	1.000
Valve type : V-1		
Valve material : S.S.		
Valve thickness, gage	.....	12.000
Deck thickness, gage	.....	14.000
Tower internal diameter, m	.....	3.353
Tray spacing, m	.....	0.610
No. of tray liquid passes	.....	1
Downcomer dimension,	Width m / Length m	Area m2
Side	0.349 / 2.048	0.488
Avg. weir length m	.....	2.048
Weir height, m	.....	0.051
Flow path length m	.....	2.654
Flow path width m	.....	2.959
Tray area, m2	.....	8.829
Tray active area m2	.....	7.853
% flood	.....	75.693
Hole area m2	.....	1.492
Approx # of valves	.....	1260
Tray press loss, m	.....	0.124
Tray press loss, Pa	.....	909.949
Dry press drop, m	.....	0.070
Downcomer clearance m	.....	0.076
Downcomer head loss m	.....	0.007
Downcomer backup m	.....	0.216
Downcomer residence time, sec	.....	3.432
Actual tray efficiency (O'Connell)	.....	0.623

VALVE TRAY SIZING

Actual tray efficiency (Chu) 0.561

Equip. 2 Tray No. 50

Tray Loadings	Vapor	Liquid
	105000.390 kg/h	82207.614 kg/h
	49752.759 m3/h	109.848 m3/h
Density	2.110 kg/m3	748.377 kg/m3
System factor	.....	1.000
Valve type : V-1		
Valve material : S.S.		
Valve thickness, gage	.....	12.000
Deck thickness, gage	.....	14.000
Tower internal diameter, m	.....	3.353
Tray spacing, m	.....	0.610
No. of tray liquid passes	.....	1
Downcomer dimension,	Width m / Length m	Area m2
Side	0.349 / 2.048	0.488
Avg. weir length m	.....	2.048
Weir height, m	.....	0.051
Flow path length m	.....	2.654
Flow path width m	.....	2.959
Tray area, m2	.....	8.829
Tray active area m2	.....	7.853
% flood	.....	75.259
Hole area m2	.....	1.492
Approx # of valves	.....	1260
Tray press loss, m	.....	0.123
Tray press loss, Pa	.....	904.967
Dry press drop, m	.....	0.069
Downcomer clearance m	.....	0.076
Downcomer head loss m	.....	0.007
Downcomer backup m	.....	0.215
Downcomer residence time, sec	.....	3.434
Actual tray efficiency (O'Connell)	.....	0.621
Actual tray efficiency (Chu)	.....	0.560

Equip. 2 Tray No. 51

Tray Loadings	Vapor	Liquid
	104614.673 kg/h	81821.905 kg/h
	49471.041 m3/h	109.140 m3/h
Density	2.115 kg/m3	749.695 kg/m3
System factor	.....	1.000
Valve type : V-1		
Valve material : S.S.		
Valve thickness, gage	.....	12.000
Deck thickness, gage	.....	14.000
Tower internal diameter, m	.....	3.353
Tray spacing, m	.....	0.610
No. of tray liquid passes	.....	1
Downcomer dimension,	Width m / Length m	Area m2
Side	0.349 / 2.048	0.488
Avg. weir length m	.....	2.048
Weir height, m	.....	0.051
Flow path length m	.....	2.654

VALVE TRAY SIZING

Flow path width m	2.959
Tray area, m2	8.829
Tray active area m2	7.853
% flood	74.809
Hole area m2	1.492
Approx # of valves	1260
Tray press loss, m	0.122
Tray press loss, Pa	899.855
Dry press drop, m	0.069
Downcomer clearance m	0.076
Downcomer head loss m	0.007
Downcomer backup m	0.214
Downcomer residence time, sec	3.438
Actual tray efficiency (O'Connell)	0.620
Actual tray efficiency (Chu)	0.558

Equip. 2 Tray No. 52

Tray Loadings	Vapor	Liquid
	104192.953 kg/h	81400.177 kg/h
	49190.034 m3/h	108.358 m3/h
Density	2.118 kg/m3	751.216 kg/m3
System factor		1.000
Valve type : V-1		
Valve material : S.S.		
Valve thickness, gage		12.000
Deck thickness, gage		14.000
Tower internal diameter, m		3.353
Tray spacing, m		0.610
No. of tray liquid passes		1
Downcomer dimension,	Width m / Length m	Area m2
Side	0.349 / 2.048	0.488
Avg. weir length m		2.048
Weir height, m		0.051
Flow path length m		2.654
Flow path width m		2.959
Tray area, m2		8.829
Tray active area m2		7.853
% flood		74.337
Hole area m2		1.492
Approx # of valves		1260
Tray press loss, m		0.121
Tray press loss, Pa		894.587
Dry press drop, m		0.068
Downcomer clearance m		0.076
Downcomer head loss m		0.007
Downcomer backup m		0.212
Downcomer residence time, sec		3.443
Actual tray efficiency (O'Connell)		0.618
Actual tray efficiency (Chu)		0.557

Equip. 2 Tray No. 53

Tray Loadings	Vapor	Liquid
	103729.459 kg/h	80936.691 kg/h
	48909.928 m3/h	107.488 m3/h

VALVE TRAY SIZING

Density	2.121 kg/m3	752.980 kg/m3
System factor	.....	1.000
Valve type : V-1		
Valve material : S.S.		
Valve thickness, gage	.....	12.000
Deck thickness, gage	.....	14.000
Tower internal diameter, m	.....	3.353
Tray spacing, m	.....	0.610
No. of tray liquid passes	.....	1
Downcomer dimension,	Width m / Length m	Area m2
Side	0.349 / 2.048	0.488
Avg. weir length m	.....	2.048
Weir height, m	.....	0.051
Flow path length m	.....	2.654
Flow path width m	.....	2.959
Tray area, m2	.....	8.829
Tray active area m2	.....	7.853
% flood	.....	73.840
Hole area m2	.....	1.492
Approx # of valves	.....	1260
Tray press loss, m	.....	0.120
Tray press loss, Pa	.....	889.140
Dry press drop, m	.....	0.067
Downcomer clearance m	.....	0.076
Downcomer head loss m	.....	0.007
Downcomer backup m	.....	0.211
Downcomer residence time, sec	.....	3.450
Actual tray efficiency (O'Connell)	.....	0.616
Actual tray efficiency (Chu)	.....	0.555

Equip. 2 Tray No. 54

Tray Loadings	Vapor	Liquid
	103215.341 kg/h	80422.579 kg/h
	48630.427 m3/h	106.515 m3/h
Density	2.122 kg/m3	755.039 kg/m3
System factor	.....	1.000
Valve type : V-1		
Valve material : S.S.		
Valve thickness, gage	.....	12.000
Deck thickness, gage	.....	14.000
Tower internal diameter, m	.....	3.200
Tray spacing, m	.....	0.610
No. of tray liquid passes	.....	1
Downcomer dimension,	Width m / Length m	Area m2
Side	0.330 / 1.947	0.438
Avg. weir length m	.....	1.947
Weir height, m	.....	0.051
Flow path length m	.....	2.540
Flow path width m	.....	2.822
Tray area, m2	.....	8.045
Tray active area m2	.....	7.168
% flood	.....	79.875
Hole area m2	.....	1.362
Approx # of valves	.....	1150
Tray press loss, m	.....	0.134

VALVE TRAY SIZING

Tray press loss, Pa	989.963
Dry press drop, m	0.079
Downcomer clearance m	0.076
Downcomer head loss m	0.007
Downcomer backup m	0.226
Downcomer residence time, sec	3.347
Actual tray efficiency (O'Connell)	0.614
Actual tray efficiency (Chu)	0.553

Equip. 2 Tray No. 55

Tray Loadings	Vapor	Liquid
	102637.918 kg/h	79845.156 kg/h
	48350.851 m3/h	105.412 m3/h
Density	2.123 kg/m3	757.457 kg/m3
System factor		1.000
Valve type : V-1		
Valve material : S.S.		
Valve thickness, gage		12.000
Deck thickness, gage		14.000
Tower internal diameter, m		3.200
Tray spacing, m		0.610
No. of tray liquid passes		1
Downcomer dimension,	Width m / Length m	Area m2
Side	0.330 / 1.947	0.438
Avg. weir length m		1.947
Weir height, m		0.051
Flow path length m		2.540
Flow path width m		2.822
Tray area, m2		8.045
Tray active area m2		7.168
% flood		79.288
Hole area m2		1.362
Approx # of valves		1150
Tray press loss, m		0.132
Tray press loss, Pa		982.857
Dry press drop, m		0.078
Downcomer clearance m		0.076
Downcomer head loss m		0.007
Downcomer backup m		0.224
Downcomer residence time, sec		3.356
Actual tray efficiency (O'Connell)		0.612
Actual tray efficiency (Chu)		0.551

Equip. 2 Tray No. 56

Tray Loadings	Vapor	Liquid
	101980.435 kg/h	79187.667 kg/h
	48070.722 m3/h	104.150 m3/h
Density	2.121 kg/m3	760.325 kg/m3
System factor		1.000
Valve type : V-1		
Valve material : S.S.		
Valve thickness, gage		12.000
Deck thickness, gage		14.000
Tower internal diameter, m		3.200

VALVE TRAY SIZING

Tray spacing, m	.....		0.610
No. of tray liquid passes	.....		1
Downcomer dimension,	Width m	Length m	Area m2
Side	0.330	1.947	0.438
Avg. weir length m	.....		1.947
Weir height, m	.....		0.051
Flow path length m	.....		2.540
Flow path width m	.....		2.822
Tray area, m2	.....		8.045
Tray active area m2	.....		7.168
% flood	.....		78.663
Hole area m2	.....		1.362
Approx # of valves	.....		1150
Tray press loss, m	.....		0.131
Tray press loss, Pa	.....		975.295
Dry press drop, m	.....		0.077
Downcomer clearance m	.....		0.076
Downcomer head loss m	.....		0.007
Downcomer backup m	.....		0.222
Downcomer residence time, sec	.....		3.367
Actual tray efficiency (O'Connell)	.....		0.609
Actual tray efficiency (Chu)	.....		0.548

Equip. 2 Tray No. 57

Tray Loadings	Vapor		Liquid
	101217.996 kg/h		78425.221 kg/h
	47789.085 m3/h		102.682 m3/h
Density	2.118 kg/m3		763.766 kg/m3
System factor	.....		1.000
Valve type : V-1			
Valve material : S.S.			
Valve thickness, gage	.....		12.000
Deck thickness, gage	.....		14.000
Tower internal diameter, m	.....		3.200
Tray spacing, m	.....		0.610
No. of tray liquid passes	.....		1
Downcomer dimension,	Width m	Length m	Area m2
Side	0.330	1.947	0.438
Avg. weir length m	.....		1.947
Weir height, m	.....		0.051
Flow path length m	.....		2.540
Flow path width m	.....		2.822
Tray area, m2	.....		8.045
Tray active area m2	.....		7.168
% flood	.....		77.983
Hole area m2	.....		1.362
Approx # of valves	.....		1150
Tray press loss, m	.....		0.129
Tray press loss, Pa	.....		967.118
Dry press drop, m	.....		0.076
Downcomer clearance m	.....		0.076
Downcomer head loss m	.....		0.007
Downcomer backup m	.....		0.220
Downcomer residence time, sec	.....		3.381
Actual tray efficiency (O'Connell)	.....		0.605

VALVE TRAY SIZING

Actual tray efficiency (Chu) 0.545

Equip. 2 Tray No. 58

Tray Loadings	Vapor	Liquid
	100309.819 kg/h	77517.058 kg/h
	47502.823 m3/h	100.940 m3/h
Density	2.112 kg/m3	767.953 kg/m3
System factor	.....	1.000
Valve type : V-1		
Valve material : S.S.		
Valve thickness, gage	.....	12.000
Deck thickness, gage	.....	14.000
Tower internal diameter, m	.....	3.200
Tray spacing, m	.....	0.610
No. of tray liquid passes	.....	1
Downcomer dimension,	Width m / Length m	Area m2
Side	0.330 / 1.947	0.438
Avg. weir length m	.....	1.947
Weir height, m	.....	0.051
Flow path length m	.....	2.540
Flow path width m	.....	2.822
Tray area, m2	.....	8.045
Tray active area m2	.....	7.168
% flood	.....	77.226
Hole area m2	.....	1.362
Approx # of valves	.....	1150
Tray press loss, m	.....	0.127
Tray press loss, Pa	.....	958.035
Dry press drop, m	.....	0.074
Downcomer clearance m	.....	0.076
Downcomer head loss m	.....	0.006
Downcomer backup m	.....	0.218
Downcomer residence time, sec	.....	3.400
Actual tray efficiency (O'Connell)	.....	0.601
Actual tray efficiency (Chu)	.....	0.541

Equip. 2 Tray No. 59

Tray Loadings	Vapor	Liquid
	99211.651 kg/h	76418.882 kg/h
	47216.541 m3/h	98.843 m3/h
Density	2.101 kg/m3	773.136 kg/m3
System factor	.....	1.000
Valve type : V-1		
Valve material : S.S.		
Valve thickness, gage	.....	12.000
Deck thickness, gage	.....	14.000
Tower internal diameter, m	.....	3.200
Tray spacing, m	.....	0.610
No. of tray liquid passes	.....	1
Downcomer dimension,	Width m / Length m	Area m2
Side	0.330 / 1.947	0.438
Avg. weir length m	.....	1.947
Weir height, m	.....	0.051
Flow path length m	.....	2.540

VALVE TRAY SIZING

Flow path width m	2.822
Tray area, m2	8.045
Tray active area m2	7.168
% flood	76.375
Hole area m2	1.362
Approx # of valves	1150
Tray press loss, m	0.125
Tray press loss, Pa	947.843
Dry press drop, m	0.072
Downcomer clearance m	0.076
Downcomer head loss m	0.006
Downcomer backup m	0.215
Downcomer residence time, sec	3.426
Actual tray efficiency (O'Connell)	0.595
Actual tray efficiency (Chu)	0.535

Equip. 2 Tray No. 60

Tray Loadings	Vapor	Liquid
	97829.392 kg/h	75036.623 kg/h
	46928.259 m3/h	96.238 m3/h
Density	2.085 kg/m3	779.698 kg/m3
System factor		1.000
Valve type : V-1		
Valve material : S.S.		
Valve thickness, gage		12.000
Deck thickness, gage		14.000
Tower internal diameter, m		3.200
Tray spacing, m		0.610
No. of tray liquid passes		1

Downcomer dimension,	Width m	Length m	Area m2
Side	0.330	1.947	0.438

Avg. weir length m	1.947
Weir height, m	0.051
Flow path length m	2.540
Flow path width m	2.822
Tray area, m2	8.045
Tray active area m2	7.168
% flood	75.388
Hole area m2	1.362
Approx # of valves	1150
Tray press loss, m	0.122
Tray press loss, Pa	935.922
Dry press drop, m	0.070
Downcomer clearance m	0.076
Downcomer head loss m	0.006
Downcomer backup m	0.211
Downcomer residence time, sec	3.461
Actual tray efficiency (O'Connell)	0.588
Actual tray efficiency (Chu)	0.529

Equip. 2 Tray No. 61

Tray Loadings	Vapor	Liquid
	96002.896 kg/h	73210.135 kg/h
	46635.858 m3/h	92.878 m3/h

VALVE TRAY SIZING

Density	2.059 kg/m3	788.244 kg/m3
System factor	.....	1.000
Valve type : V-1		
Valve material : S.S.		
Valve thickness, gage	.....	12.000
Deck thickness, gage	.....	14.000
Tower internal diameter, m	.....	3.200
Tray spacing, m	.....	0.610
No. of tray liquid passes	.....	1
Downcomer dimension,	Width m / Length m	Area m2
Side	0.330 / 1.947	0.438
Avg. weir length m	.....	1.947
Weir height, m	.....	0.051
Flow path length m	.....	2.540
Flow path width m	.....	2.822
Tray area, m2	.....	8.045
Tray active area m2	.....	7.168
% flood	.....	74.196
Hole area m2	.....	1.362
Approx # of valves	.....	1150
Tray press loss, m	.....	0.119
Tray press loss, Pa	.....	921.210
Dry press drop, m	.....	0.068
Downcomer clearance m	.....	0.076
Downcomer head loss m	.....	0.005
Downcomer backup m	.....	0.207
Downcomer residence time, sec	.....	3.512
Actual tray efficiency (O'Connell)	.....	0.578
Actual tray efficiency (Chu)	.....	0.519

Equip. 2 Tray No. 62

Tray Loadings	Vapor	Liquid
	91204.541 kg/h	100865.165 kg/h
	44858.189 m3/h	126.546 m3/h
Density	2.033 kg/m3	797.064 kg/m3
System factor	.....	1.000
Valve type : V-1		
Valve material : S.S.		
Valve thickness, gage	.....	12.000
Deck thickness, gage	.....	14.000
Tower internal diameter, m	.....	3.200
Tray spacing, m	.....	0.610
No. of tray liquid passes	.....	1
Downcomer dimension,	Width m / Length m	Area m2
Side	0.387 / 2.088	0.554
Avg. weir length m	.....	2.088
Weir height, m	.....	0.051
Flow path length m	.....	2.426
Flow path width m	.....	2.860
Tray area, m2	.....	8.045
Tray active area m2	.....	6.937
% flood	.....	75.686
Hole area m2	.....	1.318
Approx # of valves	.....	1113
Tray press loss, m	.....	0.122

VALVE TRAY SIZING

Tray press loss, Pa	954.850
Dry press drop, m	0.065
Downcomer clearance m	0.076
Downcomer head loss m	0.009
Downcomer backup m	0.218
Downcomer residence time, sec	3.439
Actual tray efficiency (O'Connell)	0.559
Actual tray efficiency (Chu)	0.567

Equip. 2 Tray No. 63

Tray Loadings	Vapor	Liquid
	88236.913 kg/h	97897.523 kg/h
	44520.434 m3/h	120.493 m3/h
Density	1.982 kg/m3	812.475 kg/m3
System factor		1.000
Valve type : V-1		
Valve material : S.S.		
Valve thickness, gage		12.000
Deck thickness, gage		14.000
Tower internal diameter, m		3.048
Tray spacing, m		0.610
No. of tray liquid passes		1

Downcomer dimension,	Width m	Length m	Area m2
Side	0.368	1.987	0.501

Avg. weir length m	1.987
Weir height, m	0.051
Flow path length m	2.311
Flow path width m	2.723
Tray area, m2	7.297
Tray active area m2	6.295
% flood	80.473
Hole area m2	1.196
Approx # of valves	1010
Tray press loss, m	0.132
Tray press loss, Pa	1048.541
Dry press drop, m	0.075
Downcomer clearance m	0.076
Downcomer head loss m	0.009
Downcomer backup m	0.228
Downcomer residence time, sec	3.410
Actual tray efficiency (O'Connell)	0.544
Actual tray efficiency (Chu)	0.552

Equip. 2 Tray No. 64

Tray Loadings	Vapor	Liquid
	83230.855 kg/h	92891.479 kg/h
	44188.127 m3/h	110.695 m3/h
Density	1.884 kg/m3	839.165 kg/m3
System factor		1.000
Valve type : V-1		
Valve material : S.S.		
Valve thickness, gage		12.000
Deck thickness, gage		14.000
Tower internal diameter, m		3.048

VALVE TRAY SIZING

Tray spacing, m	.....		0.610
No. of tray liquid passes	.....		1
Downcomer dimension,	Width m	Length m	Area m2
Side	0.368	1.987	0.501
Avg. weir length m	.....		1.987
Weir height, m	.....		0.051
Flow path length m	.....		2.311
Flow path width m	.....		2.723
Tray area, m2	.....		7.297
Tray active area m2	.....		6.295
% flood	.....		76.865
Hole area m2	.....		1.196
Approx # of valves	.....		1010
Tray press loss, m	.....		0.123
Tray press loss, Pa	.....		1008.871
Dry press drop, m	.....		0.068
Downcomer clearance m	.....		0.076
Downcomer head loss m	.....		0.007
Downcomer backup m	.....		0.215
Downcomer residence time, sec	.....		3.510
Actual tray efficiency (O'Connell)	.....		0.516
Actual tray efficiency (Chu)	.....		0.524

Equip. 2 Tray No. 65

Tray Loadings	Vapor	Liquid
	75420.618 kg/h	85081.242 kg/h
	44062.235 m3/h	96.042 m3/h
Density	1.712 kg/m3	885.876 kg/m3
System factor	.....	1.000
Valve type : V-1		
Valve material : S.S.		
Valve thickness, gage	.....	12.000
Deck thickness, gage	.....	14.000
Tower internal diameter, m	.....	2.896
Tray spacing, m	.....	0.610
No. of tray liquid passes	.....	1
Downcomer dimension,	Width m / Length m	Area m2
Side	0.330 / 1.841	0.415
Avg. weir length m	.....	1.841
Weir height, m	.....	0.051
Flow path length m	.....	2.235
Flow path width m	.....	2.574
Tray area, m2	.....	6.585
Tray active area m2	.....	5.754
% flood	.....	77.983
Hole area m2	.....	1.093
Approx # of valves	.....	923
Tray press loss, m	.....	0.123
Tray press loss, Pa	.....	1066.524
Dry press drop, m	.....	0.070
Downcomer clearance m	.....	0.076
Downcomer head loss m	.....	0.006
Downcomer backup m	.....	0.213
Downcomer residence time, sec	.....	3.320
Actual tray efficiency (O'Connell)	.....	0.469

VALVE TRAY SIZING

Actual tray efficiency (Chu) 0.475

Equip. 2 Tray No. 66

Tray Loadings	Vapor	Liquid
	67919.199 kg/h	77579.824 kg/h
	44420.773 m3/h	82.329 m3/h
Density	1.529 kg/m3	942.316 kg/m3
System factor	.....	1.000
Valve type : V-1		
Valve material : S.S.		
Valve thickness, gage	.....	12.000
Deck thickness, gage	.....	14.000
Tower internal diameter, m	.....	2.743
Tray spacing, m	.....	0.610
No. of tray liquid passes	.....	1
Downcomer dimension,	Width m / Length m	Area m2
Side	0.311 / 1.740	0.370
Avg. weir length m	.....	1.740
Weir height, m	.....	0.051
Flow path length m	.....	2.121
Flow path width m	.....	2.438
Tray area, m2	.....	5.910
Tray active area m2	.....	5.170
% flood	.....	80.415
Hole area m2	.....	0.982
Approx # of valves	.....	830
Tray press loss, m	.....	0.125
Tray press loss, Pa	.....	1152.016
Dry press drop, m	.....	0.073
Downcomer clearance m	.....	0.076
Downcomer head loss m	.....	0.005
Downcomer backup m	.....	0.212
Downcomer residence time, sec	.....	3.427
Actual tray efficiency (O'Connell)	.....	0.416
Actual tray efficiency (Chu)	.....	0.421

Equip. 2 Tray No. 67

Tray Loadings	Vapor	Liquid
	63979.764 kg/h	73640.381 kg/h
	44944.361 m3/h	75.926 m3/h
Density	1.424 kg/m3	969.891 kg/m3
System factor	.....	1.000
Valve type : V-1		
Valve material : S.S.		
Valve thickness, gage	.....	12.000
Deck thickness, gage	.....	14.000
Tower internal diameter, m	.....	2.743
Tray spacing, m	.....	0.610
No. of tray liquid passes	.....	1
Downcomer dimension,	Width m / Length m	Area m2
Side	0.292 / 1.692	0.337
Avg. weir length m	.....	1.692
Weir height, m	.....	0.051
Flow path length m	.....	2.159

VALVE TRAY SIZING

Flow path width m	2.425
Tray area, m2	5.910
Tray active area m2	5.236
% flood	77.545
Hole area m2	0.995
Approx # of valves	840
Tray press loss, m	0.116
Tray press loss, Pa	1107.699
Dry press drop, m	0.066
Downcomer clearance m	0.076
Downcomer head loss m	0.005
Downcomer backup m	0.202
Downcomer residence time, sec	3.230
Actual tray efficiency (O'Connell)	0.391
Actual tray efficiency (Chu)	0.395

Equip. 2 Tray No. 68

Tray Loadings	Vapor	Liquid
	60305.531 kg/h	69966.134 kg/h
	45174.579 m3/h	71.874 m3/h
Density	1.335 kg/m3	973.461 kg/m3
System factor		1.000
Valve type : V-1		
Valve material : S.S.		
Valve thickness, gage		12.000
Deck thickness, gage		14.000
Tower internal diameter, m		2.743
Tray spacing, m		0.610
No. of tray liquid passes		1

Downcomer dimension, Side	Width m	Length m	Area m2
	0.292	1.692	0.337

Avg. weir length m	1.692
Weir height, m	0.051
Flow path length m	2.159
Flow path width m	2.425
Tray area, m2	5.910
Tray active area m2	5.236
% flood	76.147
Hole area m2	0.995
Approx # of valves	840
Tray press loss, m	0.112
Tray press loss, Pa	1066.043
Dry press drop, m	0.063
Downcomer clearance m	0.076
Downcomer head loss m	0.004
Downcomer backup m	0.196
Downcomer residence time, sec	3.304
Actual tray efficiency (O'Connell)	0.382
Actual tray efficiency (Chu)	0.386

Equip. 2 Tray No. 69

Tray Loadings	Vapor	Liquid
	55104.003 kg/h	64764.613 kg/h
	45344.750 m3/h	66.968 m3/h

VALVE TRAY SIZING

Density	1.215 kg/m3	967.099 kg/m3
System factor	.....	1.000
Valve type : V-1		
Valve material : S.S.		
Valve thickness, gage	.....	12.000
Deck thickness, gage	.....	14.000
Tower internal diameter, m	.....	2.743
Tray spacing, m	.....	0.610
No. of tray liquid passes	.....	1
Downcomer dimension,	Width m / Length m	Area m2
Side	0.273 / 1.643	0.306
Avg. weir length m	.....	1.643
Weir height, m	.....	0.051
Flow path length m	.....	2.197
Flow path width m	.....	2.412
Tray area, m2	.....	5.910
Tray active area m2	.....	5.299
% flood	.....	74.316
Hole area m2	.....	1.007
Approx # of valves	.....	850
Tray press loss, m	.....	0.105
Tray press loss, Pa	.....	993.076
Dry press drop, m	.....	0.056
Downcomer clearance m	.....	0.076
Downcomer head loss m	.....	0.004
Downcomer backup m	.....	0.188
Downcomer residence time, sec	.....	3.079
Actual tray efficiency (O'Connell)	.....	0.377
Actual tray efficiency (Chu)	.....	0.380

HEATING CURVES SUMMARY

Eqp # 1 Unit type : SCDS Unit name: AS-601

Condenser

NP	Temp C	Pres Pa	Del H kW	Vapor kg/h	Liquid kg/h	Vap mole frac.	Vap mass frac.
1	124.3	419000.0	3.26E+004	97360	0	1.0000	1.0000
2	124.2	418631.6	2.19E+004	71344	26016	0.6771	0.7328
3	124.0	418263.2	2.14E+004	69663	27697	0.6591	0.7155
4	123.8	417894.7	2.07E+004	67862	29498	0.6401	0.6970
5	123.7	417526.3	2.01E+004	65926	31434	0.6199	0.6771
6	123.5	417157.9	1.94E+004	63838	33522	0.5983	0.6557
7	123.3	416789.5	1.86E+004	61579	35781	0.5753	0.6325
8	123.2	416421.1	1.78E+004	59127	38234	0.5506	0.6073
9	123.0	416052.6	1.69E+004	56456	40904	0.5240	0.5799
10	122.8	415684.2	1.60E+004	53538	43822	0.4953	0.5499
11	122.6	415315.8	1.50E+004	50336	47024	0.4641	0.5170
12	122.5	414947.3	1.39E+004	46820	50541	0.4302	0.4809
13	122.3	414578.9	1.27E+004	42941	54419	0.3932	0.4411
14	122.1	414210.5	1.13E+004	38643	58717	0.3526	0.3969
15	122.0	413842.1	9.90E+003	33876	63484	0.3080	0.3479
16	121.8	413473.7	8.31E+003	28561	68799	0.2587	0.2934
17	121.6	413105.2	6.55E+003	22620	74740	0.2041	0.2323
18	121.5	412736.8	4.60E+003	15957	81404	0.1434	0.1639
19	121.3	412368.4	2.43E+003	8460	88900	0.0757	0.0869
20	121.1	412000.0	1.73	6	97354	0.0001	0.0001

Reboiler

NP	Temp C	Pres Pa	Del H kW	Vapor kg/h	Liquid kg/h	Vap mole frac.	Vap mass frac.	
1	148.9	461939.4	0.000	0	516955	0.0000	0.0000	Bub
2	148.9	462000.5	2.51E+003	4313	512643	0.0084	0.0083	
3	148.9	462061.6	5.01E+003	8622	508334	0.0167	0.0167	
4	148.9	462122.7	7.52E+003	12928	504028	0.0251	0.0250	
5	149.0	462183.8	1.00E+004	17231	499725	0.0334	0.0333	
6	149.0	462244.9	1.25E+004	21530	495425	0.0418	0.0416	
7	149.0	462305.9	1.50E+004	25827	491128	0.0501	0.0500	
8	149.0	462367.0	1.75E+004	30095	486860	0.0584	0.0582	
9	149.0	462428.1	2.00E+004	34414	482542	0.0668	0.0666	
10	149.0	462489.2	2.25E+004	38704	478251	0.0752	0.0749	
11	149.0	462550.3	2.51E+004	42992	473963	0.0836	0.0832	
12	149.0	462611.3	2.76E+004	47278	469677	0.0919	0.0915	
13	149.0	462672.4	3.01E+004	51551	465404	0.1003	0.0997	
14	149.0	462733.5	3.26E+004	55846	461110	0.1086	0.1080	
15	149.1	462794.6	3.51E+004	60127	456828	0.1170	0.1163	
16	149.1	462855.6	3.76E+004	64407	452549	0.1254	0.1246	
17	149.1	462916.8	4.01E+004	68686	448269	0.1337	0.1329	
18	149.1	462977.8	4.26E+004	72963	443992	0.1421	0.1411	
19	149.1	463038.9	4.51E+004	77239	439717	0.1504	0.1494	
20	149.1	463100.0	4.76E+004	81512	435444	0.1588	0.1577	

HEATING CURVES SUMMARY

Eqp # 2 Unit type : SCDS Unit name: AS-602

Condenser

NP	Temp C	Pres Pa	Del H kW	Vapor kg/h	Liquid kg/h	Vap mole frac.	Vap mass frac.
1	80.9	112000.0	2.89E+004	111721	0	1.0000	1.0000
2	80.8	111631.6	1.39E+004	53494	58227	0.4781	0.4788
3	80.7	111263.2	1.01E+004	38730	72990	0.3461	0.3467
4	80.6	110894.7	6.98E+003	26626	85095	0.2378	0.2383
5	80.5	110526.3	4.49E+003	16989	94732	0.1517	0.1521
6	80.4	110157.9	2.47E+003	9152	102568	0.0817	0.0819
7	80.4	109789.5	864.	2937	108784	0.0262	0.0263
8	80.3	109421.1	101.	0	111721	0.0000	0.0000
9	80.2	109052.6	92.4	0	111721	0.0000	0.0000
10	80.1	108684.2	84.0	0	111721	0.0000	0.0000
11	80.0	108315.8	75.6	0	111721	0.0000	0.0000
12	79.9	107947.4	67.2	0	111721	0.0000	0.0000
13	79.8	107578.9	58.7	0	111721	0.0000	0.0000
14	79.7	107210.5	50.4	0	111721	0.0000	0.0000
15	79.7	106842.1	42.0	0	111721	0.0000	0.0000
16	79.6	106473.7	33.6	0	111721	0.0000	0.0000
17	79.5	106105.3	25.2	0	111721	0.0000	0.0000
18	79.4	105736.8	16.8	0	111721	0.0000	0.0000
19	79.3	105368.4	8.40	0	111721	0.0000	0.0000
20	79.2	105000.0	0.01876	0	111721	0.0000	0.0000

Reboiler

NP	Temp C	Pres Pa	Del H kW	Vapor kg/h	Liquid kg/h	Vap mole frac.	Vap mass frac.
1	113.5	174073.5	0.000	0	64765	0.0000	0.0000
2	113.6	174122.3	1.01E+003	2291	62474	0.0298	0.0354
3	113.7	174171.1	2.25E+003	5058	59707	0.0662	0.0781
4	113.7	174219.8	3.64E+003	8117	56648	0.1069	0.1253
5	113.8	174268.6	5.08E+003	11269	53495	0.1495	0.1740
6	113.9	174317.3	6.54E+003	14394	50370	0.1925	0.2223
7	113.9	174366.1	7.97E+003	17399	47365	0.2346	0.2687
8	114.0	174414.9	9.37E+003	20305	44459	0.2761	0.3135
9	114.1	174463.6	1.08E+004	23117	41648	0.3170	0.3569
10	114.1	174512.4	1.21E+004	25858	38906	0.3576	0.3993
11	114.2	174561.2	1.35E+004	28546	36219	0.3982	0.4408
12	114.3	174609.9	1.49E+004	31227	33538	0.4394	0.4822
13	114.4	174658.7	1.63E+004	33915	30850	0.4814	0.5237
14	114.4	174707.5	1.78E+004	36635	28129	0.5246	0.5657
15	114.5	174756.2	1.93E+004	39399	25366	0.5691	0.6083
16	114.6	174805.0	2.08E+004	42262	22503	0.6158	0.6525
17	114.6	174853.7	2.25E+004	45231	19533	0.6650	0.6984
18	114.7	174902.5	2.42E+004	48336	16428	0.7170	0.7463
19	114.8	174951.2	2.61E+004	51614	13150	0.7725	0.7970
20	114.8	175000.0	2.81E+004	55095	9670	0.8320	0.8507

HEATING CURVES SUMMARY

Eqp # 3 Unit type : HTXR Unit name: TT-616

Stream 6410

NP	Temp C	Pres Pa	Del H kW	Vapor kg/h	Liquid kg/h	Vap mole frac.	Vap mass frac.
1	37.0	405000.0	0.000	0	19201	0.0000	0.0000
2	40.0	401368.4	66.5	0	19201	0.0000	0.0000
3	43.0	397736.8	133.	0	19201	0.0000	0.0000
4	46.1	394105.3	200.	0	19201	0.0000	0.0000
5	49.1	390473.7	266.	0	19201	0.0000	0.0000
6	52.1	386842.1	333.	0	19201	0.0000	0.0000
7	55.1	383210.5	400.	0	19201	0.0000	0.0000
8	58.1	379578.9	466.	0	19201	0.0000	0.0000
9	61.2	375947.4	533.	0	19201	0.0000	0.0000
10	64.2	372315.8	600.	0	19201	0.0000	0.0000
11	67.2	368684.2	666.	0	19201	0.0000	0.0000
12	70.2	365052.6	733.	0	19201	0.0000	0.0000
13	73.3	361421.0	800.	0	19201	0.0000	0.0000
14	76.3	357789.5	867.	0	19201	0.0000	0.0000
15	79.3	354157.9	934.	0	19201	0.0000	0.0000
16	82.3	350526.3	1.00E+003	0	19201	0.0000	0.0000
17	85.3	346894.8	1.07E+003	0	19201	0.0000	0.0000
18	88.4	343263.2	1.14E+003	0	19201	0.0000	0.0000
19	91.4	339631.6	1.20E+003	0	19201	0.0000	0.0000
20	94.4	336000.0	1.27E+003	0	19201	0.0000	0.0000

Stream 6207

NP	Temp C	Pres Pa	Del H kW	Vapor kg/h	Liquid kg/h	Vap mole frac.	Vap mass frac.
1	99.4	101000.0	1.27E+003	738	17489	0.0377	0.0405
2	97.3	101000.0	798.	0	18227	0.0000	0.0000
3	95.2	101000.0	754.	0	18227	0.0000	0.0000
4	93.0	101000.0	709.	0	18227	0.0000	0.0000
5	90.9	101000.0	665.	0	18227	0.0000	0.0000
6	88.8	101000.0	620.	0	18227	0.0000	0.0000
7	86.7	101000.0	576.	0	18227	0.0000	0.0000
8	84.5	101000.0	532.	0	18227	0.0000	0.0000
9	82.4	101000.0	487.	0	18227	0.0000	0.0000
10	80.3	101000.0	443.	0	18227	0.0000	0.0000
11	78.2	101000.0	398.	0	18227	0.0000	0.0000
12	76.0	101000.0	354.	0	18227	0.0000	0.0000
13	73.9	101000.0	310.	0	18227	0.0000	0.0000
14	71.8	101000.0	266.	0	18227	0.0000	0.0000
15	69.7	101000.0	221.	0	18227	0.0000	0.0000
16	67.6	101000.0	177.	0	18227	0.0000	0.0000
17	65.4	101000.0	133.	0	18227	0.0000	0.0000
18	63.3	101000.0	88.7	0	18227	0.0000	0.0000
19	61.2	101000.0	44.5	0	18227	0.0000	0.0000
20	59.1	101000.0	0.3095	0	18227	0.0000	0.0000

HEATING CURVES SUMMARY

Eqp # 4 Unit type : HTXR Unit name: TT-627

Stream 6220

NP	Temp C	Pres Pa	Del H kW	Vapor kg/h	Liquid kg/h	Vap mole frac.	Vap mass frac.
1	113.9	170574.0	-1.73	46278	18486	0.6824	0.7146
2	113.9	170389.8	234.	46700	18064	0.6894	0.7211
3	113.8	170205.6	473.	47127	17637	0.6966	0.7277
4	113.8	170021.4	715.	47559	17205	0.7038	0.7343
5	113.8	169837.2	960.	47994	16770	0.7111	0.7411
6	113.8	169653.0	1.21E+003	48435	16329	0.7186	0.7479
7	113.7	169468.7	1.46E+003	48881	15883	0.7261	0.7548
8	113.7	169284.5	1.71E+003	49331	15433	0.7337	0.7617
9	113.7	169100.3	1.97E+003	49787	14977	0.7414	0.7687
10	113.7	168916.1	2.23E+003	50249	14515	0.7492	0.7759
11	113.6	168731.9	2.50E+003	50717	14047	0.7571	0.7831
12	113.6	168547.7	2.77E+003	51190	13574	0.7652	0.7904
13	113.6	168363.5	3.04E+003	51667	13097	0.7733	0.7978
14	113.6	168179.3	3.31E+003	52151	12613	0.7815	0.8052
15	113.5	167995.1	3.59E+003	52641	12123	0.7899	0.8128
16	113.5	167810.9	3.88E+003	53137	11627	0.7984	0.8205
17	113.5	167626.6	4.16E+003	53639	11125	0.8070	0.8282
18	113.5	167442.4	4.46E+003	54148	10616	0.8157	0.8361
19	113.4	167258.2	4.75E+003	54663	10101	0.8245	0.8440
20	113.4	167074.0	5.05E+003	55186	9578	0.8335	0.8521

Eqp # 5 Unit type : HTXR Unit name: TT-615

Stream 6201

NP	Temp C	Pres Pa	Del H kW	Vapor kg/h	Liquid kg/h	Vap mole frac.	Vap mass frac.
1	75.9	584000.0	0.000	0	448694	0.0000	0.0000
2	77.0	580368.4	566.	0	448694	0.0000	0.0000
3	78.1	576736.9	1.13E+003	0	448694	0.0000	0.0000
4	79.2	573105.2	1.70E+003	0	448694	0.0000	0.0000
5	80.3	569473.7	2.27E+003	0	448694	0.0000	0.0000
6	81.5	565842.1	2.83E+003	0	448694	0.0000	0.0000
7	82.6	562210.5	3.40E+003	0	448694	0.0000	0.0000
8	83.7	558578.9	3.97E+003	0	448694	0.0000	0.0000
9	84.8	554947.4	4.54E+003	0	448694	0.0000	0.0000
10	85.9	551315.8	5.10E+003	0	448694	0.0000	0.0000
11	87.0	547684.2	5.67E+003	0	448694	0.0000	0.0000
12	88.1	544052.6	6.24E+003	0	448694	0.0000	0.0000
13	89.2	540421.1	6.81E+003	0	448694	0.0000	0.0000
14	90.3	536789.4	7.38E+003	0	448694	0.0000	0.0000
15	91.4	533157.9	7.95E+003	0	448694	0.0000	0.0000
16	92.6	529526.3	8.52E+003	0	448694	0.0000	0.0000
17	93.7	525894.8	9.09E+003	0	448694	0.0000	0.0000
18	94.8	522263.1	9.66E+003	0	448694	0.0000	0.0000
19	95.9	518631.6	1.02E+004	0	448694	0.0000	0.0000
20	97.0	515000.0	1.08E+004	0	448694	0.0000	0.0000

HEATING CURVES SUMMARY

Stream 216

NP	Temp C	Pres Pa	Del H kW	Vapor kg/h	Liquid kg/h	Vap mole frac.	Vap mass frac.
1	102.0	108000.0	1.08E+004	18227	0	1.0000	1.0000
2	101.9	107631.6	1.08E+004	18227	0	1.0000	1.0000
3	101.7	107263.2	1.08E+004	18227	0	1.0000	1.0000
4	101.6	106894.7	1.08E+004	18227	0	1.0000	1.0000
5	101.5	106526.3	1.08E+004	18227	0	1.0000	1.0000
6	101.3	106157.9	1.08E+004	18227	0	1.0000	1.0000
7	101.2	105789.5	1.08E+004	18227	0	1.0000	1.0000
8	101.0	105421.1	1.08E+004	18227	0	1.0000	1.0000
9	100.9	105052.6	1.08E+004	18227	0	1.0000	1.0000
10	100.8	104684.2	8.93E+003	15248	2979	0.8335	0.8366
11	100.6	104315.8	6.45E+003	11274	6953	0.6120	0.6185
12	100.5	103947.4	4.80E+003	8614	9613	0.4643	0.4726
13	100.4	103578.9	3.62E+003	6718	11509	0.3597	0.3686
14	100.2	103210.5	2.74E+003	5279	12948	0.2807	0.2896
15	100.1	102842.1	2.04E+003	4144	14083	0.2189	0.2274
16	99.9	102473.7	1.48E+003	3223	15004	0.1692	0.1768
17	99.8	102105.3	1.02E+003	2456	15771	0.1280	0.1347
18	99.7	101736.8	625.	1798	16429	0.0932	0.0987
19	99.5	101368.4	289.	1234	16993	0.0635	0.0677
20	99.4	101000.0	-3.10	738	17489	0.0377	0.0405

Eqp # 6 Unit type : HTXR Unit name: TT-613

Stream 6203

NP	Temp C	Pres Pa	Del H kW	Vapor kg/h	Liquid kg/h	Vap mole frac.	Vap mass frac.
1	120.0	446000.0	0.000	0	448694	0.0000	0.0000
2	120.0	442368.4	0.000	0	448694	0.0000	0.0000
3	120.0	438736.8	0.000	0	448694	0.0000	0.0000
4	120.0	435105.3	0.000	0	448694	0.0000	0.0000
5	120.0	431473.7	0.000	0	448694	0.0000	0.0000
6	120.0	427842.1	0.000	0	448694	0.0000	0.0000
7	120.0	424210.5	0.000	0	448694	0.0000	0.0000
8	120.0	420578.9	0.000	0	448694	0.0000	0.0000
9	120.0	416947.4	0.000	0	448694	0.0000	0.0000
10	120.0	413315.8	0.000	0	448694	0.0000	0.0000
11	120.0	409684.2	0.000	0	448694	0.0000	0.0000
12	120.0	406052.6	0.000	0	448694	0.0000	0.0000
13	120.0	402421.1	0.000	0	448694	0.0000	0.0000
14	120.0	398789.5	0.000	0	448694	0.0000	0.0000
15	120.0	395157.9	0.000	0	448694	0.0000	0.0000
16	120.0	391526.3	0.000	0	448694	0.0000	0.0000
17	120.0	387894.8	0.000	0	448694	0.0000	0.0000
18	120.0	384263.2	0.000	0	448694	0.0000	0.0000
19	120.0	380631.6	0.000	0	448694	0.0000	0.0000
20	120.0	377000.0	0.000	0	448694	0.0000	0.0000

HEATING CURVES SUMMARY

Eqp # 7 Unit type : HTXR Unit name: TT-622

Stream 6219

NP	Temp C	Pres Pa	Del H kW	Vapor kg/h	Liquid kg/h	Vap mole frac.	Vap mass frac.
1	113.5	174074.0	0.000	0	64764	0.0000	0.0000
2	113.5	173889.8	407.	923	63841	0.0120	0.0142
3	113.5	173705.6	1.38E+003	3110	61654	0.0405	0.0480
4	113.6	173521.4	2.50E+003	5625	59139	0.0737	0.0869
5	113.6	173337.2	3.73E+003	8347	56417	0.1100	0.1289
6	113.6	173153.0	5.01E+003	11129	53635	0.1476	0.1718
7	113.6	172968.7	6.29E+003	13894	50870	0.1856	0.2145
8	113.6	172784.5	7.55E+003	16566	48198	0.2228	0.2558
9	113.7	172600.3	8.80E+003	19167	45597	0.2597	0.2960
10	113.7	172416.1	1.00E+004	21687	43077	0.2960	0.3349
11	113.7	172231.9	1.12E+004	24143	40621	0.3321	0.3728
12	113.7	172047.7	1.25E+004	26551	38213	0.3680	0.4100
13	113.7	171863.5	1.37E+004	28923	35841	0.4039	0.4466
14	113.8	171679.3	1.49E+004	31294	33470	0.4404	0.4832
15	113.8	171495.1	1.61E+004	33673	31091	0.4775	0.5199
16	113.8	171310.9	1.74E+004	36075	28689	0.5155	0.5570
17	113.8	171126.6	1.87E+004	38521	26243	0.5548	0.5948
18	113.8	170942.4	2.01E+004	41012	23752	0.5953	0.6333
19	113.9	170758.2	2.15E+004	43597	21167	0.6378	0.6732
20	113.9	170574.0	2.30E+004	46278	18486	0.6824	0.7146

Stream 6222

NP	Temp C	Pres Pa	Del H kW	Vapor kg/h	Liquid kg/h	Vap mole frac.	Vap mass frac.
1	124.3	375864.9	2.30E+004	97360	0	1.0000	1.0000
2	124.0	375680.7	2.23E+004	95872	1488	0.9786	0.9847
3	123.7	375496.4	2.16E+004	94364	2996	0.9573	0.9692
4	123.4	375312.2	2.08E+004	92816	4544	0.9358	0.9533
5	123.1	375128.0	2.01E+004	91223	6137	0.9141	0.9370
6	122.8	374943.8	1.93E+004	89568	7792	0.8920	0.9200
7	122.5	374759.6	1.86E+004	87833	9527	0.8694	0.9021
8	122.2	374575.4	1.78E+004	86001	11359	0.8460	0.8833
9	121.9	374391.2	1.69E+004	84044	13316	0.8217	0.8632
10	121.6	374207.0	1.61E+004	81930	15430	0.7961	0.8415
11	121.2	374022.8	1.52E+004	79625	17735	0.7689	0.8178
12	120.9	373838.6	1.42E+004	77073	20287	0.7396	0.7916
13	120.6	373654.3	1.31E+004	74211	23149	0.7077	0.7622
14	120.3	373470.1	1.19E+004	70962	26398	0.6724	0.7289
15	120.0	373285.9	1.06E+004	67208	30152	0.6327	0.6903
16	119.7	373101.7	9.11E+003	62813	34547	0.5874	0.6452
17	119.4	372917.5	7.38E+003	57587	39773	0.5348	0.5915
18	119.1	372733.3	5.35E+003	51289	46071	0.4730	0.5268
19	118.8	372549.1	2.93E+003	43581	53779	0.3990	0.4476
20	118.5	372364.8	0.000	34016	63344	0.3091	0.3494

HEATING CURVES SUMMARY

Eqp # 8 Unit type : HTXR Unit name: TT-624

Stream 6223

NP	Temp C	Pres Pa	Del H kW	Vapor kg/h	Liquid kg/h	Vap mole frac.	Vap mass frac.
1	118.5	372364.8	9.61E+003	34016	63344	0.3091	0.3494
2	118.4	372180.7	9.22E+003	32716	64644	0.2970	0.3360
3	118.4	371996.4	8.81E+003	31374	65986	0.2845	0.3222
4	118.3	371812.2	8.40E+003	29999	67361	0.2718	0.3081
5	118.3	371628.0	7.97E+003	28586	68774	0.2588	0.2936
6	118.2	371443.8	7.53E+003	27131	70229	0.2454	0.2787
7	118.2	371259.6	7.09E+003	25635	71725	0.2316	0.2633
8	118.1	371075.4	6.63E+003	24094	73266	0.2175	0.2475
9	118.1	370891.2	6.15E+003	22501	74859	0.2029	0.2311
10	118.0	370706.9	5.67E+003	20867	76493	0.1880	0.2143
11	118.0	370522.8	5.17E+003	19187	78173	0.1727	0.1971
12	117.9	370338.5	4.66E+003	17454	79906	0.1569	0.1793
13	117.9	370154.3	4.13E+003	15667	81693	0.1407	0.1609
14	117.8	369970.1	3.59E+003	13820	83540	0.1240	0.1419
15	117.8	369785.9	3.03E+003	11922	85438	0.1069	0.1225
16	117.7	369601.7	2.46E+003	9956	87404	0.0892	0.1023
17	117.7	369417.5	1.87E+003	7940	89420	0.0710	0.0816
18	117.6	369233.3	1.26E+003	5850	91510	0.0523	0.0601
19	117.6	369049.1	642.	3706	93654	0.0331	0.0381
20	117.5	368864.8	-1.20	1481	95879	0.0132	0.0152

Eqp # 9 Unit type : HTXR Unit name: TT-623

Stream 6106

NP	Temp C	Pres Pa	Del H kW	Vapor kg/h	Liquid kg/h	Vap mole frac.	Vap mass frac.
1	37.0	653000.0	0.000	0	448694	0.0000	0.0000
2	39.0	649368.4	1.03E+003	0	448694	0.0000	0.0000
3	41.1	645736.8	2.07E+003	0	448694	0.0000	0.0000
4	43.1	642105.2	3.10E+003	0	448694	0.0000	0.0000
5	45.2	638473.6	4.14E+003	0	448694	0.0000	0.0000
6	47.2	634842.1	5.17E+003	0	448694	0.0000	0.0000
7	49.3	631210.5	6.20E+003	0	448694	0.0000	0.0000
8	51.3	627578.9	7.24E+003	0	448694	0.0000	0.0000
9	53.4	623947.4	8.28E+003	0	448694	0.0000	0.0000
10	55.4	620315.8	9.31E+003	0	448694	0.0000	0.0000
11	57.5	616684.2	1.03E+004	0	448694	0.0000	0.0000
12	59.5	613052.6	1.14E+004	0	448694	0.0000	0.0000
13	61.6	609421.1	1.24E+004	0	448694	0.0000	0.0000
14	63.6	605789.4	1.35E+004	0	448694	0.0000	0.0000
15	65.7	602157.9	1.45E+004	0	448694	0.0000	0.0000
16	67.7	598526.3	1.55E+004	0	448694	0.0000	0.0000
17	69.8	594894.7	1.66E+004	0	448694	0.0000	0.0000
18	71.8	591263.1	1.76E+004	0	448694	0.0000	0.0000
19	73.9	587631.6	1.87E+004	0	448694	0.0000	0.0000
20	75.9	584000.0	1.97E+004	0	448694	0.0000	0.0000

HEATING CURVES SUMMARY

Stream 6216

NP	Temp C	Pres Pa	Del H kW	Vapor kg/h	Liquid kg/h	Vap mole frac.	Vap mass frac.
1	80.9	112000.0	1.97E+004	111721	0	1.0000	1.0000
2	80.9	111815.8	1.97E+004	111721	0	1.0000	1.0000
3	80.8	111631.6	1.97E+004	111721	0	1.0000	1.0000
4	80.8	111447.4	1.97E+004	111721	0	1.0000	1.0000
5	80.7	111263.2	1.97E+004	111721	0	1.0000	1.0000
6	80.7	111079.0	1.97E+004	111721	0	1.0000	1.0000
7	80.6	110894.7	1.97E+004	111721	0	1.0000	1.0000
8	80.6	110710.5	1.97E+004	111721	0	1.0000	1.0000
9	80.5	110526.3	1.74E+004	102669	9052	0.9188	0.9190
10	80.5	110342.1	1.49E+004	93334	18387	0.8350	0.8354
11	80.5	110157.9	1.23E+004	83073	28648	0.7430	0.7436
12	80.4	109973.7	1.04E+004	75730	35991	0.6772	0.6778
13	80.4	109789.5	8.63E+003	68928	42793	0.6163	0.6170
14	80.3	109605.3	6.55E+003	60878	50843	0.5442	0.5449
15	80.3	109421.1	5.22E+003	55718	56003	0.4980	0.4987
16	80.2	109236.8	3.98E+003	50910	60811	0.4550	0.4557
17	80.2	109052.6	2.83E+003	46467	65254	0.4153	0.4159
18	80.2	108868.4	1.80E+003	42475	69246	0.3795	0.3802
19	80.1	108684.2	838.	38762	72959	0.3463	0.3470
20	80.1	108500.0	-0.9378	35520	76201	0.3173	0.3179

Eqp # 10 Unit type : HTXR Unit name: TT-626

Stream 6217

NP	Temp C	Pres Pa	Del H kW	Vapor kg/h	Liquid kg/h	Vap mole frac.	Vap mass frac.
1	80.1	108500.0	9.22E+003	35520	76201	0.3173	0.3179
2	80.0	108315.8	7.93E+003	30548	81173	0.2729	0.2734
3	80.0	108131.6	6.78E+003	26077	85644	0.2329	0.2334
4	79.9	107947.4	5.76E+003	22146	89575	0.1978	0.1982
5	79.9	107763.2	4.85E+003	18607	93114	0.1662	0.1665
6	79.8	107578.9	4.06E+003	15573	96148	0.1391	0.1394
7	79.8	107394.7	3.31E+003	12681	99040	0.1132	0.1135
8	79.8	107210.5	2.70E+003	10291	101430	0.0919	0.0921
9	79.7	107026.3	2.14E+003	8142	103579	0.0727	0.0729
10	79.7	106842.1	1.66E+003	6319	105402	0.0564	0.0566
11	79.6	106657.9	1.23E+003	4634	107087	0.0414	0.0415
12	79.6	106473.7	884.	3319	108402	0.0296	0.0297
13	79.5	106289.5	594.	2211	109510	0.0197	0.0198
14	79.5	106105.3	369.	1352	110369	0.0121	0.0121
15	79.4	105921.1	169.	594	111127	0.0053	0.0053
16	79.4	105736.8	54.0	162	111559	0.0014	0.0014
17	79.4	105552.6	8.12	0	111721	0.0000	0.0000
18	79.3	105368.4	3.86	0	111721	0.0000	0.0000
19	79.3	105184.2	-0.3939	0	111721	0.0000	0.0000
20	79.2	105000.0	53.8	227	111494	0.0020	0.0020

HEATING CURVES SUMMARY

Eqp # 11 Unit type : HTXR Unit name:

Stream 6202

NP	Temp C	Pres Pa	Del H kW	Vapor kg/h	Liquid kg/h	Vap mole frac.	Vap mass frac.
1	97.0	515000.0	0.000	0	448694	0.0000	0.0000
2	98.2	511368.4	623.	0	448694	0.0000	0.0000
3	99.4	507736.8	1.25E+003	0	448694	0.0000	0.0000
4	100.6	504105.2	1.87E+003	0	448694	0.0000	0.0000
5	101.8	500473.7	2.49E+003	0	448694	0.0000	0.0000
6	103.1	496842.1	3.12E+003	0	448694	0.0000	0.0000
7	104.3	493210.5	3.74E+003	0	448694	0.0000	0.0000
8	105.5	489578.9	4.37E+003	0	448694	0.0000	0.0000
9	106.7	485947.4	4.99E+003	0	448694	0.0000	0.0000
10	107.9	482315.8	5.62E+003	0	448694	0.0000	0.0000
11	109.1	478684.2	6.25E+003	0	448694	0.0000	0.0000
12	110.3	475052.6	6.87E+003	0	448694	0.0000	0.0000
13	111.5	471421.1	7.50E+003	0	448694	0.0000	0.0000
14	112.7	467789.5	8.13E+003	0	448694	0.0000	0.0000
15	113.9	464157.9	8.76E+003	0	448694	0.0000	0.0000
16	115.2	460526.3	9.39E+003	0	448694	0.0000	0.0000
17	116.4	456894.7	1.00E+004	0	448694	0.0000	0.0000
18	117.6	453263.1	1.06E+004	0	448694	0.0000	0.0000
19	118.8	449631.6	1.13E+004	0	448694	0.0000	0.0000
20	120.0	446000.0	1.19E+004	0	448694	0.0000	0.0000

Stream 6210

NP	Temp C	Pres Pa	Del H kW	Vapor kg/h	Liquid kg/h	Vap mole frac.	Vap mass frac.
1	148.0	463100.0	1.19E+004	0	435442	0.0000	0.0000
2	146.8	459468.4	1.13E+004	0	435442	0.0000	0.0000
3	145.5	455836.8	1.06E+004	0	435442	0.0000	0.0000
4	144.3	452205.2	1.00E+004	0	435442	0.0000	0.0000
5	143.1	448573.7	9.39E+003	0	435442	0.0000	0.0000
6	141.9	444942.1	8.76E+003	0	435442	0.0000	0.0000
7	140.7	441310.5	8.13E+003	0	435442	0.0000	0.0000
8	139.4	437678.9	7.50E+003	0	435442	0.0000	0.0000
9	138.2	434047.3	6.88E+003	0	435442	0.0000	0.0000
10	137.0	430415.8	6.25E+003	0	435442	0.0000	0.0000
11	135.8	426784.2	5.62E+003	0	435442	0.0000	0.0000
12	134.6	423152.6	5.00E+003	0	435442	0.0000	0.0000
13	133.3	419521.0	4.37E+003	0	435442	0.0000	0.0000
14	132.1	415889.4	3.75E+003	0	435442	0.0000	0.0000
15	130.9	412257.9	3.12E+003	0	435442	0.0000	0.0000
16	129.7	408626.3	2.50E+003	0	435442	0.0000	0.0000
17	128.5	404994.7	1.87E+003	0	435442	0.0000	0.0000
18	127.2	401363.2	1.25E+003	0	435442	0.0000	0.0000
19	126.0	397731.6	623.	0	435442	0.0000	0.0000
20	124.8	394100.0	0.3001	0	435442	0.0000	0.0000

HEATING CURVES SUMMARY

Eqp # 12 Unit type : HTXR Unit name: TT-625

Stream 6205

NP	Temp C	Pres Pa	Del H kW	Vapor kg/h	Liquid kg/h	Vap mole frac.	Vap mass frac.
1	94.4	336000.0	0.000	0	19201	0.0000	0.0000
2	95.7	336000.0	30.1	0	19201	0.0000	0.0000
3	97.1	336000.0	60.2	0	19201	0.0000	0.0000
4	98.4	336000.0	90.2	0	19201	0.0000	0.0000
5	99.8	336000.0	120.	0	19201	0.0000	0.0000
6	101.1	336000.0	150.	0	19201	0.0000	0.0000
7	102.5	336000.0	181.	0	19201	0.0000	0.0000
8	103.8	336000.0	211.	0	19201	0.0000	0.0000
9	105.2	336000.0	241.	0	19201	0.0000	0.0000
10	106.5	336000.0	271.	0	19201	0.0000	0.0000
11	107.9	336000.0	301.	0	19201	0.0000	0.0000
12	109.2	336000.0	332.	0	19201	0.0000	0.0000
13	110.6	336000.0	362.	0	19201	0.0000	0.0000
14	111.9	336000.0	392.	0	19201	0.0000	0.0000
15	113.3	336000.0	422.	0	19201	0.0000	0.0000
16	114.6	336000.0	453.	0	19201	0.0000	0.0000
17	116.0	336000.0	483.	0	19201	0.0000	0.0000
18	117.3	336000.0	513.	0	19201	0.0000	0.0000
19	118.7	336000.0	544.	0	19201	0.0000	0.0000
20	120.0	336000.0	574.	0	19201	0.0000	0.0000

Stream 6209

NP	Temp C	Pres Pa	Del H kW	Vapor kg/h	Liquid kg/h	Vap mole frac.	Vap mass frac.
1	149.1	463100.0	574.	0	435442	0.0000	0.0000
2	149.0	463100.0	543.	0	435442	0.0000	0.0000
3	149.0	463100.0	513.	0	435442	0.0000	0.0000
4	148.9	463100.0	483.	0	435442	0.0000	0.0000
5	148.9	463100.0	453.	0	435442	0.0000	0.0000
6	148.8	463100.0	423.	0	435442	0.0000	0.0000
7	148.7	463100.0	393.	0	435442	0.0000	0.0000
8	148.7	463100.0	362.	0	435442	0.0000	0.0000
9	148.6	463100.0	332.	0	435442	0.0000	0.0000
10	148.6	463100.0	302.	0	435442	0.0000	0.0000
11	148.5	463100.0	272.	0	435442	0.0000	0.0000
12	148.5	463100.0	241.	0	435442	0.0000	0.0000
13	148.4	463100.0	211.	0	435442	0.0000	0.0000
14	148.3	463100.0	181.	0	435442	0.0000	0.0000
15	148.3	463100.0	151.	0	435442	0.0000	0.0000
16	148.2	463100.0	121.	0	435442	0.0000	0.0000
17	148.2	463100.0	90.9	0	435442	0.0000	0.0000
18	148.1	463100.0	60.5	0	435442	0.0000	0.0000
19	148.0	463100.0	30.6	0	435442	0.0000	0.0000
20	148.0	463100.0	0.3001	0	435442	0.0000	0.0000

HEATING CURVES SUMMARY

Eqp # 13 Unit type : HTXR Unit name: TT-628

Stream 6225

NP	Temp C	Pres Pa	Del H kW	Vapor kg/h	Liquid kg/h	Vap mole frac.	Vap mass frac.
1	124.8	394100.0	5.60E+003	0	435442	0.0000	0.0000
2	124.2	390468.4	5.30E+003	0	435442	0.0000	0.0000
3	123.6	386836.8	5.01E+003	0	435442	0.0000	0.0000
4	123.1	383205.2	4.71E+003	0	435442	0.0000	0.0000
5	122.5	379573.7	4.42E+003	0	435442	0.0000	0.0000
6	121.9	375942.1	4.12E+003	0	435442	0.0000	0.0000
7	121.3	372310.5	3.83E+003	0	435442	0.0000	0.0000
8	120.7	368678.9	3.53E+003	0	435442	0.0000	0.0000
9	120.2	365047.3	3.24E+003	0	435442	0.0000	0.0000
10	119.6	361415.8	2.94E+003	0	435442	0.0000	0.0000
11	119.0	357784.2	2.65E+003	0	435442	0.0000	0.0000
12	118.4	354152.6	2.35E+003	0	435442	0.0000	0.0000
13	117.9	350521.1	2.06E+003	0	435442	0.0000	0.0000
14	117.3	346889.5	1.77E+003	0	435442	0.0000	0.0000
15	116.7	343257.9	1.47E+003	0	435442	0.0000	0.0000
16	116.1	339626.3	1.18E+003	0	435442	0.0000	0.0000
17	115.5	335994.7	882.	0	435442	0.0000	0.0000
18	115.0	332363.2	588.	0	435442	0.0000	0.0000
19	114.4	328731.6	294.	0	435442	0.0000	0.0000
20	113.8	325100.0	0.000	0	435442	0.0000	0.0000

APPENDIX III
UTILITY SUMMARY

Table 4.1
Utilities Summary

Area	Steam: kg/h LP SERI	Steam: kg/h LP CSI	Steam: kg/h HP SERI	Steam: kg/h HP CSI	Electricity kW SERI	Electricity kW CSI	Cooling Water 10^3 kg/h SERI	Cooling Water 10^3 kg/h CSI	Chilled Water 10^3 kg/h SERI	Chilled Water 10^3 kg/h CSI	Fermentation Air Nm^3/h SERI	Fermentation Air Nm^3/h CSI
100 Wood Handling					6845	6845	91					
200 Pretreatment	13876	30400	18755	21000	263	188	1803	1920				
300 Xylose Fermentation					553	855	3055	3293	12	12	14023	8423
400 Cellulase Production	51	51			658	919		69	403	945	16923	22300
500 SSF					2054	1974	3658	2155	36	36	55777	10800
600 Ethanol Purification	77998			95194	290	316	2378	1296				
700 Off-site Tankage					79	79						
800 Wastewater Treatment					381	908	822	570				
900 Utilities and Miscellaneous	9553	9070			9662	7352	3514	3514	316	316		
Totals	101478	39521	18755	116194	20785	19437	15322	12817	768	1309	86724	41523
%difference		-61.1%		519.5%		-6.5%		-16.3%		70.5%		-52.1%

Notes:

1) CSI Area 100 electricity estimated as same as SERI 1991
2) Utilities Electricity consumption based on scaled utility requirements, and a chilled water system consuming 0.75 kW per ton of refrigeration.

Reasons for Difference from 1991 SERI Report:

1) Ethanol Purification steam higher because 1991 columns were undersized.
2) HP steam higher because there is more water to heat to 160°C, and ethanol purification uses HP, not LP Steam.
3) Cooling water reduced because of heat integration.
5) Chilled water increase due to need to cool recycle water for seed fermenters.
6) Fermentation air for 1991 SERI report included a second SSF seed train.

APPENDIX IV
COMPONENT BALANCES

FIGURE A.IV.1
ETHANOL BALANCE, KG/H

$$\text{ETHANOL RECOVERY} = \frac{21{,}124}{21{,}685} = 97.4\%$$

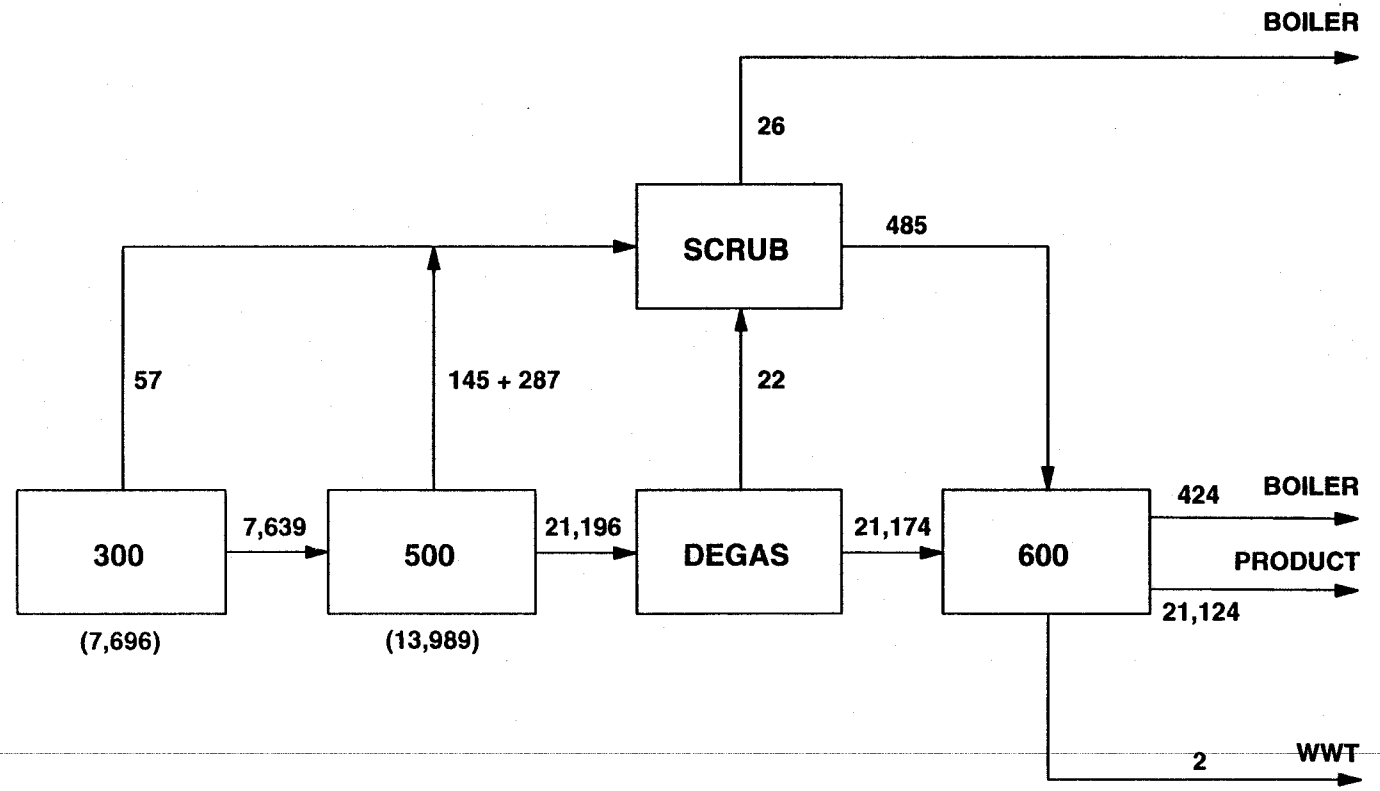

G:\94Q3\7951\RP\JJP1(dr)

CHEM SYSTEMS

FIGURE A.IV.2
WATER BALANCE, KG/H

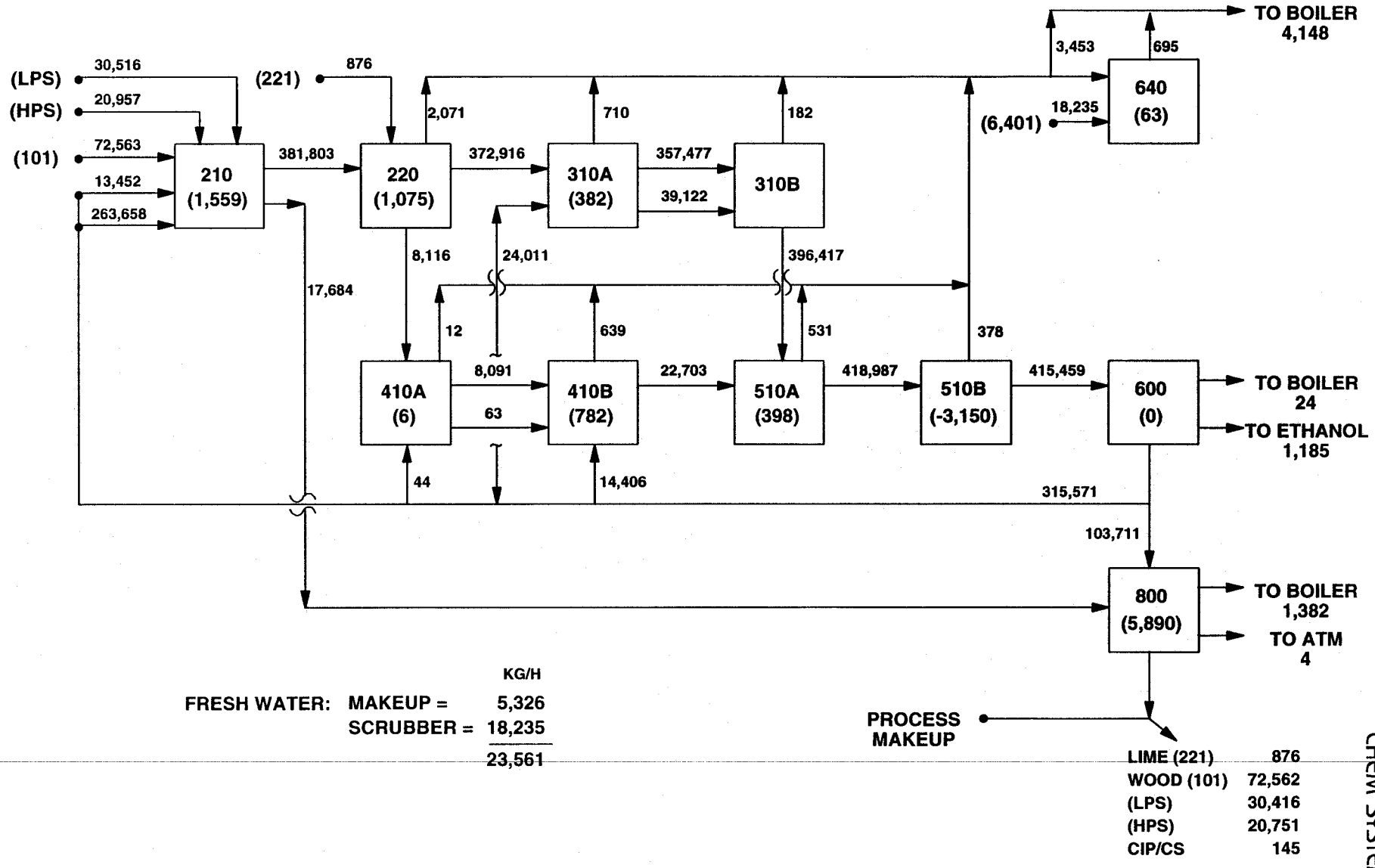

		KG/H
FRESH WATER:	MAKEUP =	5,326
	SCRUBBER =	18,235
		23,561

LIME (221)	876
WOOD (101)	72,562
(LPS)	30,416
(HPS)	20,751
CIP/CS	145

CHEM SYSTEMS

G:\94Q3\7951\RP\JJP2(dr)

TABLE A.IV.1
WATER BALANCE SUMMARY

The following summarizes the water balance for the plant. The water balance below does not include BFW makeup for the turbogenerator (co-gen) excess steam, nor makeup for wood washing water. Wood washing water purge should not be recycled due to the presence of ash and other contaminants.

	kg/h
Process makeup[1]	5,330
Somber	18,235
Utility boiler feed water[2]	20,863
Cooling tower water lesser[3]	551,131
Chilled water makeup	1,309
Total	**596,868**

(1) Includes any steam used for direct contact, such as in Area 200.
(2) Assumes 100 percent recycle of condensate, with 20 percent loss of condensate.
(3) Assumes 4.3 percent losses in circuit.
(4) Assumes 0.1 percent losses in circuit.

FIGURE A.IV.3
GYPSUM BALANCE

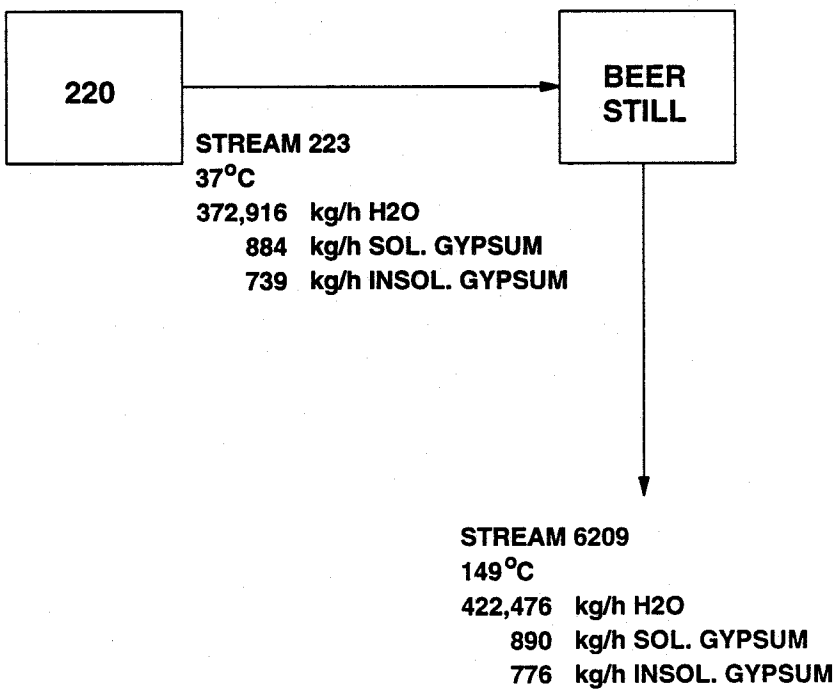

Water addition prior to beer still
is enough to offset lower solubility
due to temperature range.
Plating should be minimal.

APPENDIX VII
STEAM BALANCE

Job Name: STMBALRV

Date: 10-26-94 Time: 11:19

Steam balance for CSI case, Radian design

FLOWSHEET SUMMARY

Equipment	Label	Stream Numbers
1	FIRE HB-901	6 -7
2	EXPN GZ-911(HT25)	10 -9
3	EXPN GZ-911(LT10)	13 -16
4	DIVI	8 -10 -11 -18
5	DIVI	9 -13 -14 -15
6	HTXR	11 5 -12 -6
7	HTXR	16 -17
8	PUMP PP-901	2 -3
9	PUMP PP-908	4 -5
10	MIXE GV-906	15 12 3 -4
11	MIXE	17 1 -2
12	EXPN GZ-911(HT25)	7 -8

Stream Connections

Stream	Equipment From	Equipment To	Stream	Equipment From	Equipment To	Stream	Equipment From	Equipment To
1		11	7	1	12	13	5	3
2	11	8	8	12	4	14	5	
3	8	10	9	2	5	15	5	10
4	10	9	10	4	2	16	3	7
5	9	6	11	4	6	17	7	11
6	6	1	12	6	10	18	4	

Equipment Calculation Sequence
11 8 10 9 6 1 12 4 2 5 3 7

Equipment Recycle Sequence
11 8 10 9 6 1 12 4 2 5 3 7

Recycle Cut Streams
17 15 12 11

Recycle Convergence Method: Direct Substitution

Max. loop iterations 40

Recycle Convergence Tolerance

Flow rate	1.000E-003
Temperature	1.000E-003
Pressure	1.000E-003

Enthalpy	1.000E-003
Vapor frac.	1.000E-003

Recycle calculation has converged.

COMPONENTS

	ID #	Name
1	62	Water

THERMODYNAMICS

K-value model	:	SRK Water/Hydrocarbon immiscible
Enthalpy model	:	SRK
Liquid density	:	Library

Overall Mass Balance	kmol/h		kg/h	
	Input	Output	Input	Output
Water	8643.560	8643.560	155713.722	155713.722
Total	8643.560	8643.560	155713.725	155713.725

EQUIPMENT SUMMARIES

Fired Heater Summary

Equip. No.	1
Name	HB-901
Temperature Out C	510.0000
Pressure Drop Pa	2.6117e+006
Heat Absorbed kW	171203.1406
Fuel Usage(SCF)	865433.3125

Expander Summary

Equip. No.	2	3	12
Name	GZ-911(HT25)	GZ-911(LT10)	GZ-911(HT25)
Type of Expander:	2	1	1
Pressure out Pa	461328.4062	11858.9873	1.1811e+006
Efficiency	0.7911	0.8181	0.8470
Actual power kW	-3469.1267	-4120.9185	-30505.1445
Cp/Cv	1.4712	1.5089	1.4167
Ideal Cp/Cv	1.2490	1.2530	1.2213
Theoretical power kW		-5037.1821	-36015.5195

Divider Summary

Equip. No.	4	5
Name		
Split based on	3	3
Output stream #2	20230.2188	39521.0508
Output stream #3	116192.6719	17312.2598

Heat Exchanger Summary

Equip. No.	6	7
Name		
Pressure drop 1 Pa	82530.2812	6.8948
Pressure drop 2 Pa	6.8948	
T Out Str 1 C	154.3889	
VF Out Str 1		0.0010
Calc Ht Duty kW	12673.4424	-18888.0195
LMTD C	61.1518	
LMTD Corr F	1.0000	

EQUIPMENT SUMMARIES

Pump Summary

Equip. No.		8	9
Name		PP-901	PP-908
Output pressure	Pa	999947.0625	1.3053e+007
Efficiency		0.8000	0.8000
Calculated power	kW	65.3448	1037.8427

Mixer Summary

Equip. No.		10	11
Name		GV-906	
Output Pressure	Pa	429060.9062	11858.9873

STREAM PROPERTIES

Stream No.	1	2	3	4
Name	process rtn			
- - Overall - -				
Mass flow kg/h	155713.7247	188077.5545	188077.5545	225620.0200
Temp C	49.1315	49.1315	49.5454	105.7234
Pres Pa	11858.9873	11858.9873	999947.0625	429060.9062
Vapor mass fraction	1.000E-005	0.0000	0.0000	0.0000
Enth kW	8899.	1.077E+004	1.083E+004	2.781E+004
Std. sp gr , wtr = 1	1.000	1.000	1.000	1.000
Std. sp gr , air = 1	0.622	0.622	0.622	0.622
Average mol wt	18.0150	18.0150	18.0150	18.0150
Actual dens kg/m3	879.378	988.189	988.003	953.597
Actual vol m3/h	177.0725	190.3255	190.3612	236.5989

STREAM PROPERTIES

Stream No.	5	6	7	8
Name				
- - Overall - -				
Mass flow kg/h	225620.0200	225620.0200	225620.0200	225620.0200
Temp C	109.6322	156.7491	510.0000	237.8812
Pres Pa	13053159.0000	13053153.0000	10441417.0000	1181072.3750
Vapor mass fraction	0.0000	0.0000	1.000	1.000
Enth kW	2.885E+004	4.152E+004	2.127E+005	1.822E+005
Std. sp gr , wtr = 1	1.000	1.000	1.000	1.000
Std. sp gr , air = 1	0.622	0.622	0.622	0.622
Average mol wt	18.0150	18.0150	18.0150	18.0150
Actual dens kg/m3	950.639	910.182	31.360	5.221
Actual vol m3/h	237.3351	247.8846	7194.4971	43211.6778

STREAM PROPERTIES

Stream No.	9	10	11	12
Name				
- - Overall - -				
Mass flow kg/h	89197.1394	89197.1394	20230.2197	20230.2197
Temp C	159.2655	237.8812	237.8812	154.3889
Pres Pa	461328.4062	1181072.3750	1181072.3750	1098542.1250
Vapor mass fraction	1.000	1.000	1.000	0.0000
Enth kW	6.857E+004	7.204E+004	1.634E+004	3665.
Std. sp gr , wtr = 1	1.000	1.000	1.000	1.000
Std. sp gr , air = 1	0.622	0.622	0.622	0.622
Average mol wt	18.0150	18.0150	18.0150	18.0150
Actual dens kg/m3	2.373	5.221	5.221	912.422
Actual vol m3/h	37582.8090	17083.4031	3874.5751	22.1720

STREAM PROPERTIES

Stream No.	13	14	15	16
Name		LP STM		
- - Overall - -				
Mass flow kg/h	32363.8298	39521.0496	17312.2600	32363.8262
Temp C	159.2655	159.2655	159.2655	49.1315
Pres Pa	461328.4062	461328.4062	461328.4062	11858.9873
Vapor mass fraction	1.000	1.000	1.000	0.88216
Enth kW	2.488E+004	3.038E+004	1.331E+004	2.076E+004
Std. sp gr , wtr = 1	1.000	1.000	1.000	1.000
Std. sp gr , air = 1	0.622	0.622	0.622	0.622
Average mol wt	18.0150	18.0150	18.0150	18.0150
Actual dens kg/m3	2.373	2.373	2.373	0.091
Actual vol m3/h	13636.3527	16652.0154	7294.4422	357520.2649

STREAM PROPERTIES

Stream No.	17	18
Name		MP STM
- - Overall - -		
Mass flow kg/h	32363.8262	116192.6751
Temp C	49.1198	237.8812
Pres Pa	11852.0928	1181072.3750
Vapor mass fraction	0.0000	1.000
Enth kW	1870.	9.384E+004
Std. sp gr , wtr = 1	1.000	1.000
Std. sp gr , air = 1	0.622	0.622
Average mol wt	18.0150	18.0150
Actual dens kg/m3	988.194	5.221
Actual vol m3/h	32.7505	22253.7000

FLOW SUMMARIES

Stream No.	1	2	3	4
Stream Name	process rtn			
Temp C	49.1315	49.1315	49.5454	105.7234
Pres Pa	11858.9873	11858.9873	999947.0625	429060.9062
Enth kW	8898.6	10769.	10834.	27808.
Vapor mass fraction	1.0000E-005	0.00000	0.00000	0.00000
Total kg/h	155713.7247	188077.5545	188077.5545	225620.0200
Flowrates in kg/h				
Water	155713.7247	188077.5545	188077.5545	225620.0200

Stream No.	5	6	7	8
Stream Name				
Temp C	109.6322	156.7491	510.0000	237.8812
Pres Pa	13053159.0000	13053153.0000	10441417.0000	1181072.3750
Enth kW	28846.	41519.	2.1272E+005	1.8222E+005
Vapor mass fraction	0.00000	0.00000	1.0000	1.0000
Total kg/h	225620.0200	225620.0200	225620.0200	225620.0200
Flowrates in kg/h				
Water	225620.0200	225620.0200	225620.0200	225620.0200

Stream No.	9	10	11	! 12
Stream Name				
Temp C	159.2655	237.8812	237.8812	154.3889
Pres Pa	461328.4062	1181072.3750	1181072.3750	1098542.1250
Enth kW	68569.	72038.	16338.	3665.1
Vapor mass fraction	1.0000	1.0000	1.0000	0.00000
Total kg/h	89197.1394	89197.1394	20230.2197	20230.2197
Flowrates in kg/h				
Water	89197.1394	89197.1394	20230.2197	20230.2197

Stream No.	13	14	15	16
Stream Name		LP STM		
Temp C	159.2655	159.2655	159.2655	49.1315
Pres Pa	461328.4062	461328.4062	461328.4062	11858.9873
Enth kW	24879.	30381.	13309.	20758.
Vapor mass fraction	1.0000	1.0000	1.0000	0.882157
Total kg/h	32363.8298	39521.0496	17312.2600	32363.8262
Flowrates in kg/h				
Water	32363.8298	39521.0496	17312.2600	32363.8262

Stream No.	17	18
Stream Name		MP STM
Temp C	49.1198	237.8812
Pres Pa	11852.0928	1181072.3750
Enth kW	1870.3	93840.
Vapor mass fraction	0.00000	1.0000
Total kg/h	32363.8262	116192.6751
Flowrates in kg/h		
Water	32363.8262	116192.6751

APPENDIX VIII
SENSITIVITY ANALYSIS RESULTS

Table 4.1
Utilities Summary: Sensitivity

	Steam: kg/h				Electricity		Cooling Water		Chilled Water		Fermentation Air	
	LP		HP		kW		10^3 kg/h		10^3 kg/h		Nm^3/h	
Area	Base	Sens	Base	Sens	Base	Sens	Base	Sens	Base	Sens	Base	Sens
100 Wood Handling	0		0		6845	6845	0		0		0	
200 Pretreatment	30400	30300	21000	20200	188	188	1920	1920	0		0	
300 Xylose Fermentatio	0		0		855	793	3293	2952	12	12	8423	0
400 Cellulase Productio	51	51	0		919	919	69	69	945	945	22300	22300
500 SSF	0		0		1974	1557	2155	1740	36	36	10800	0
600 Ethanol Purification	0		95194	59014	316	316	1296	828	0		0	
700 Off-site Tankage	0		0		79	79	0		0		0	
800 Wastewater Treatm	0		0		908	908	570	570	0		0	
900 Utilities and Miscella	9070	9070	0		7352	4856	3514	3514	316	316	0	
Totals	39521	39421	116194	79214	19437	16461	12817	11594	1309	1309	41523	22300
%difference		-0.3%		-31.8%		-15.3%		-9.5%		0.0%		-46.3%
Unit consumption per kg	1.9522	1.4983	5.7394	3.0108	0.9601	0.6257	0.6331	0.4407	0.0647	0.0497	2.0510	0.8476
		-23.25%		-47.54%		-34.83%		-30.40%		-23.05%		-58.67%

Ethanol Production, kg/h
Base: 20245
Sensitivity: 26310

EQUIPMENT COST BY SECTION

PLANT AREA	*Chem Systems* BASE EQUIPMENT COST ($ MM)	INSTALLED EQUIPMENT COST ($ MM)
ISBL		
100 WOOD HANDLING	2.48	3.20
200 PREHYDROLYSIS	5.19	7.75
300 XYLOSE FERMENTATION	1.02	1.45
400 CELLULASE PRODUCTION	1.03	1.50
500 SSF	4.74	7.34
600 ETHANOL RECOVERY	3.80	6.57
Total	**18.26**	**27.81**
OSBL		
700 OFF–SITE TANKAGE	1.39	2.12
800 WASTE TREATMENT	4.16	5.70
900 UTILITIES		
Boiler Feed Water and Boiler Package	19.57	25.68
Process Water	0.20	0.43
Turbogenerator	6.38	9.58
Cooling Water	2.40	2.88
Chilled Water Package	1.02	1.23
Plant and Fermentation Air	2.96	3.63
CIP/CS	0.17	0.30
BUILDINGS		1.59
SITE DEVELOPMENT		3.58
ADDITIONAL PIPING		1.79
Total	**38.27**	**58.51**
Total Equipment Cost	**56.53**	**86.32**
Proratable Costs		8.63
Field Expenses		8.63
Home Office Construction and Fee		21.58
Contingency		2.59
Total Fixed Capital Investment		**127.76**
Owner's Cost		12.78
Total Capital Investment		**140.53**

OUTPUT BY SECTION

PLANT AREA		Chem Systems BASE EQUIPMENT COST ($)	Chem Systems INSTALLED EQUIPMENT COST ($)
	100 WOOD HANDLING		
pp-101	Flume	10,496	14,695
GS-103	Magnetic Chip Cleaner	10,882	13,058
GM-101A/B/S	Front End Loaders	412,152	494,582
GS-101	Radial Stacking Conveyor	131,984	184,777
GS-102	Belt Conveyer	202,589	283,624
GS-104	Milled Chip Belt Conveyor	42,272	59,181
GY-101A/B/C/D	Wood Chip Unloader with Scale	166,594	199,913
GG-101A/B/C/D	Disk Refiner	1,500,000	1,950,000
	TOTAL($ MM)	**2.48**	**3.20**
	200 PREHYDROLYSIS		
GS-223	Lime Unloading Conveyor	19,022	26,631
T-201	Sulfuric Acid Storage	45,371	54,445
T-203	Blowdown Tank	36,337	43,605
T-206	Neutralization Reaction Tank	63,956	76,747
T-220*	Lime Slurry Tank	35,387	42,465
pp-201	Sulfuric Acid	3,900	7,799
pp-202	Hydrolyzate	68,163	95,429
pp-203A/S	Neutralized Hydrolyzate	109,305	153,027
pp-221*	Slurry Metering Pump	7,691	10,767
TT-220	Feed Cooler	127,403	267,547
GA-201	Line Mixer	222	267
GA-203	Blowdown Tank Agitator	19,629	23,555
GA-213	Neutralization Tank Agitator	29,497	35,396
GF-201	Desiccant Air Filter	1,057	1,480
MR-201/MR-202	Pre-Hydrolysis System (w/ plug screw feeder)	4,560,000	6,840,000
GS-226*	Rail Car weigh station	60,000	72,000
	TOTAL ($ MM)	**5.19**	**7.75**
	300 XYLOSE FERMENTATION		
	Seed Fermenters		
FM-305/10	Xylose Seed Fermenter	0	0
FM-305/10	Xylose Seed Fermenter	0	0
FM-305/10	Xylose Seed Fermenter	0	0
FM-305/10	Xylose Seed Fermenter	0	0
FM-305/10	Xylose Seed Fermenter	0	0
FM-305/10	Xylose Seed Fermenter	0	0
	Total ($ MM)	**0.00**	**0.00**
FM-303	**Xylose Fermenters**	**0.73**	**1.03**
	Remaining Equipment		
T-301	Seed Hold Tank	0	0
T-321	Base Tank	14,203	39,768
pp-303*	Xylose Fermenter Product Pump	98,832	138,365
TT-301A*	Water Cooler	29,567	62,091
COILS	Xylose Fermentation Coils	7,682	19,206
COILS	Xylose Seed Fermentation Coils	0	0
GA-301	Seed Hold Tank Agitator	0	0
GA-303A-H	Xylose Fermenter Agitator	139,152	166,982
GA-305	First Seed Vessel Agitator	0	0
GA-306	Second Seed Vessel Agitator	0	0
GA-307	Third Seed Vessel Agitator	0	0
GA-308	Fourth Seed Vessel Agitator	0	0
	Total ($ MM)	**0.29**	**0.43**
	TOTAL ($ MM)	**1.02**	**1.45**

	400 CELLULASE PRODUCTION		
	Seed Fermenters		
FM-401/4	Cellulase Seed Fermenter	70,710	98,994
FM-401/4	Cellulase Seed Fermenter	17,897	26,846
FM-401/4	Cellulase Seed Fermenter	3,702	5,553
FM-401/4	Cellulase Seed Fermenter	766	1,149
	Total ($ MM)	**0.09**	**0.13**
FM-400	**Cellulase Fermenter ($ MM)**	**0.25**	**0.41**
	Remaining Equipment		
T-400	Media Prep Tank	8,490	19,526
T-403A/B	Antifoam Tank	7,707	17,725
T-405	Sterile Feed Tank	79,361	111,105
T-410A/B	Cellulase Hold Tank	117,757	188,410
pp-401A/S	Feed	43,470	60,858
pp-403A/S	Fermenter Recycle	69,790	97,706
pp-411A/S	Prep Tank	2,416	6,764
pp-412	Cellulase Feed	13,329	18,661
TT-401A*	Water Cooler	310	651
TT-401B*	Water Cooler	78	163
TT-402A	Water Cooler	14,634	30,731
TT-402B*	Water Cooler	3,884	8,157
COILS	Cellulase Fermentation Coils	4,819	12,048
COILS	Cellulase Seed Fermentation Coils	29	73
GA-400	Prep Tank Agitator	5,483	6,580
GA-401A/B/C	Fermenter Agitator	127,403	152,884
GA-405	Feed Tank Agitator	64,827	77,792
GA-410	Hold Tank Agitator	49,988	59,986
GA-411	First Seed Vessel Agitator	54,623	65,548
GA-412	Second Seed Vessel Agitator	13,549	16,259
GA-413	Third Seed Vessel Agitator	4,406	5,287
	Total ($ MM)	**0.69**	**0.96**
	TOTAL ($ MM)	**1.03**	**1.50**
	500 SSF		
	Seed Fermenters		
FM-501/6	SSF Seed Fermenter (S.c.)	0	0
FM-501/6	SSF Seed Fermenter (S.c.)	0	0
FM-501/6	SSF Seed Fermenter (S.c.)	0	0
FM-501/6	SSF Seed Fermenter (S.c.)	0	0
FM-501/6	SSF Seed Fermenter (S.c.)	0	0
FM-501/6	SSF Seed Fermenter (S.c.)	0	0
	Total ($ MM)	**0.00**	**0.00**
FM-500	**SSF Fermenter ($ MM)**	**3.93**	**6.29**
	Remaining Equipment		
T-501A	Seed Hold Tank (S.c.)	0	0
pp-501*	SSF Seed Transfer Pump	0	0
pp-505	Beer Transfer	353,712	495,197
COILS	SSF Fermentation Coils	4,771	11,928
COILS	SSF Seed Fermentation Coils	0	0
GA-500A-AA	SSF Fermenter Agitator	447,273	536,728
GA-501A	Seed Hold Tank Agitator (S.c.)	0	0
GA-510A	First Seed Vessel Agitator (S.c.)	0	0
GA-511A	Second Seed Vessel Agitator (S.c.)	0	0
GA-512A	Third Seed Vessel Agitator (S.c.)	0	0
GA-513A	Fourth Seed Vessel Agitator (S.c.)	0	0
	Total ($ MM)	**0.81**	**1.04**
	TOTAL ($ MM)	**4.74**	**7.34**

600 ETHANOL RECOVERY

AS-602	**Rectification Column**	**0.00**	**0.00**
PSA-600	**PSA Package**	**1.57**	**1.96**
	Remaining Equipment		
AS-601	Beer Column	476,685	1,430,054
AS-640*	Vent Scrubber	159,887	479,662
T-601	Degasser Drum	43,374	60,723
T-602	Beer Column Reflux Drum	9,183	25,713
T-603	Fusel Oil Decanter	5,208	14,584
T-605	Rectification Column Reflux Drum	0	0
T-607*	Extraction Still Reflux Drum	9,183	25,713
T-630	Recycled Water Tank	23,590	54,258
pp-601	Beer Column Bottoms	82,244	115,141
pp-603	Beer Column Reflux	11,044	30,922
pp-604A/S	Wash Return	2,416	6,764
pp-605A/S	Fusel Oil	2,416	6,764
pp-607	Rectification Column Bottoms	0	0
pp-608	Rectification Column Reflux	0	0
pp-621	Ethanol Storage	2,066	5,785
pp-622	Bottoms to WWT	1,208	3,382
pp-631	Recycled Water	20,454	57,272
pp-632A/S	Sump	3,033	8,493
pp-641*	Vent Scrubber Return Ethanol	3,430	9,604
GS-611A/B	Sludge Screws	39,850	55,790
TT-607	Fusel Oil Cooler	1,222	2,567
TT-613	Mash Trim Heater	142,943	300,181
TT-615	Flash/Mash Exchanger	63,520	133,392
TT-616	Scrub/Flash Exchanger	23,864	50,113
TT-621	Beer Column Reboiler	174,677	366,822
TT-622	Beer Column Condenser	160,976	338,049
TT-623	Rectification Column O/H Condenser	0	0
TT-624	Beer Column O/H Trim. Condenser	0	0
TT-625	Beer Column Bottoms/Scrub Exchanger	4,150	8,714
TT-626	Rectification Column O/H Trim. Condenser	0	0
TT-627	Rectification Column Bottoms Trim Reboiler	0	0
TT-628	Beer Still Bottoms Trim Cooler	0	0
TT-629	Mash Beer Bottoms Exchanger	32,685	68,639
GC-609A/B/C	Centrifuge	713,340	927,342
FAN-640*	FAN	19,272	26,981
	Total ($ MM)	**2.23**	**4.61**
	TOTAL ($ MM)	**3.80**	**6.57**

700 OFF-SITE TANKAGE

T-701A/B	Ethanol Product Tank	669,242	936,938
T-703	Sulfuric Acid Storage Tank	119,564	143,477
T-704	Fire Water Tank	143,506	200,909
T-706A/B	NH3 Storage Tank	85,160	238,449
T-707	Antifoam Storage Tank	23,611	54,305
T-708	Diesel Fuel Tank	31,935	44,709
T-710	Gasoline Storage Tank	64,771	90,679
T-720	Corn Steep Liquor Tank	37,519	52,527
T-730*	Lime Slurry Storage Tank	112,590	135,108
pp-701A/B/S	Ethanol Export	13,535	37,898
pp-703A/S	Sulfuric Acid Transfer	8,492	16,983
pp-704A/S	Fire Water	17,897	50,111
pp-706A/S	NH3 Transfer	6,903	19,328
pp-707A/S	Antifoam Transfer	2,416	6,764
pp-708A/S	Diesel Fuel	3,284	9,195
pp-710A/S	Gasoline Blending	2,416	6,764
pp-720A/S	Corn Steep Liquor Transfer	8,079	16,158
GF-703	Desiccant Air Filter	41,004	57,405
	TOTAL ($ MM)	**1.39**	**2.12**

800 WASTE TREATMENT

MS-806	Offgas K.O. Suction Pot	12,349	28,402
MS-809	Offgas Knock Out Drum	12,349	28,402
MS-810	LP Vent Knock Out Drum	5,197	11,952
T-803	Equalization Tank	178,693	250,170
T-804	Anaerobic Reactor	921,473	1,290,063
T-807	Biotreater	1,115,417	1,561,583
800*	Pressure Swing Adsorption Oxygen Generator	494,974	593,969
pp-808A/S	Primary Heat Exchanger Influent Pump	3,315	9,283
pp-809A/S	Seconday Heat Exchanger Influent Pump	3,315	9,283
pp-813A*	Return Activated Sludge	6,729	13,459
pp-813B*	Waste Activated Sludge	4,848	9,697
pp-816A/S	Final Effluent	13,463	37,695
GS-801	Sludge Screws	27,217	38,103
new*	Bar Screens	55,363	66,436
TT-801	Offgas Cooler	14,681	30,829
TT-802	Feed Cooler(Primary Heat Exchanger)	51,518	108,188
TT-803A	Seconday Heat Exchanger A: Cooling Water	79,808	167,598
GC-801	Sludge Centrifuge	126,751	164,776
GO-806	Offgas Burner	19,805	23,766
GV-808	Secondary Clarifier	93,702	112,442
PB-810	Offgass Blower	73,575	103,005
PB-817A/S	LP Vent Blower	144,575	202,405
OSBL*	Equalization Tank Mixers	65,390	78,467
OSBL*	Nutrient Feed System	23,165	27,798
OSBL*	Anaerobic Mixers	331,077	397,292
OSBL*	Aeration Tank Mixers	108,361	130,033
OSBL*	Mist System and Backup Carbon	166,311	199,574
OSBL*	Biofilter	6,435	7,722
	TOTAL ($ MM)	4.16	5.70

MS-902	Blowdown Flash Drum	5,601	15,683
MS-903	Hydrazine Drum	5,589	8,383
MS-904	Condensate Surge Drum	25,010	70,029
T-930	Condensate Collection Tank	19,179	53,701
pp-906A/S	Blowdown	3,158	8,842
pp-907	Hydrazine Transfer	1,875	3,750
pp-909A/S	Dearator Feed	109,826	153,756
pp-910A/S	Condensate	10,818	30,290
GU-903A/B	Demineralizers	626,406	751,687
GU-904A/S	Condensate Polisher	203,246	243,896
GU-907	Hydrazine Addition Package	15,243	18,292
GU-908	Ammonia Addition Package	15,243	18,292
GU-909	Phosphate Addition Package	15,243	18,292
GV-906	Dearator	135,159	378,445
pp-908A/S	Boiler Feed Water	109,826	153,756
HB-901A	Steam Boiler	18,270,638	23,751,829
	Total ($ MM)	**19.57**	**25.68**
	Process Water		
GF-901	Sand Filter	40,243	56,340
T-901	Process Water Tank	53,866	75,413
T-905	Backwash Transfer Tank	24,712	56,838
pp-902A/S	Process Water Transfer	18,990	53,171
pp-903A/S	Process Water Circulating	27,080	75,823
pp-904A/B	Backwash Feed	22,920	64,175
pp-905A/B	Backwash Transfer	2,817	7,888
pp-913A/S	Well Water	14,337	40,144
	Total ($ MM)	**0.20**	**0.43**
	Turbogenerator		
pp-901A/S	Turbine Condensate	4,753	13,309
GZ-911	Turbo Generator	6,379,798	9,569,696
	Total ($ MM)	**6.38**	**9.58**
	Cooling Water		
GT-912	Cooling Tower System	2,401,356	2,881,627
	Total ($ MM)	**2.40**	**2.88**
PK-951	**Chilled Water Package.**	**1.02**	**1.23**
	Plant and Fermentation Air.		
MS-906	Plant Air Receiver	19,945	55,845
MS-907	Instrument Air Receiver	19,945	55,845
GY-910	Instrument Air Dryer	24,412	34,177
PC-911	Air Compressor	55,258	71,835
PK-950A/B/S	Air Compressor Package(fermentation)	2,842,089	3,410,507
	Total ($ MM)	**2.96**	**3.63**
	CIP/CS		
T-961	Cleaning Tank	24,434	56,199
T-960	Sterilization Tank	40,458	60,686
T-963	Sterile Rinse Water Tank	24,434	56,199
pp-960A/S	Supply	4,660	9,321
pp-965A/B/C/S	CIP/CS Sump	4,831	13,528
GA-960	Sterilization Tank Agitator	12,417	14,900
GA-961	Cleanig Tank Agitator	12,417	14,900
T-953	Sterile Water Tank	40,458	60,686
pp-953	Sterile Water	1,950	3,900
TT-953	Water Sterilizer	3,410	7,162
	Total ($ MM)	**0.17**	**0.30**
	TOTAL ($ MM)	**32.72**	**43.73**
TOTAL		**56.527978**	**79.36**

TABLE VI.C.1
PRICING BASIS
(dollars per metric ton, fourth quarter 1993)

Wood (dry)	46
Sulfuric acid	72
Lime	50
Ammonia	129
Corn steep liquor	243
Nutrients	273
Antifoam	573
Glucose	1,168
Gasoline	165
Diesel	156
Solids disposal	(20)
Catalyst and chemicals	6

The cost of production estimate is shown in Table VI.C.2. The net raw materials is estimated to be $208 per metric ton (62 cents per gallon). Utilities are estimated to provide a credit of about $33 per metric ton (10 cents per gallon). The total variable cost is $176 per metric ton (52 cents per gallon).

Adding in the direct fixed costs ($27 per metric ton) and allocated fixed costs ($21/per metric ton) gives a total cash cost of production of $222 per metric ton or 66 cents per gallon.

Adding in the annual capital charge (20 percent of total investment) almost doubles the production cost. The resulting cost of denatured ethanol is estimated to be $430 per metric ton or $1.27 per gallon.

CHEM SYSTEMS

FAX COVER SHEET **FROM 914 631 8851**

Date:	January 10, 1994	
Fax No:	(303) 231-~~[illegible]~~ 1352	
Company:	NREL	
To:	Cindy Riley	**CC:** AJN, DFB
From:	Jacques Pavlenyi	
Pages to Follow:	2	

Message:

Attached you will find our design for the flow between fermenters, valid for both xylose (area 300) and SSF (area 500).

It is our contention that a minimum of 18" height difference between successive fermenters is needed to allow for hydraulically unassisted flow. The attached sheet describes the reasoning behind this minimum. The following points bear notice:

1) A 14" pipe is desirable for the liquid flow rate; a larger pipe would decrease velocity to where flow is no longer turbulent, which may allow settling or other undesired flow regimes.

2) A minimum 6" clearance is necessary between a tank inlet and liquid level to prevent backflow or backup.

3) Looking at the plot plan, an equivalent pipe length of 320' is conservative. The attendant pressure drop of 0.138 psi/100' is also conservative, since I assumed water, and not a viscous mass. The cell mass and lignin would greatly increase fluid viscosity, which would make the pressure drop even higher.

The result is a MINIMUM 18" between successive fermenters, to provide enough gravity head for flow. The design value of 10" in the previous report is not sufficient, causing settling in pipes and, depending on initial design, no flow at all.

Admin. Assist.:

Chem Systems Inc
303 South Broadway Tarrytown NY 10591-5487
Telephone: (914) 631-2828 Telex: 221844 Facsimile: (914) 631-8851

Gravity flow would be acceptable for xylose fermentation, only because there are 7 fermenters; the first fermenter would be 10.5 feet higher than the last. For SSF, this would mean the first would be 40.5 feet higher than the first, requiring excessive architectural costs, as well as an extra 18 psi delta P on the first feed pump.

It is recommended that we replace gravity feed in the SSF with booster pumps every 6 fermenters, which would greatly diminish unnecessary architectural costs for fermenter elevating.

Please review the attached assumptions and conclusions, and let us know if and how you differ with any part of these. As is stands, the present setup will work, but at excessive construction costs, as well as a 120' SSF structure.

Sincerely;

Jacques Pavlenyi

Jacques Pavlenyi
Consultant

cc: Alan Nizamoff
Don Bari

CHEMSTATIONS

Engineering Software

CUSTOMER NREL

PROJECT 7951: BIOMASS TO ETHANOL

PAGE 3 OF 3

DATE 1/10/93

BY JJP

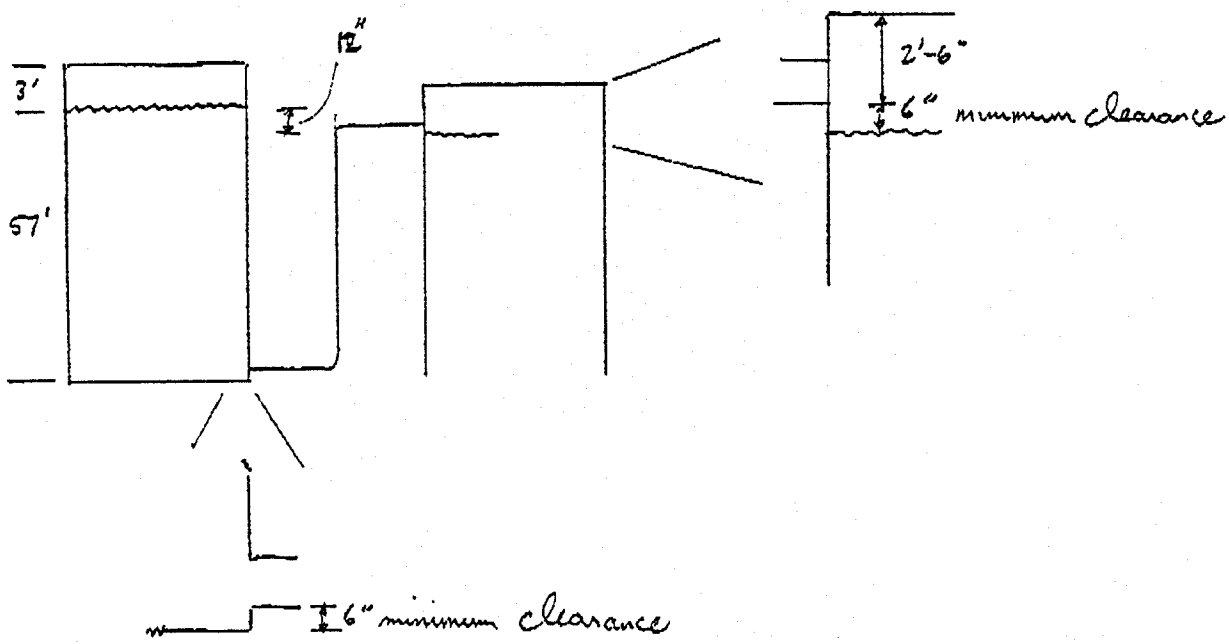

Pressure drop in pipe: 100 kg/s H_2O (~1600 gpm)

linear feet = 100'

90° bends : 4 @ 12' equivalent length each

inlet : 1 @ 40' equivalent length

outlet 1 @ 75' equivalent length

263' × 20% design factor

320' equivalent length

for 14" pipe, sch 40, $\Delta p = \frac{0.138 \text{ psi}}{100'} = \frac{0.318'}{100'} = \frac{3.82" \text{ water}}{100'}$

Head loss $= \left(\frac{320}{100}\right)(3.82) = 12.2"$

add 6" for clearance: **18"**

CHEM SYSTEMS

FAX COVER SHEET **FROM 914 631 8851**

Date:	April 22, 1994
Fax No:	303-231-1352
Company:	**NREL**
To:	Vicky Putsche
From:	Alan J. Nizamoff
Pages to Follow:	11

CC: DFB

Engineering Reports used in the most Recent Analysis

Message:

In answer to Cindy's FAX dated April 21, 1994, we can supply the following:

1. I am sending the tray by tray liquid and vapor composition profiles under separate cover.

2. The presence of oxygen as a byproduct of anaerobic biotreatment is required in order to close the material balance. With the several components (namely glycerol, acetaldehyde, fusel oils, cellulase and soluble solids) there is an oxygen excess which unless accounted for in the reaction stoichiometry will result in an open material balance, preventing the simulator from converging.

   In the anaerobic treatment of wastewater, there are two distinct steps occurring. The primary stage is the degradation of higher organics to primary organic acids, namely acetic, propionic and n-butyric acid. A multitude of mixed bacteria are responsible for this first and fastest step. The final step is methanation, where purely anaerobic bacteria convert the organic acids into methane, carbon dioxide and short organic acids.

   Chem Systems was not supplied with any data on acid production within the anaerobic area. However, NREL supplied the assumption that only biogass was a product of the degradation, implying a methanation efficiency of 100 percent. The results in the need to account for excess oxygen in the feed in methods other than dissolved acids.

Admin. Assist.: LTM

Chem Systems Inc
303 South Broadway Tarrytown NY 10591-5487
Telephone: (914) 631-2828 Telex: 221844 Facsimile: (914) 631-8851

Fax to Vicky Putsche
4/22/94

While it is agreed, in general, that oxygen production is minimal, unless production conversions to acetic and longer-chain acids can be provided, the fastest solution is to account for excess oxygen as molecular. Until better data can be supplied for the acidulation step and methanation conversion efficiency, this is necessary to complete the component material balance.

3. Decreasing the residence time in the anaerobic digestors was based on information Cindy provided in our meeting on March 9th.

4. FAX to Cindy Riley dated April 1, 1994, contained this information, as well as our most recent estimate of the cost of production. I have attached a copy herein.

5. A more detailed explanation is provided below for the specific items Cindy mentioned in her FAX.

   1) buildings

      This includes an office and administrative building, laboratory, change house and cafeteria, guard house, garage, maintenance shop and warehouse.

   2) site development

      Included in the site development costs are fencing, curbing, parking lot, roads, wells, drainage, rail system, soil borings and general pavings. The above factor allows for minimum site development assuming a clear site, no unusual problems such as right of ways, difficult land clearing or unusual environmental problems. (Since we expect that the Ethanol facilities will be located in a treed area as opposed to a cleared site, we employed the maximum value as noted below.)

   3) additional piping

      This includes piping required for a flare system, instrument and plant air, process water, fire water loop, inert gas, process area tie-ins and interconnecting piping within the storage area.

   4) prorateable costs

      This includes fringe benefits, burdens, and insurance.

Fax to Vicky Putsche
4/22/94

5) field expenses

This includes consumables, small tool equipment rental, field services, temporary construction facilities, and field construction supervision.

6) home office construction and fee

This includes engineering plus incidentals, purchasing, and construction management.

The values used for the NREL cost estimate are based on Chem Systems' previous experience with different projects over the past several years. The ranges and values used for this project are presented below:

	Percentage of ISBL		
	Min	Max	Value Used
buildings	3	5	4
site development	3	9	9
additional piping	3	6	4.5
prorateable costs	4	11	10
field expenses	5	13	10
home office const. and fee	15	30	25

Please let me know if we can be of further assistance. We look forward to the results of your review by May 13.

Regards,

Alan Nizamoff

To: Vicky Putsche

CHEM SYSTEMS

FAX COVER SHEET **FROM 914 631 8851**

Date:	April 1, 1994	
Fax No:	303-231-1352	
Company:	**NREL**	
To:	Cynthia Riley	**CC:** DFB
From:	Alan J. Nizamoff	
Pages to Follow:	Eight (8)	

Message:

Attached are the capital estimates and cost of production estimates corresponding to the re-engineered base case material balance sent to you in March. We have incorporated all vendor quotes in this latest estimate, as well as adjusted other items per our meeting on March 9 (e.g., wastewater treatment residence times). We are waiting for your endorsement of these results before proceeding with the sensitivity cases.

Admin. Assist.: Gina L. Resta

Chem Systems Inc
303 South Broadway Tarrytown NY 10591-5487
Telephone: (914) 631-2828 Telex: 221844 Facsimile: (914) 631-8851

EQUIPMENT COST BY SECTION

	PLANT AREA	1990 NREL	Chem Systems BASE EQUIPMENT COST ($ MM)	INSTALLED EQUIPMENT COST ($ MM)
ISBL				
100	WOOD HANDLING	2.51	2.48	3.20
200	PREHYDROLYSIS	8.31	5.17	7.72
300	XYLOSE FERMENTATION	2.16	2.36	3.28
400	CELLULASE PRODUCTION	0.97	1.02	1.47
500	SSF	7.36	10.86	16.79
600	ETHANOL RECOVERY	1.45	2.34	5.07
	Total		**24.22**	**37.54**
OSBL				
700	OFF-SITE TANKAGE	1.44	1.34	2.04
800	WASTE TREATMENT	1.39	11.90	15.24
900	UTILITIES			
	Boiler Feed Water and Boiler Package	21.1	20.64	30.94
	Process Water	0.32	0.21	0.45
	Turbogenerator	6.50	9.88	14.82
	Cooling Water	0.92	2.60	3.39
	Chilled Water Package	~~0.60~~	2.79	3.35
	Plant and Fermentation Air	1.82	4.58	5.58
	CIP/CS		0.17	0.30
	BUILDINGS			1.50
	SITE DEVELOPMENT			3.38
	ADDITIONAL PIPING			1.69
	Total		**54.11**	**82.66**
	Total Equipment Cost		**78.33**	**120.20**
	Proratable Costs			12.02
	Field Expenses			12.02
	Home Office Construction and Fee			30.05
	Contingency			12.02
	Total Fixed Capital Investment			**186.31**
	Owner's Cost			18.63
	Total Capital Investment			**204.94**

Installed Equipment

Field erected

Installation Factor = $\frac{186.31}{78.35} = 2.38$

$\frac{186.31}{52.69} = 3.23$

EQUIPMENT COST BY SECTION

SERI VS. CHEM SYSTEMS

	PLANT AREA	SERI BASE EQUIPMENT COST ($ MM)	*Chem Systems* BASE EQUIPMENT COST ($ MM)
ISBL			
100	WOOD HANDLING	2.51	2.48
200	PREHYDROLYSIS	8.31	5.17
300	XYLOSE FERMENTATION	2.16	2.36
400	CELLULASE PRODUCTION	0.97	1.02
500	SSF	7.36	10.86
600	ETHANOL RECOVERY	1.4	2.34
	Total	**22.71**	**24.22**
OSBL			
700	OFF-SITE TANKAGE	1.44	1.34
800	WASTE TREATMENT	1.39	11.90
900	UTILITIES	11.68	21.52
	BOILER PACKAGE (Installed)	19.82	29.03
	MISCELLANEOUS	2.52	6.57
	Total	**36.85**	**70.36**
	Total Equipment Cost w/ Boiler Installed	**59.56**	**94.58**

OUTPUT BY SECTION

PLANT AREA		Chem Systems BASE EQUIPMENT COST ($)	INSTALLED EQUIPMENT COST ($)
100	WOOD HANDLING		
pp-101	Flume	9,703	13,584
GS-103	Magnetic Chip Cleaner	10,882	13,056
GM-101A/B/S	Front End Loaders	412,152	494,582
GS-101	Radial Stacking Conveyor	131,984	184,777
GS-102	Belt Conveyor	202,589	283,624
GS-104	Milled Chip Belt Conveyor	42,272	59,181
GY-101A/B/C/D	Wood Chip Unloader with Scale	166,594	199,913
GG-101A/B/C/D	Disk Refiner	1,500,000	1,950,000
	TOTAL($ MM)	2.48	3.20
200	PREHYDROLYSIS		
GS-223	Lime Unloading Conveyor	19,022	26,631
T-201	Sulfuric Acid Storage	45,371	54,445
T-203	Blowdown Tank	36,337	43,605
T-206	Neutralization Reaction Tank	62,046	74,455
T-220*	Lime Slurry Tank	35,314	42,377
pp-201	Sulfuric Acid	3,900	7,799
pp-202	Hydrolyzate	65,037	91,052
pp-203A/S	Neutralized Hydrolyzate	104,285	145,999
pp-221*	Slurry Metering Pump	7,109	9,953
TT-220	Feed Cooler	121,464	255,074
GA-201	Line Mixer	222	266
GA-203	Blowdown Tank Agitator	19,629	23,555
GA-213	Neutralization Tank Agitator	28,746	34,495
GF-201	Desiccant Air Filter	1,057	1,480
MR-201/MR-202	Pre-Hydrolysis System (w/ plug screw feeder)	4,560,000	6,840,000
GS-226*	Rail Car weigh station	60,000	72,000
	TOTAL ($ MM)	5.17	7.72
300	XYLOSE FERMENTATION		
	Seed Fermenters		
FM-305/10	Xylose Seed Fermenter	100,698	140,978
FM-305/10	Xylose Seed Fermenter	35,530	49,742
FM-305/10	Xylose Seed Fermenter	13,371	30,752
FM-305/10	Xylose Seed Fermenter	4,377	10,066
FM-305/10	Xylose Seed Fermenter	1,433	3,295
FM-305/10	Xylose Seed Fermenter	469	1,079
	Total ($ MM)	0.16	0.24
FM-303	Xylose Fermenters	1.47	2.06
	Remaining Equipment		
T-301	Seed Hold Tank	100,698	140,978
T-321	Base Tank	14,186	39,722
pp-303*	Xylose Fermenter Product Pump	94,502	132,303
TT-301A*	Water Cooler	30,544	64,143
COILS	Xylose Fermentation Coils	15,089	37,722
COILS	Xylose Seed Fermentation Coils	2,011	5,027
GA-301	Seed Hold Tank Agitator	31,529	37,834
GA-303A-H	Xylose Fermenter Agitator	360,915	433,098
GA-305	First Seed Vessel Agitator	44,456	53,347
GA-306	Second Seed Vessel Agitator	28,304	33,965
GA-307	Third Seed Vessel Agitator	9,069	10,883
GA-308	Fourth Seed Vessel Agitator	3,824	4,589
	Total ($ MM)	0.74	0.99
	TOTAL ($ MM)	2.36	3.28

OUTPUT BY SECTION

PLANT AREA		Chem Systems BASE EQUIPMENT COST ($)	INSTALLED EQUIPMENT COST ($)
400	**CELLULASE PRODUCTION**		
	Seed Fermenters		
FM-401/4	Cellulase Seed Fermenter	68,696	96,174
FM-401/4	Cellulase Seed Fermenter	17,261	25,891
FM-401/4	Cellulase Seed Fermenter	3,570	5,356
FM-401/4	Cellulase Seed Fermenter	739	1,108
	Total ($ MM)	**0.09**	**0.13**
FM-400	**Cellulase Fermenter ($ MM)**	**0.25**	**0.41**
	Remaining Equipment		
T-400	Media Prep Tank	8,490	19,526
T-403A/B	Antifoam Tank	7,454	17,143
T-405	Sterile Feed Tank	76,014	106,420
T-410A/B	Cellulase Hold Tank	114,401	183,042
pp-401A/S	Feed	43,470	60,858
pp-403A/S	Fermenter Recycle	69,790	97,706
pp-411A/S	Prep Tank	2,416	6,764
pp-412	Cellulase Feed	13,096	18,334
TT-401A*	Water Cooler	321	673
TT-401B*	Water Cooler	78	163
TT-402A	Water Cooler	15,097	31,703
TT-402B*	Water Cooler	3,698	7,765
COILS	Cellulase Fermentation Coils	4,651	11,627
COILS	Cellulase Seed Fermentation Coils	29	73
GA-400	Prep Tank Agitator	5,483	6,580
GA-401A/B/C	Fermenter Agitator	127,403	152,884
GA-405	Feed Tank Agitator	63,175	75,810
GA-410	Hold Tank Agitator	48,715	58,457
GA-411	First Seed Vessel Agitator	53,231	63,878
GA-412	Second Seed Vessel Agitator	13,204	15,845
GA-413	Third Seed Vessel Agitator	4,294	5,152
	Total ($ MM)	**0.67**	**0.94**
	TOTAL ($ MM)	**1.02**	**1.47**
500	**SSF**		
	Seed Fermenters		
FM-501/6	SSF Seed Fermenter (S.c.)	242,888	388,620
FM-501/6	SSF Seed Fermenter (S.c.)	68,298	109,277
FM-501/6	SSF Seed Fermenter (S.c.)	25,966	59,723
FM-501/6	SSF Seed Fermenter (S.c.)	8,706	13,059
FM-501/6	SSF Seed Fermenter (S.c.)	2,593	3,890
FM-501/6	SSF Seed Fermenter (S.c.)	772	1,159
	Total ($ MM)	**0.35**	**0.59**
FM-500	**SSF Fermenter ($ MM)**	**8.57**	**13.71**
	Remaining Equipment		
T-501A	Seed Hold Tank (S.c.)	242,888	388,620
pp-501*	SSF Seed Transfer Pump	57,908	81,072
pp-505	Beer Transfer	230,252	322,353
COILS	SSF Fermentation Coils	14,148	35,368
COILS	SSF Seed Fermentation Coils	2,590	6,476
GA-500A-AA	SSF Fermenter Agitator	1,263,201	1,515,842
GA-501A	Seed Hold Tank Agitator (S.c.)	39,859	47,831
GA-510A	First Seed Vessel Agitator (S.c.)	56,202	67,443
GA-511A	Second Seed Vessel Agitator (S.c.)	23,700	28,440
GA-512A	Third Seed Vessel Agitator (S.c.)	7,594	9,113
GA-513A	Fourth Seed Vessel Agitator (S.c.)	3,202	3,843
	Total ($ MM)	**1.94**	**2.51**
	TOTAL ($ MM)	**10.86**	**16.79**

OUTPUT BY SECTION

PLANT AREA		Chem Systems BASE EQUIPMENT COST ($)	INSTALLED EQUIPMENT COST ($)
600	**ETHANOL RECOVERY**		
AS-602	**Rectification Column**	**0.37**	**1.10**
	Remaining Equipment		
AS-601	Beer Column	288,032	864,096
AS-603*	Stripping Still	97,763	293,289
AS-640*	Vent Scrubber	105,815	317,446
T-601	Degasser Drum	42,464	59,449
T-602	Beer Column Reflux Drum	9,183	25,713
T-603	Fusel Oil Decanter	5,052	14,145
T-605	Rectification Column Reflux Drum	9,183	25,713
T-607*	Extraction Still Reflux Drum	9,183	25,713
T-630	Recycled Water Tank	22,815	52,475
pp-601	Beer Column Bottoms	78,367	109,714
pp-603	Beer Column Reflux	10,663	29,856
pp-604A/S	Wash Return	2,416	6,764
pp-605A/S	Fusel Oil	2,416	6,764
pp-607	Rectification Column Bottoms	2,856	7,998
pp-608	Rectification Column Reflux	19,737	55,263
pp-610*	Stripping Still Reflux	11,469	32,114
pp-611*	Stripping Still Bottoms	5,060	14,169
pp-631	Recycled Water	19,750	55,299
pp-632A/S	Sump	3,033	8,493
pp-641*	Vent Scrubber Return Ethanol	3,361	9,410
GS-611A/B	Sludge Screws	39,850	55,790
TT-603	Beer Column Reboiler	94,731	198,936
TT-605	Beer Column Condenser	83,144	174,603
TT-607	Fusel Oil Cooler	1,173	2,463
TT-609	Rectification Column Reboiler	55,369	116,275
TT-610	Rectification Column Condenser	53,960	113,315
TT-632*	Stripping Still Reboiler	25,069	52,645
TT-631*	Stripping Still Condenser	88,465	185,777
TT-613	Feed Preheater	21,263	44,653
TT-615	Feed Cross Exchanger	27,361	57,457
GC-609A/B/C	Centrifuge	713,340	927,342
FAN-640*	FAN	19,272	26,981
	Total ($ MM)	**1.97**	**3.97**
	TOTAL ($ MM)	**2.34**	**5.07**
700	**OFF-SITE TANKAGE**		
T-701A/B	Ethanol Product Tank	622,743	871,840
T-703	Sulfuric Acid Storage Tank	119,564	143,477
T-704	Fire Water Tank	143,506	200,909
T-706A/B	NH3 Storage Tank	85,023	238,065
T-707	Antifoam Storage Tank	22,836	52,522
T-708	Diesel Fuel Tank	31,935	44,709
T-710	Gasoline Storage Tank	60,270	84,379
T-720	Corn Steep Liquor Tank	37,519	52,527
T-730*	Lime Slurry Storage Tank	112,260	134,712
pp-701A/B/S	Ethanol Export	13,535	37,898
pp-703A/S	Sulfuric Acid Transfer	8,492	16,983
pp-704A/S	Fire Water	17,897	50,111
pp-706A/S	NH3 Transfer	6,903	19,328
pp-707A/S	Antifoam Transfer	2,416	6,764
pp-708A/S	Diesel Fuel	3,284	9,195
pp-710A/S	Gasoline Blending	2,416	6,764
pp-720A/S	Corn Steep Liquor Transfer	8,079	16,158
GF-703	Desiccant Air Filter	41,004	57,405
	TOTAL ($ MM)	**1.34**	**2.04**

$0.134 mm for stripping still ~7%

OUTPUT BY SECTION

PLANT AREA		Chem Systems BASE EQUIPMENT COST ($)	INSTALLED EQUIPMENT COST ($)
800	WASTE TREATMENT		
MS-805	Reactor Surge Drum	29,449	67,733
MS-806	Offgas K.O. Suction Pot	13,179	30,311
MS-809	Offgas Knock Out Drum	13,179	30,311
MS-810	LP Vent Knock Out Drum	5,546	12,755
T-803	Equalization Tank	173,540	242,956
T-804	Anaerobic Reactor	850,000	1,190,000
T-807	Biotreater	1,609,631	2,253,484
800 ?*	Pressure Swing Adsorption Oxygen Generator	6,880,000	8,256,000
800 ?*	Sludge Storage Tank	511,429	716,000
pp-808A/S	Primary Heat Exchanger Influent Pump	3,538	9,907
pp-809A/S	Secondary Heat Exchanger Influent Pump	3,538	9,907
pp-813A*	Return Activated Sludge	7,182	14,363
pp-813B*	Waste Activated Sludge	5,174	10,348
pp-816A/S	Final Effluent	14,368	40,229
GS-801	Sludge Screws	29,046	40,664
new*	Bar Screens	147,712	177,254
TT-801	Offgas Cooler	15,667	32,901
TT-802	Feed Cooler(Primary Heat Exchanger)	32,241	67,706
TT-803A	Secondary Heat Exchanger A: Cooling Water	68,257	143,340
TT-803B*	Secondary Heat Exchanger B: Chilled Water	52,357	109,951
GC-801	Sludge Centrifuge	135,270	175,852
GO-806	Offgas Burner	21,136	25,363
GV-808	Secondary Clarifier	150,000	180,000
PB-810	Offgass Blower	78,520	109,928
PB-817A/S	LP Vent Blower	154,293	216,010
OSBL*	Equalization Tank Mixers	65,951	79,142
OSBL*	Nutrient Feed System	45,118	54,141
OSBL*	Anaerobic Mixers	235,554	282,664
OSBL*	Mist System and Backup Carbon	323,921	388,706
OSBL*	Biofilter	12,533	15,039
OSBL*	Storage Tank Mixers	211,465	253,758
	TOTAL ($ MM)	11.90	15.24

1.4

1.2

OUTPUT BY SECTION

PLANT AREA		Chem Systems BASE EQUIPMENT COST ($)	INSTALLED EQUIPMENT COST ($)
900	UTILITIES		
	Boiler Feed Water		
MS-902	Blowdown Flash Drum	5,825	16,309
MS-903	Hydrazine Drum	5,812	8,718
MS-904	Condensate Surge Drum	26,009	72,825
T-930	Condensate Collection Tank	50,231	80,369
pp-906A/S	Blowdown	3,264	9,195
pp-907	Hydrazine Transfer	1,950	3,900
pp-909A/S	Dearator Feed	11,250	31,499
pp-910A/S	Condensate	13,845	38,767
GU-903A/B	Demineralizers	651,412	781,694
GU-904A/S	Condensate Polisher	211,360	253,632
GU-907	Hydrazine Addition Package	15,852	19,022
GU-908	Ammonia Addition Package	15,852	19,022
GU-909	Phosphate Addition Package	15,852	19,022
GV-906	Dearator	140,554	393,552
pp-908A/S	Boiler Feed Water	114,210	159,894
HB-901A	Steam Boiler	19,353,952	29,030,928
	Total ($ MM)	**20.64**	**30.94**
	Process Water		
GF-901	Sand Filter	41,849	58,589
T-901	Process Water Tank	56,179	78,650
T-905	Backwash Transfer Tank	25,699	59,107
pp-902A/S	Process Water Transfer	19,748	55,294
pp-903A/S	Process Water Circulating	28,161	78,850
pp-904A/B	Backwash Feed	23,835	66,737
pp-905A/B	Backwash Transfer	2,930	8,203
pp-913A/S	Well Water	14,910	41,747
	Total ($ MM)	**0.21**	**0.45**
	Turbogenerator		
pp-901A/S	Turbine Condensate	4,841	13,554
GZ-911	Turbo Generator	9,873,873	14,810,809
	Total ($ MM)	**9.88**	**14.82**
	Cooling Water		
pp-912A-F/S	Cooling Water pumps	163,792	458,617
GT-912	Cooling Tower System	2,438,848	2,926,617
	Total ($ MM)	**2.60**	**3.39**
PK-951	**Chilled Water Package**	**2.79**	**3.35**
	Plant and Fermentation Air		
MS-906	Plant Air Receiver	19,945	55,845
MS-907	Instrument Air Receiver	19,945	55,845
GY-910	Instrument Air Dryer	24,412	34,177
PC-911	Air Compressor	55,258	71,835
PK-950A/B/S	Air Compressor Package(fermentation)	4,464,603	5,357,523
	Total ($ MM)	**4.58**	**5.58**
	CIP/CS		
T-961	Cleaning Tank	24,434	56,199
T-960	Sterilization Tank	40,458	60,686
T-963	Sterile Rinse Water Tank	24,434	56,199
pp-960A/S	Supply	4,660	9,321
pp-965A/B/C/S	CIP/CS Sump	4,831	13,528
GA-960	Sterilization Tank Agitator	12,417	14,900
GA-961	Cleanig Tank Agitator	12,417	14,900
T-953	Sterile Water Tank	40,458	60,686
pp-953	Sterile Water	1,950	3,900
TT-953	Water Sterilizer	3,410	7,162
	Total ($ MM)	**0.17**	**0.30**
	TOTAL ($ MM)	**40.87**	**58.81**
TOTAL		**78.33**	**113.63**

TABLE 1
COST OF PRODUCTION ESTIMATE FOR:ETHANOL
PROCESS:BIOMASS PER CSI

Plant start-up	4Q93
Analysis date	4Q93
Location	SE US
Capacity	159.3 Thousand MT/yr
	54.0 Millions gallons per year
Operating rate	100 percent
Throughput	159.3 Thousand MT/yr

CAPITAL COST	MILLION U.S. $
ISBL	58.2
OSBL	128.1
Total Plant Capital	186.3
Other Project Costs	18.6
Total Capital Investment	204.9
Working capital	13.2

PRODUCTION COST SUMMARY		UNITS Per MT Product	PRICE U.S. $ /Unit	U.S. $ Per MT	ANNUAL COST MM U.S. $	U.S. $ Per Gal
RAW MATERIALS	Wood (dry), MT	3.4613	46	160.244	25.53	
	Sulfuric Acid, MT	0.0551	72	3.947	0.63	
	Lime, MT	0.0416	50	2.063	0.33	
	Ammonia, MT	0.0374	129	4.829	0.77	
	Corn steep liquor, MT	0.0095	243	2.304	0.37	
	Nutrients, MT	0.0215	273	5.868	0.93	
	Antifoam, MT	0.0006	573	0.344	0.05	
	Glucose, MT	0.0083	1,168	9.698	1.55	
	Gasoline, MT	0.0500	165	8.245	1.31	
	Diesel, MT	0.0135	156	2.108	0.34	
	Catalyst & Chemicals		22	22.046	3.51	
	TOTAL RAW MATERIALS			221.697	35.32	0.65
BY-PRODUCT CREDITS	Solids Disposal, MT	0.15635	(20)	3.127	0.50	
	TOTAL BY-PRODUCT CREDITS			3.127	0.50	0.01
NET RAW MATERIALS				224.824	35.82	0.66
UTILITIES	Purchased Power, MWH	-0.25422	42	(10.677)	(1.70)	
	Raw water, MT	30.99803	0	0.819	0.13	
	TOTAL UTILITIES			(9.858)	(1.57)	(0.03)
VARIABLE COST				214.966	34.25	0.63
DIRECT FIXED COSTS	Labor, 41 Men	32.70 Thousand U.S. $		8.415	1.34	
	Foremen, 9 Men	37.10 Thousand U.S. $		2.096	0.33	
	Super., 1 Men	44.80 Thousand U.S. $		0.281	0.04	
	Maint., Material & Labor	3.00 % of ISBL		10.956	1.75	
	Direct Overhead	45 % Labor & Supervision		4.856	0.77	
	TOTAL DIRECT FIXED COSTS			26.604	4.24	0.08
ALLOCATED FIXED COSTS	General Plant Overhead	65 % Labor & Maintenance		14.136	2.25	
	Insurance, Property Tax	0.7 % Total Plant Capital		8.185	1.30	
	TOTAL ALLOCATED FIXED COSTS			22.321	3.56	0.07
TOTAL CASH COST				263.891	42.05	0.78
Annual Capital Charge		20 % total capital investment		257.257	40.99	
Cost of denatured ethanol				521.148	83.03	1.54

3-31-94, PROCESS : BIOMASS1, PRICE : NREL1Q94, JOB : 7951