Biomass to Ethanol Process Evaluation

A report prepared for
National Renewable Energy Laboratory
December 1994

CHEM SYSTEMS

Chem Systems Inc.
303 South Broadway
Tarrytown, New York 10591
Telephone: (914) 631-2828 Telex: 221844 Facsimile (914) 631-8851

TABLE OF CONTENTS

		Page
I	**EXECUTIVE SUMMARY**	I - 1
II	**INTRODUCTION**	II - 1
	A. BACKGROUND	II - 1
	B. ISSUES AND OBJECTIVES	II - 2
	C. METHODOLOGY	II - 3
	1. Process Configuration (Section III)	II - 3
	2. Process Simulation (Section IV)	II - 3
	3. Equipment Sizing (Section V)	II - 4
	4. Cost Model (Section VI)	II - 4
	5. Sensitivity Analysis (Section VII)	II - 4
III	**PROCESS DESIGN**	III - 1
	A. BASE CASE	III - 1
	B. CHANGES TO THE SERI BASE CASE	III - 4
	1. Process	III - 4
	(a) Changes to SERI Design Basis	III - 4
	(1) Wood Composition	III - 4
	(2) Cellulose Fermentation Inoculum	III - 6
	(3) Xylose Ammonia Requirements	III - 6
	(4) Lignan Concentration	III - 6
	(b) Design Basis Data	III - 6
	2. Engineering	III - 7
	(a) Soaking vs. Wash of Wood Feed	III - 7
	(b) Cooling Water Approach Temperature	III - 7
	(c) Addition of Water Scrubber	III - 8
	(d) Improved Ethanol Purification	III - 9
	(e) Water Balance Optimization	III - 9
	(f) Materials of Construction	III - 10
	(g) Lime Handling	III - 10
	(h) Heat Integration/Optimization	III - 11
	(i) Impregnator Design	III - 11
	(j) Gypsum Plating	III - 11
	(k) Size of Fermentation Tanks and Mixing Requirements	III - 12
	(l) Wood Handling and Pumping	III - 12
	C. PROCESS DESCRIPTIONS: ISBL	III - 13

TABLE OF CONTENTS
(Continued)

		Page
	1. Feedstock Composition Basis	III - 13
	2. Wood Handling	III - 13
	3. Prehydrolysis	III - 15
	4. Neutralization	III - 17
	5. Xylose Fermentation	III - 18
	6. Cellulase Production	III - 21
	7. Simultaneous Saccharification and Fermentation (SSF)	III - 23
	8. Distillation and Recovery	III - 26
	D. PROCESS DESCRIPTION: OSBL	III - 30
	1. Tank Farm: Area 800	III - 30
	2. Wastewater Treatment: Area 800	III - 31
	3. Utilities: Area 900	III - 32
	(a) Co-Generation System	III - 32
	(b) Cooling Water	III - 34
	(c) Chilled Water	III - 34
	(d) Plant and Instrument Air	III - 34
	(e) Sterile Air	III - 34
	(f) Process Water	III - 35
	(g) Clean In Place and Chemical Sterilization System (CIP/CS)	III - 35
IV	**BASIS OF SIMULATION MODEL DESIGN**	IV - 1
	A. SIMULATION SYSTEM	IV - 1
	B. PROCESS MODEL	IV - 2
	1. Model Architecture	IV - 2
	2. Base Data	IV - 3
	3. Reactors	IV - 4
	4. Agitators	IV - 5
	C. AREA DESCRIPTIONS	IV - 6
	1. Area 100	IV - 6
	2. Area 200	IV - 8
	(a) BESSF-210: Prehydrolysis	IV - 8
	(b) BESSF-220: Hydrolyzate Neutralization	IV - 9
	3. Area 300: Xylose Fermentation	IV - 10
	(a) BESSF-310A: Xylose Seed Fermentation	IV - 10

TABLE OF CONTENTS
(Continued)

		Page
	(b) BESSF-310B: Xylose Fermentation	IV - 14
	4. Area 400: Cellulase Production	IV - 16
	(a) BESSF-410A: Cellulase Seed Fermenters	IV - 16
	(b) BESSF-410B: Cellulase Production	IV - 18
	5. Area 500: Simultaneous Saccharification and Fermentation (SSF)	IV - 20
	(a) BESSF-510A: SSF Seed Fermentation	IV - 20
	(b) BESSF-510B: SSF	IV - 22
	6. Area 600: Ethanol Purification	IV - 24
	(a) BESSF-610: Degasser	IV - 24
	(b) BESSF-620: Ethanol Distillation	IV - 26
	(c) BESSF-630: Lignin Separation	IV - 29
	(d) BESSF-640: Vent Scrubber	IV - 31
	7. Area 700: Tank Farm	IV - 31
	8. Area 800: Wastewater Treatment	IV - 31
	(a) BESSF-810: Wastewater Treatment, Anaerobic Biotreatment	IV - 31
	(b) BESSF-820: Wastewater Treatment, Aerobic Biotreatment	IV - 35
	(c) BESSF-821: Boiler Fuels	IV - 36
	9. Area 900: Steam Boiler/Turbogenerator	IV - 36
V	**EQUIPMENT SIZING**	V - 1
	A. TANKS	V - 1
	B. COLUMNS	V - 3
	C. HEAT EXCHANGERS	V - 4
	D. PUMPS	V - 5
	E. MISCELLANEOUS EQUIPMENT	V - 6
	F. UTILITIES	V - 7
VI	**COST MODEL**	VI - 1
	A. COST ESTIMATE	VI - 1
	1. Basis	VI - 1
	(a) Purchased Equipment Costs	VI - 1
	(b) Erection Costs	VI - 3

TABLE OF CONTENTS
(Continued)

	Page
(c) Indirect Costs	VI - 4
(d) Other Project Costs	VI - 4
2. Results	VI - 5
B. COST ALGORITHMS	VI - 7
C. COST OF PRODUCTION	VI - 8
REFERENCES/BIBLIOGRAPHY	1

I EXECUTIVE SUMMARY

Chem Systems has been commissioned to perform a technical and economic evaluation of the plant design described in the SERI draft report entitled "Technical and Economic Analysis of an Enzymatic Hydrolysis Based Ethanol Plant" dated 1991. In addition Chem Systems has been asked to examine the effect of selected process improvements on the cost of production of ethanol. It has been assumed that these improvements could be attained through R&D on the feedstock and the conversion process and through operational experience on scaled-up processes. The 1991 SERI analysis determined a base case product cost of $1.27 per gallon of ethanol product, and a target product cost of $0.67 per gallon.

Using the SERI report as a basis and starting point, Chem Systems developed a heat and material balance for the wood-to-ethanol process using its own process and engineering design experience and a process simulator computer software program licensed to Chem Systems. This program also generated most of the equipment size specifications. The design basis parameters included data on feedstock composition, as well as yield, operating conditions and material balance for prehydrolysis and hydrolysis reaction, fermentation, and enzyme production. Based on a 580 thousand metric tons per year (160,000 pounds per hour) of wood (dry) feed rate at a 1993 southeast US location, investment capital (both inside and outside battery limits) and production costs have been estimated.

To improve the usefulness and accuracy of the model as a tool for carrying out sensitivities, Chem Systems has developed algorithms that generate equipment cost estimates as a function of material balances flows. These have been used to generate the total investment cost for a specific sensitivity. In addition to the capital cost algorithms, production costs algorithms have also been developed. These algorithms have proved to be a useful vehicle for conducting extensive sensitivity analysis in the past for NREL (SERI).

An economic analysis has been performed on a fuel ethanol (90 percent ethanol, 5 percent water, and 5 percent gasoline) plant producing approximately 160 thousand metric tons per year (54 million gallons per year). The feedstock to the plant is assumed

to be whole-wood tree chips delivered to the site at a cost of $46 per dry metric ton ($42 per short ton).

The capital investment is provided in the appendix and summarized in Table I.1. At this level of detail the capital cost estimate is judged to have an accuracy of plus or minus 25 percent. The purchased equipment for the ISBL totals $25 MM and the corresponding installed cost is estimated to be $40 MM. The major investment in this area is the SSF facilities having an installed cost of over $17 MM. In the off-site area the major investment item is the boiler package (circulating fluid-bed boiler, BFW system and bag house) which is expected to cost about $27 MM (installed). The total installed plant cost (both ISBL and OSBL) is estimated to be $101 MM. Adding in the indirects to this total gives a total capital investment of $150 MM. The total project investment including the owner's other project costs is estimated to be $165 MM.

TABLE I.1
INVESTMENT COST SUMMARY - BIOMASS TO ETHANOL PLANT
(millions dollars, 1993 basis)

	Plant Area		Installed Equipment
ISBL	100	Wood handling	3.20
	200	Prehydrolysis	7.75
	300	Xylose fermentation	3.19
	400	Cellulase production	1.74
	500	SSF	17.68
	600	Ethanol recovery	6.49
		Total	**40.05**
OSBL	700	Off-site tankage	2.12
	800	Waste treatment	6.09
	900	Utilities	
		Boiler package (including BFW system)	26.61
		Process water	0.45
		Turbogenerator	9.19
		Cooling water package	3.08
		Chilled water package	1.23
		Plant, instrument and fermentation air	5.33
		CIP/CS	0.30
		Buildings	1.60
		Site development	3.60
		Additional piping	1.80
		Total	**61.38**
Indirects	Prorateable costs		10.14
	Field expenses		10.14
	Home office construction and fees		25.36
	Contingency		3.04
	Total capital investment		150.12
	Owner's costs		15.01
	Total project investment		**165.13**

A detailed cost of production estimate is provided in Section VI and summarized in Table I.2. The net raw materials is estimated to be $208 per metric ton (62 cents per gallon). Utilities are estimated to provide a credit of about $33 per metric ton (10 cents per gallon). The total variable cost is $175 per metric ton (52 cents per gallon).

TABLE I.2
COST OF PRODUCTION SUMMARY
(US$ per metric ton)

Raw materials	205
By-product credits	3
Net raw materials	**208**
Utilities	(34)
Variable cost	**175**
Direct fixed costs	26
Allocated fixed costs	21
Total cash cost of production	**222**
Annual capital charges	207
Cost of denatured ethanol	**430**

Adding in the direct fixed costs ($27 per metric ton) and allocated fixed costs ($21/per metric ton) gives a total cash cost of production of $222 per metric ton or 66 cents per gallon.

Adding in the annual capital charge (20 percent of total investment) almost doubles the production cost. The resulting cost of denatured ethanol is $430 per metric ton or $1.27 per gallon. This corresponds very closely with the results of the 1991 SERI report.

The report prepared in 1991 by SERI examined numerous parameters and their influence on the biomass process. In order to approach the target of 67 cents per gallon, in this

study several improvements have been combined within one sensitivity. The changes to the base case can be grouped into three categories (see Table I.3):

- Technology improvements (yields, fermentation times, equipment, ethanol concentrations, enzyme loading, etc.)
- Feedstock production improvements (cost and content)
- More optimistic cost of production factors (electricity selling price and onstream time)

TABLE I.3
PROCESS PARAMETERS AND ASSUMPTIONS

	Base Case	Sensitivity (goal)	my scheme
Cellulose to ethanol yield, %	75.7	90	90
Xylose to ethanol yield, %	85.5	95	90
Xylan to xylose yield, %	80.0	90	95
SSF fermentation time, days	7	3	2
Xylose fermentation time, days	2	1	
Ethanol concentration in SSF, %	4.17	6	
Cellulase loading, IU/g	7	3	3
SSF and xylose seed fermentations	yes	eliminated	
Feedstock cost, $/dry ton (short)	42	34	34
Feedstock carbohydrate content, %	70.2	77.2	—
On-stream time, %	91.3	98	98
Electricity selling price, cents/KWH	4.2	6	4
Ethanol purification	distillation	mole sieve	

The flow scheme for the sensitivity case remained essentially unchanged from the base case except for the distillation section where a pressure swing adsorption unit (mole

sieve) has been used in place of the rectifying column to bring the concentration of ethanol from 4.7 to 94.5 percent in the final product.

The results of the sensitivity case shows a savings in investment of $25 million in the total capital investment or about 15 percent less than the base case. The yield or production of ethanol per unit of wood feedstock has increased by about 30 percent over the base case. The consumption of utilities improved in all areas. The estimate of the cost of production shows that the cost has been lowered to $251 per metric ton (74 cents per gallon).

As a result of this study, Chem Systems has concluded that the overall process concept appears to be feasible and is generally supported by reasonable engineering judgement. Areas that need further investigation and substantiation include:

- The affect of the solids concentration in the feed to the on the distillation system
- The affect of the high pH on the fermentation tanks and finding a suitable lining for the same
- Development/verification of the sensitivity case assumptions (e.g., yields, etc.) in order to achieve reasonable plant economics
- Verify large scale equipment feasibility

If, in addition to the improvements discussed and implemented in this report, efforts are made to reduce power consumption, to continue to optimize other aspects of the process, and to increase the carbohydrate content of the feedstock, one could expect the ethanol price to be reduced even further.

II INTRODUCTION

A. BACKGROUND

In 1991 the National Renewable Energy Laboratory (NREL) developed a technical and economic analysis for a commercial scale plant producing ethanol from biomass. This study conducted by the Solar Energy Research Institute (SERI) draft report was entitled "Technical and Economic Analysis of an Enzymatic Hydrolysis Based Ethanol Plant." More specifically, the design is for a fuel grade ethanol plant based on wood as the feedstock. This analysis is based on earlier work for the Ethanol Program of the U.S. Department of Energy's (DOE) Biofuels Division. The objective of the 1991 study was to incorporate the latest R&D developments into the bases of the design. The purpose of this study is to update and validate the results of the 1991 report based on a more detailed engineering analysis.

B. ISSUES AND OBJECTIVES

Chem Systems has been commissioned to perform a technical and economic evaluation of the plant design described in the SERI draft report entitled "Technical and Economic Analysis of an Enzymatic Hydrolysis Based Ethanol Plant." In addition Chem Systems has been asked to examine the effect of process improvements on product cost. It has been assumed that these improvements could be attained through R&D on the feedstock and the conversion processes and through operational experience on a scaled-up processes. The 1991 SERI analysis determined a base case product cost of $1.27 per gallon of ethanol product, and a target product cost of $0.67 per gallon.

NREL's current objective is to conduct an independent technical and economic evaluation of the plant design and a sensitivity analysis for a biomass-to-ethanol plant. This includes:

- The independent development of a process design using NREL's existing design parameters.
- The development of investment and production economics.
- Economic sensitivities as a function of design and operating parameters.

Specifically Chem Systems objectives are to:

- Check that the low price of ethanol derived in the SERI report can be achieved.
- Confirm the reasonableness of NREL's process design from an engineering standpoint.
- Inform NREL as much about Chem Systems' methodology as possible (including assumptions, simulator convergence techniques, cost estimating techniques, cost algorithms, etc.).

C. METHODOLOGY

Using the SERI report as a basis and starting point, Chem Systems has developed a heat and material balance for the wood-to-ethanol process using its process design experience and a process simulator computer software program licensed to Chem Systems. This program also generated most of the equipment size specifications. The design basis parameters included data on feedstock composition as well as yields, operating conditions and material balance for prehydrolysis and hydrolysis reactions, fermentation, and enzyme production. Based on a 580 thousand metric tons per year (160,000 pound per hour) of wood (dry) feed rate at a southeast US location, investment capital (both inside and outside battery limits) and production costs have been estimated.

To improve the usefulness and accuracy of the model as a tool for carrying out sensitivities, Chem Systems has developed algorithms that will generate equipment cost estimates as a function of material balance flows, which will be used to generate the total investment cost for a specific sensitivity. In addition to the capital cost algorithms, production costs algorithms have been developed. These algorithms have proved to be a useful vehicle for conducting extensive sensitivity analyses in the past for NREL (SERI).

1. Process Configuration (Section III)

Starting with the SERI report as a basis and starting point, Chem Systems has used its own process engineering judgement, as well as industry expert input and vendor information to determine the final process design/configuration.

2. Process Simulation (Section IV)

The heat and material balance for the final ethanol-to-biomass process has been simulated using a computer model (CHEMCAD III) licensed by Chemstations, Inc. A complete heat and material balance has been produced for the onsite unit operation of the base case and has included the development of utility requirements. Similarly, the steam system has been simulated using CHEMCAD.

3. Equipment Sizing (Section V)

The CHEMCAD program has been used to size most of the equipment used in the ethanol-to-biomass process. Equipment not sized or handled by this program, has been sized manually by Chem Systems engineers for cost estimating purposes and for use in the appropriate cost algorithms.

4. Cost Model (Section VI)

The equipment cost has been estimated through a combination of vendor quotes, licensed computer software and in-house data. The cost of several specialized equipment items was estimated based on vendor quotes. From this, the total capital investment for each plant section has been estimated based on using appropriate factors on the equipment cost to get field installed cost and then total plant cost. To this, value Chem Systems has added representative project costs such as owner costs, start-up expenses, working capital, etc. to develop the total project cost.

The production costs estimate has been developed using the heat and material balance data to determine raw material, product, by-product and utility consumptions. The labor, maintenance and overhead costs have been based on typical industry rates.

5. Sensitivity Analysis (Section VII)

A sensitivity analysis has been prepared for a combination of parameters (e.g., yield, fermentation time, ethanol concentration, etc.) in an attempt to achieve an ethanol cost of 67 cents per gallon.

III PROCESS DESIGN

A. BASE CASE (as represented in SERI report)

The starting point for this evaluation is the design as presented in the 1991 SERI report and modified during the course of this study by Chem Systems for operability and by NREL based on their latest knowledge and understanding of the process.

The base SERI process takes wood chips, which are delivered to the plant and stored in a large pile, and then conveys the wood to the disk refiner where it is reduce in size. The milled chips are sent to a prehydrolysis reactor which includes treatment with dilute sulfuric acid for the conversion of a large fraction of the wood xylans to xylose. Recycle water is added to the mixture after a blowdown tank to reduce the solids concentration to a level that can be pumped to the neutralization tank. The sulfuric acid is then neutralized with lime and the resulting slurry, including the precipitated gypsum is cooled and sent to xylose fermentation. The xylose is converted to ethanol by a genetically engineered *E. coli*. This diluted ethanol and cellulose/lignin stream is sent to cellulose fermentation where cellulose is converted to ethanol by the SSF process.

A small fraction of the neutralized stream is sent to the sterile feed tank for feed to the cellulase production fermenters where the fungus *T. reesei* consumes the cellulose and produces cellulase. In addition, nutrients and corn steep liquor are mixed and sterilized in a separate tank and then added to the cellulase fermenters. After the batch cellulase fermentation is complete, the broth is pumped to the cellulase hold tank from where it is pumped continuously to the simultaneous saccharification and fermentation (SSF) reactor. The cellulase enzyme catalyzes the hydrolysis of cellulose to glucose, which is then consumed by the yeast to produce ethanol all in the same reactor. The fermentation to ethanol is carried out by a mixed culture of *Sacchromyces cerevisiae* and *Brettanomyces clausenii*.

The dilute ethanol stream from the SSF reactors is sent to ethanol purification where a distillation operation produces 95 weight percent ethanol. The waste stream from the bottom of the beer column is sent to centrifugation to remove the lignin and unreacted solids, which are then sent to the boiler. A fraction of the liquid stream from the

centrifuge is recycled back to the process and the rest is sent to waste treatment to be purified and then recycled back to the process water system.

The facility requires several utility generation and offsite systems including:

- A co-generation system (steam boiler, boiler feedwater system and turbogenerator)
- A process water system
- Plant and instrument air, fermentation air
- A chilled water system
- A low-pressure vent system
- Off-site tankage
- A clean-in-place and chemical sterilization system (CIP/CS) for the fermenters

The major parameters that have been revised by NREL during the preparation of the Chem Systems' design are summarized below and described in detail in Section B:

- The feed has been specified to expand the component xylan to include galactan, arabinan and mannan and their associated sugars (galactose, arabinose and mannose). The appropriate yield data has been provided by NREL.
- The acid concentration in the prehydrolysis effluent is regulated to be 0.85 weight percent of the water leaving the reactor.
- The dilution water is regulated to provide a biomass concentration of 35 weight percent leaving the prehydrolysis flash tank.
- The process water makeup has been moved from before the recycle loop (mixed with water from lignin separator) to after the wastewater treatment area. This increases the recycle water temperature to about 95°F.

- *B. clausenii* (BC) is no longer produced. In addition the BC seed fermentation line has been removed from the design.

- The impregnation reactor has been eliminated and replaced with the pilot plant design by Sunds Defibrator, Inc.

- SSF seed air rate has been cut in half to reflect only one seed train now in operation (versus two in the SERI design).

Other changes made by NREL that were made during the course of the development of the heat and material balance include:

- Mannan and galactan which were originally specified to have a conversion in the prehydrolysis reactor of 3 percent have been changed to have a conversion of 80 percent.

- No C_5 sugars are being converted in the SSF Seed Fermenters.

- Mannan and galactan are now converted at 80 percent in SSF, not 87 percent like cellulose.

- From an economic point of view, higher pressures and temperature have become more accepted for industrial power plant design in the last 10-20 years. Thus, 1,500 pound steam boiler has been used in place of the 1,100 psig boiler in the 1991 base case.

- The acetaldehyde conversion has been reduced to 0.5 percent

B. CHANGES TO THE SERI BASE CASE

1. Process

After review of the 1984 SERI report, several unit operation modifications, additions and deletions were made to address operability concerns. These changes are described in more detail below. Some modifications were also provided by NREL. Since the issuance of the 1991 SERI report, more research has been done on the process, and new data has been made available for process design. The detailed process design is given in Section D. Equipment numbers referenced in this section can be found on the process flow sheets in Section IV and in the equipment list in Appendix V. A block diagram of the overall process configuration is shown in Figure III.B.1.

(a) Changes to SERI Design Basis

NREL provided several modifications to the original design basis, based largely on research results since 1991.

(1) Wood Composition

Feed composition of the wood has been modified to include more C_5 and C_6 hemicelluloses, as well as C_5 and C_6 sugars. Cellulose composition remains the same, while xylan has been broken out into the hemicellulosic components: xylan, mannan, galactan, and arabinan. The modified wood composition (dry basis) is as follows:

Cellulose:	46.20 wt%
Xylan:	18.05 wt%
Arabinan:	1.35 wt%
Galactan:	1.04 wt%
Mannan:	3.56 wt%
Lignin:	24.00 wt%
Soluble solids:	5.60 wt%
Ash:	0.20 wt%
Total:	**100.00 wt%**

FIGURE III.B.1
BLOCK FLOW DIAGRAM
ETHANOL FROM WOOD PROCESS

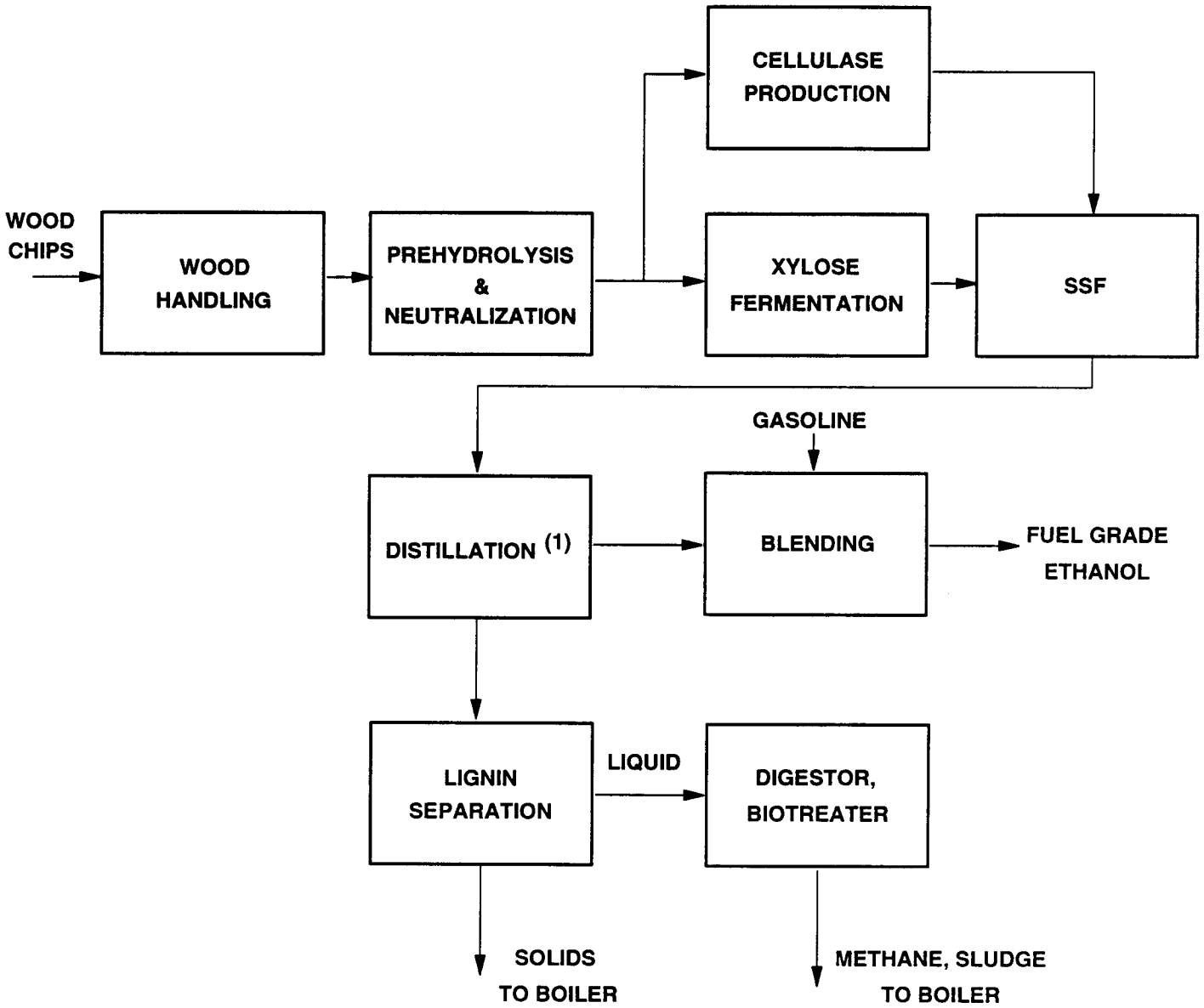

(1) SEPARATION TO AZEOTROPIC ETHANOL

Each cellulose and hemi-cellulose will hydrolyze into their corresponding sugar: cellulose to glucose, xylan to xylose, arabinan to arabinose, mannan to mannose, galactan to galactose. Under hydrolysis condition, the hemicellulosic components are assumed to act like xylan, whether pentosan or hexosan. The pentoses are assumed to ferment like xylose, and the hexoses like glucose. The pentoses are assumed to ferment like xylose, and the hexoses like glucose. *B. Clausenii* is no longer used as an inoculum.

(2) Cellulose Fermentation Inoculum

Only one organism is grown in the SSF seed fermentation process: *S. Cerevisiae.*

(3) Xylose Ammonia Requirements

Ammonia is used for pH control in the xylose fermentation area. Since no data was provided to update neutralization requirements, specifically for acetic and other acid formation in the xylose fermentation reactions, ammonia requirements have been assumed to be 0.0296 kg NH_3 per kg ethanol produced in xylose fermentation. This is based on lower theoretical acid and fermentation byproduct yields.

(4) Lignin Concentration

After the beer still, lignin is concentrated from the beer still bottoms before being sent to the boiler for use as the main source of plant fuel in the co-generation unit and utility boilers. The 1991 SERI report indicated that the cyclone concentrated lignin to a 50 weight percent slurry. This has been modified per NREL's request to a 40 weight percent concentration of lignin in water which is to be sent to the boiler as fuel. The lignin separation area (Area 630) and the boiler/co-generation unit have been modified accordingly.

(b) Design Basis Data

No significant modifications have been made to the design basis data.

2. Engineering

Several engineering modifications were made to the 1991 SERI report in order to address several operability issues. In some cases, designs supplied in the 1991 report would have led to significant down time due to Chem Systems' perceived process inoperability. Changes were instituted to address these issues.

While there remains much engineering work before this process can be actually translated into a working plant, the modifications presented below should provide a realistic basis for a working process. There remains many opportunities for engineering improvements, such as heat integration and pilot plant data, which would result in higher yields and lower operating costs.

(a) Soaking vs. Wash of Wood Feed

It was determined that soaking the wood chips before storage in the feed pile would cause several problems, most notably causing some composting of wood at the bottom of the chip pile. A secondary step would also be necessary to wet the chips before being fed into the disk refiner.

Chips will be stored dry in the pile. They will not be washed prior to storage on the pile to reduce composting in the bottom of the pile. From the storage pile, the chips are sent to the continuous chip washer before they are conveyed to the disk refiner.

(b) Cooling Water Approach Temperature

Approach temperatures in process heat exchangers used in the 1991 report are, in some cases, too tight. While 30°C availability is reasonable for cooling tower water, this temperature can fluctuate significantly with seasonal and even daily environmental variations. It is not uncommon to have 30°C "available" water actually above 35°C.

The approach temperatures in the heat exchangers have, therefore, been limited to 5°C for cooling water (corresponding to a minimum process cooling outlet of 35°C) and 3°C for chilled water (corresponding to a minimum process cooling outlet of 13°C). On hot days, achieving 37°C in the fermentation areas may be problematic with cooling tower water as coolant.

Due to the changes, a few of the heat exchangers in the 1991 report have been switched to chilled water, while others have been added to account for the limit in cooling tower water capabilities.

(c) Addition of Water Scrubber

The 1984 report indicates the use of chilled water vent condensers for the recovery of ethanol from CO_2 fermentation offgas. Vent condensers are inefficient, especially for the recovery of volatile organics from warm, dilute air or gas streams. With the chilled water system presently used, recovery of ethanol from these streams would probably not exceed 70 percent.

General industry practice, in cases where a solvent needs to be recovered from a dilute air stream, is to use a scrubbing system. These have extremely high efficiencies, in many cases recoveries can exceed 99 percent. The vent condensers in the 1991 SERI report have been replaced with a ethanol-containing vent manifold to a water scrubber. The scrubber has been designed for a 95 percent ethanol recovery, using process water as the absorbent phase.

The scrubber water, rich with ethanol, is sent to the distillation area for ethanol purification, while the scrubber gases are sent to the boiler for incineration. There had been some discussion regarding the recycle destination of the scrubber water. Since the vents contain significant impurities, such as HMF, methanol, acetaldehyde, etc., if the scrubber water is sent back before distillation these impurities would build up in the fermentation area. It was felt such a build up would be undesirable. The scrubber water have thus been sent to the beer still for ethanol recovery. The scrubber water should account for less than 10 percent of the beer still traffic.

The increased operating costs due to additional water in the ethanol purification columns is offset by the reduced operating costs from lower chilled water loads, improved ethanol recovery and lower capital costs (one low-cost scrubbing tower vs. several high-surface-area heat exchangers).

(d) Improved Ethanol Purification

The 1991 SERI report significantly undersized the distillation columns required for ethanol purification. The 1991 report indicated reflux ratios of less than 1 for both towers, and only 16 and 24 trays for the beer still and rectification column, respectively. Industry practice is to specify a minimum reflux ratio of 1.2, and simulations indicated a minimum of 40 trays per column was necessary for adequate separation. The report also seemed to ignore the fate of volatile fermentation by-products such as methanol, acetaldehyde, and acids. These light ends need to be removed from the ethanol stream; even though they have fuel value, they adversely affect Reid Vapor Pressure and may cause the ethanol to not meet government or other purity specifications.

The first column remains a beer still. Using a moderate reflux ratio (2.0), overheads are purified to approximately 0.66 weight percent ethanol, while the bottoms leave with less than 10 ppm ethanol. One pass sieve trays are used to keep the column diameter under four meters (maximum highway transportation width) and to minimize tray fouling and plugging due to the presence of solids.

The second column rectifies the beer still overheads to 94.7 weight percent ethanol (near azeotropic concentration). Bottoms once again contain under 10 ppm ethanol. The rectification still bottoms are sent to wastewater treatment. From a middle tray in the rectification still fusel oils are removed. Fusel oils are fermentation byproducts, typically amyl and isoamyl alcohol, with smaller quantities of branched 3- to 5-carbon secondary alcohols. These fusel oils tend to fall out of the water/ethanol solution at one tray, where they accumulate if they are not removed. The fusel oils are removed, washed with recycle water at a ratio of 10 to 1, then sent to the boiler for use as supplemental fuel.

Volatile fermentation byproducts such as acetaldehyde and methanol are removed using a vapor purge from the overheads of the rectification still. These vapors are burned in the boiler as supplemental fuel.

(e) Water Balance Optimization

Water use has been estimated for each area. Overall, a total recycle of wastewater is used to reduce overall water consumption. Because of water losses in the cooling tower, as well as vent losses, makeup water is provided from an on-site well or river source.

The recycle water is distributed by the recycle water pump (PP-631). The composition of the recycle water has been estimated using model simulation convergence. Convergence criteria was set at a less than 5 percent change between iterations. The recycle water is no longer refreshed with makeup water; makeup water is now mixed with water from wastewater treatment before recycle to utilities and wood washing. Fresh water is used also as the scrubber absorbent and for lime slurry dilution.

(f) Materials of Construction

In general carbon steel construction has been utilize throughout the plant consistent with the SERI report except where it would deemed to be inadequate either due to corrosion or other reasons as explained below. The following items have been upgraded from carbon steel:

Cellulase Fermenter, FM-400	Lined CS (or SS if less than 2 m^3)
Cellulase Seed Fermenter, FM-401-4	Lined CS (or SS if less than 2 m^3)
SSF Seed Fermenters, FM-501-5	Lined CS (or SS if less than 2 m^3)
SSF Fermenters, FM-500	Lined CS (or SS if less than 2 m^3)
Sulfuric acid storage tank, T-703	Fiberglass (CS inadequate)
Beer transfer pump, PP-505	SS

The cellulase and SSF fermenters have been upgraded based on the knowledge that the pH cold be as low as 3.5 in these tanks (re. page 15 of SERI report). Although the specific lining has not been specified it is assumed that a suitable lining will be developed by the time this technology becomes commercial. (The cost has been estimated based on data provided by NREL). The small vessels associated with the fermenters have been specified as stainless steel in based on ease of manufacturing. The corresponding pumps have been upgraded to stainless steel to be consistent.

(g) Lime Handling

The SERI 1991 design for lime addition would result in frequent shutdowns, poor control, and in general lacked operability. Lime is a naturally hydrophilic substance; the material clumps and is in general extremely difficult to move using traditional solids handling equipment. Frequent plugging would occur in both the Vacuumax transfer line and the

rotary valves. Controlled addition necessary for accurate neutralization is realistically not practical.

The lime addition system has been reconfigured to minimize solids handling problems. Lime is still delivered via hopper rail car to the lime unloading pit (MF-224). However, a slurry storage tank (T-720) has been added; lime is dumped from the rail car via the unloading conveyor (GS-223) to the slurry lime tank, where it is mixed with an equal amount of fresh makeup water. The 50 percent slurry is then sent to a day tank. The slurry is then metered via the slurry pump (PP-221) to the neutralization tank (T-206).

This method incurs approximately the same capital cost requirement as the 1991 design, while eliminating the many problems associated with solids handling.

(h) Heat Integration/Optimization

Extensive heat integration in the ethanol purification area has been employed to reduce overall steam consumption. Flash vapor from are 200 (prehydrolysis), in combination with beer still bottoms, have been used to preheat the beer still mash feed. In addition, the beer still is operated at a higher pressure so that the overhead condenser can act as the rectification still reboiler.

These integration modifications, along with sensitivities, are discussed in more detail in Section IV and V.

(i) Impregnator Design

The impregnator was not simulated on the process model. The prehydrolysis reactor was assumed to provide 100 percent of the reaction time necessary for prehydrolysis. No data was available to model wood reactions in the impregnator section (MR-201).

(j) Gypsum Plating

Due to the use of lime as a neutralizing agent for sulfuric acid, gypsum is produced. Gypsum solubility, therefore, required close monitoring to keep track of plating problems. In most cases, the area most susceptible to plating problems is the beer still reboiler,

where vaporizing water can induce gypsum plating on the tube walls. A spare reboiler was added to minimize downtime due to boiler gypsum plating.

The engineering will include a manual check for salt solubilities, and make appropriate breakdowns into soluble and insoluble gypsum. Appendix V lists the gypsum balance for the process.

(k) Size of Fermentation Tanks and Mixing Requirements

Mixing requirements for the fermentation tanks, based on discussions with industry experts, should be a minimum of 0.15 kW/1000 gallons holdup. In cases where the SERI 1991 report indicated lower mixing requirements, requirements were increased to reflect the newer minimum mixing power.

(l) Wood Handling and Pumping

Centrifugal pumps are not appropriate for this type of service. Positive displacement pumps, normally screw-type, are the best devices for this type of service; they can handle sticky slurries without compacting the material.

The pumps used in wood slurry applications will be lobe pumps.

For slurry pumps, an Brake Horsepower (BHP) efficiency of 75 percent was used; this value is conservative and actual pump efficiencies may be higher. For other liquid pumps, an 85 percent efficiency was assumed; this is consistent with conventional centrifugal pump design.

C. PROCESS DESCRIPTIONS: INSIDE BATTERY LIMITS (ISBL)

A description of a Chem Systems' process design for a nominal 50 million gallon per year ethanol plant is presented below. The corresponding equipment list is given in Appendix V. The process flow diagrams are presented in Section IV. Simplified block flow diagrams are presented in this section.

1. Feedstock Composition Basis

The feedstock composition basis has been revised from the 1991 SERI report to account for hemicellulose concentrations found in poplar and other similar woods.

Cellulose:	46.20 wt%
Xylan:	18.05 wt%
Arabinan:	1.35 wt%
Galactan:	1.04 wt%
Mannan:	3.56 wt%
Lignin:	24.00 wt%
Soluble solids:	5.60 wt%
Ash:	0.20 wt%

2. Wood Handling

A block flow diagram of the wood handling area is shown in Figure III.C.1. Freshly cut 1.0-in wood chips are delivered by 23-ton trucks to a receiving station, which consist of a hydraulic truck dumper with scale (GY-101A/B/C/D). Chips are off-loaded into a storage pile. Wood from the pile is off-loaded by front-end loaders (GM-101A/B/S) into a washing flume, where heavy tramp materials are separated from the chips. The wet chips are swept by water flow via a flume pump (PP-101) to be picked up by a radical stacking conveyor (GS-101), which transfers the chips to the disk refiner (GG-101A/B/C/D). Along the conveyor, small magnetic items of down to 12.7 mm are removed by a magnetic chip cleaner (GS-103). The chips are milled down to 3 mm. The milled chips drop directly onto the milled chip belt conveyor (GS-102) and are delivered to the screw feeders (GS-202A/B).

Milling power is estimated at 95 kWh per dry ton.

FIGURE III.C.1
BLOCK FLOW DIAGRAM
SECTION 100 - WOOD HANDLING

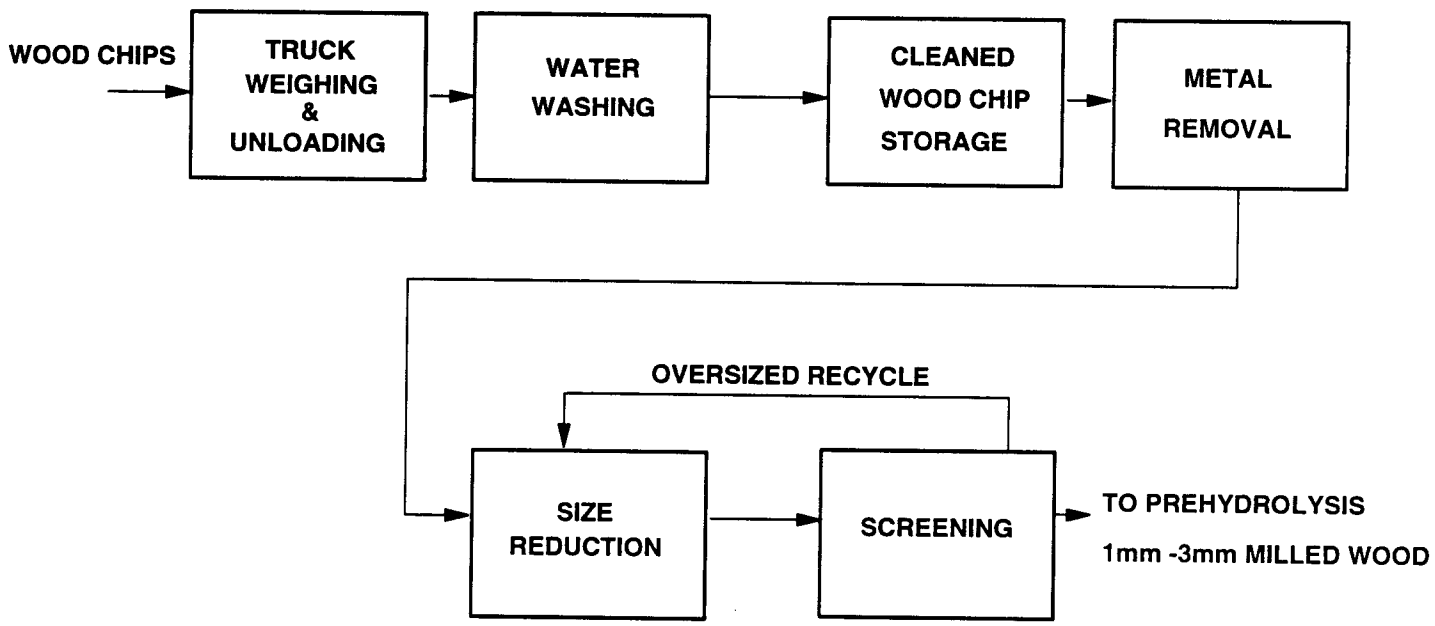

3. Prehydrolysis

The slurry screw feeders (65-202/t/b) delivers slurry to the impregnator reactor (MR-201). The plug screw feeder is connected to a tee-pipe assembly which discharges directly to the inlet of the chemical mixer. The tee-pipe assembly is equipped with a shredder down screw to break-up the material plug prior to impregnation with sulfuric acid solution. The impregnated material is discharged directly into the first horizontal hydrolyzer. Two horizontal hydrolyzers are connected in series to provide 10 minutes retention time based on 70-80 percent fill rate. The horizontal hydrolyzer (digesters) are equipped with steam inlet connections for the medium pressure saturated steam required to complete the reaction. The cut flight and paddle type screw design will provide the proper agitation of the impregnated cellulosic material to allow the saturated steam to penetrate to the center which is necessary to achieve a uniform cook. The digested material is discharged from the second horizontal hydrolyzer via a vertical discharger arrangement. The prehydrolysis and neutralization areas are shown in Figure III.C.2

The following reactions take place:

Cellulose to glucose:	3 percent conversion
Mannan to mannose:	80 percent conversion
Galactan to galactose:	80 percent conversion
Cellulose, mannan and galactan to HMF:	0.1 percent conversion
Xylan to xylose:	80 percent conversion
Arabinan to arabinose:	80 percent conversion
Xylan and arabinan to furfural:	13 percent conversion

The remaining cellulose, hemicelluloses and solids remain unconverted. The hemicellulosic components are assumed bound with xylan, and thus to hydrolyze at similar rates to xylan.

The vertical discharger from MR-201 is designed specifically for discharging from medium pressure-type application in combination with two shutter-type blower valves. The digested pulp is then blown into the blowdown tank (T-203), which operates at 108 kPa.

The prehydrolyzate undergoes an adiabatic flash to cool the material; the vapors are used for heat recovery to preheat the fermented mash going to the beer still (see Area 600).

FIGURE III.C.2
BLOCK FLOW DIAGRAM
SECTION 200 - PREHYDROLYSIS AND NETURALIZATION

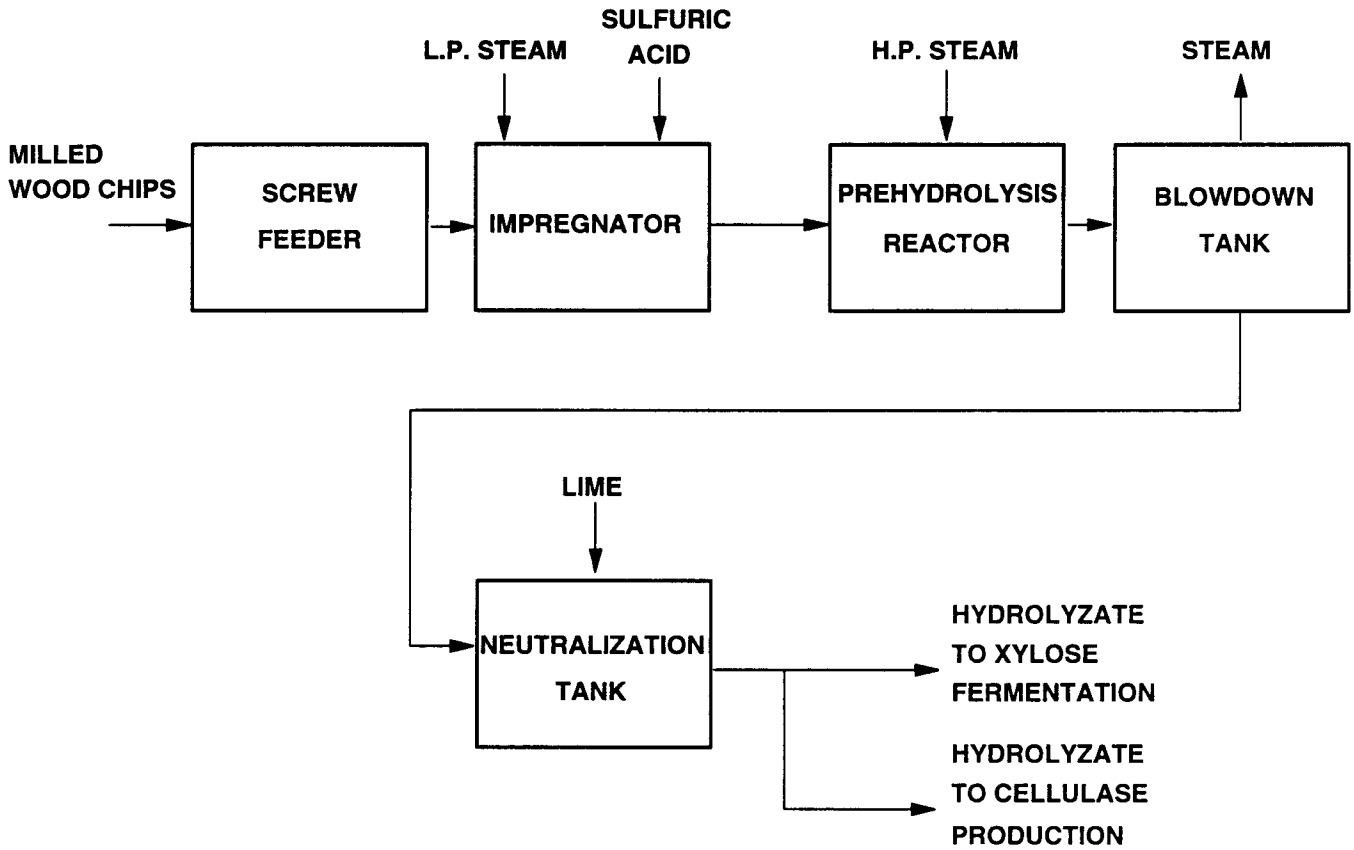

In the lower section of the blowdown tank, the flashed slurry is mixed with hot recycle water to dilute the solids concentration to 12.0 weight percent. Residence time is negligible (set at 5 minutes), and mixing power is set at 1.5 kW/1000 gallons.

The slurry is then pumped by the hydrolyzate pump (PP-202) to hydrolyzate neutralization.

4. Neutralization

Hydrated lime ($Ca(OH)_2$) is delivered from the lime hopper rail cars to a slurry storage tank (T-730), where it is mixed with fresh makeup water (PP-731) to form a 50/50 slurry of $Ca(OH)_2$ and water. Lime from the slurry storage tank is then sent to fill the lime slurry day tank (T-220) via pump PP-732. The slurry is then metered via the slurry pump (PP-221) to the neutralization tank (T-206). Mixing power is specified at 1.5 kW/1000 gallons. It is presently assumed 1 mole of $Ca(OH)_2$ can fully neutralize one mole of sulfuric acid. Due to solids present in the system, and imperfect mixing, the actual lime consumption may be higher for full neutralization. In future studies, actual neutralization potential of lime will need to be evaluated in the presence of the solids to calculate actual as opposed to theoretical lime consumption.

The neutralizate is then cooled to 37°C using a cooling tower water heat exchanger (TT-220). The hydrolyzate pump (PP-203) then distributes hydrolyzate to xylose fermentation and cellulase production.

The split of hydrolyzate between cellulase production and xylose fermentation is determined by a balance of cellulase consumed during SSF vs. cellulase production. The following formula defines the flow split:

$$XLm_c = (1-X)(m_c + m_x)Y$$

where:
- X = fraction of stream to SSF
- L = cellulase loading in SSF, IU/g cellulose
- m_c = cellulose flow rate, kg/h
- m_x = xylose flow rate, kg/h
- Y = cellulase yield, IU/g cellulose

Under the base case conditions, X is approximately 3 percent of the hydrolyzate. IU is an International Unit which describes enzymatic activity. IU to grams is dependent on the specific enzyme and generation.

5. Xylose Fermentation

The hydrolyzate not sent to cellulase production is pumped to the xylose seed fermentation area. Here it is split into streams going to xylose fermentation and xylose seed fermentation. Refer to Figure III.C.3.

Anaerobic xylose fermentation occurs in a series of 750,000 gallon stirred tank reactors (FM-303A/F). Fresh inoculum (10 vol percent) and the wood slurry are mixed into the first fermenter. Flow between successive fermenters is via hydraulic head; each fermenter is approximately 18 inches higher than the next one in line. The fermenters operate at 108 kPa, and at 95 percent capacity. The process is controlled to operate at 37°C, using internal cooling coils cooled by chilled water rising from 10°C to 13°C, and a pH of 6.5, using bubbled ammonia as the neutralizing agent. Ammonia consumption for neutralization is estimated at 0.0296 kg ammonia per kg ethanol produced (no data was available on acid production during fermentation). Total fermenter residence time is set at two days.

The ethanol conversion is set at 85.5 percent: only 90 percent of the total sugars (pentoses and hexoses) are available as free sugars for fermentation (the remaining are unavailable as sugar bound to wood solids), and the theoretical conversion of free sugars to ethanol is 95 percent. Cellmass growth is assumed to be negligible under xylose fermentation conditions.

Mixing power for the fermenters is set at 0.15 kW/1000 gallons. (See discussion in Section III).

E. coli inoculum is grown in a series of six seed batch fermenters, filled to 95 percent of their capacity on a combined 2.0 weight percent glucose/xylose substrate. The fermentation time is 12 h/batch fermenter with an additional 12 hours for cleaning and turnaround. The temperature is maintained at 37°C using internal cooling coils supplied by chilled water, and there is no pH control.

FIGURE III.C.3
BLOCK FLOW DIAGRAM
SECTION 300 - XYLOSE FERMENTATION

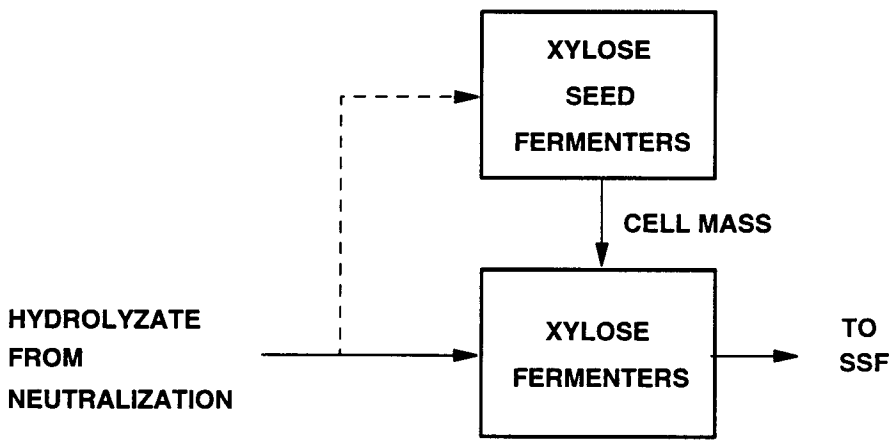

Unlike the 1991 SERI report, CO_2 production from cellmass growth has not been ignored. Fermentation gases are sent to the boiler for incineration. Air injection is set at 0.2 vessel volumes per minute (vvm). Mixing power is set at the minimum, 0.15 kW/1000 gallons. Cooling of heat of fermentation is supplied by chilled water running through internal cooling coils.

The contents of the seed fermenters flows via pressure difference (due to fermentation air compressors) continuously to the first xylose fermentation tank, from a seed hold tank (T-301). The mixing power is also set at 0.15 kW/1000 gallons.

It is assumed that cellulose, xylan, arabinan, galactan nor mannan are consumed during the seed fermentation process. Ammonia is added as a nitrogen source for cell growth. Ammonia consumption is assumed to be stoichiometric, or 0.169 kg NH_3 per kg cellmass grown. Cellmass is assumed to have the following empirical composition, based on 50 percent by weight protein: $CH_{1.640}N_{0.230}O_{0.390}S_{0.004}$. Sulfur was ignored due to the small percentage in the empirical formula. Cell growth yield is estimated at 0.5g cellmass per g substrate consumed.

Offgases from the seed fermentation are sent to the LP vent system for incineration. Offgases from the xylose fermentation are sent to the vent scrubber for ethanol recovery.

Fermented product is sent to SSF via a booster pump (PP-303).

Process simulations which calculate material and energy balances require conversion and selectivity to calculate balances. Conversion is defined as:

$$1 - \frac{\text{(mol reactant remaining)}}{\text{(mol reactant at start)}}$$

Selectivity is defined as:

$$\frac{\text{mol desired product}}{\text{mol all product}}$$

Yields define reactions in terms of products, not the reactant;

$$Y = \frac{\text{mol reactant used}}{\text{mol desired product}}$$

Yields do not account for any byproduct formation; some of the reactant used may have been used for byproduct formation. Therefore, yield data is insufficient to provide enough data for a reaction data in terms of yields. Only in the 1991 SERI report material balance are overall conversion provided indirectly. As such, the model simulation uses these fixed conversions, not conversions based on the reactor conditions (temperature, pressure, residence time, etc.). The model cannot at the present time estimate conversion changes due to changes in reaction conditions. Future pilot data will need to be provided in terms of sugar/hemicellulose conversions and ethanol selectivity in order to allow the model to estimate changes in conversions based on changing fermentation conditions.

6. Cellulase Production

Neutralized hydrolyzate is split into two streams: one for cellulase seed fermentation, the other for cellulase production. A block flow diagram of the cellulose production area is shown in Figure III.C.4.

T. reesei inoculum is aerobically obtained from a series of batch cellulase seed fermenters (FM-401/2/3/4 A/B). Each is filled to 80 percent capacity, and flow is via pressure difference supplied by fermentation air pressure. Each seed fermenter has a batch cycle time of 4 days (residence time 3.5 days). The inoculum for all seed fermenters is 5 vol percent. For the last seed fermenter, the initial substrate composition is 1 weight percent combined cellulose/xylose; for the remaining fermenters, 1.0 weight percent glucose is used.

Cooled recycle water is used for dilution (cooled via CWS in TT-301A). The seed fermenters are maintained at 28°C via internal cooling coils, supplied by chilled water with a temperature rise of 3°C. Fermentation air is supplied at a rate of 0.2 vvm. Mixing power is supplied at 0.37 kW/1000 gallons holdup for the final fermenter, and 1.5 kW/1000 gallons for the remaining fermenters. Ammonia is used to maintain pH at 4.8.

FIGURE III.C.4
BLOCK FLOW DIAGRAM
SECTION 400 - CELLULASE PRODUCTION

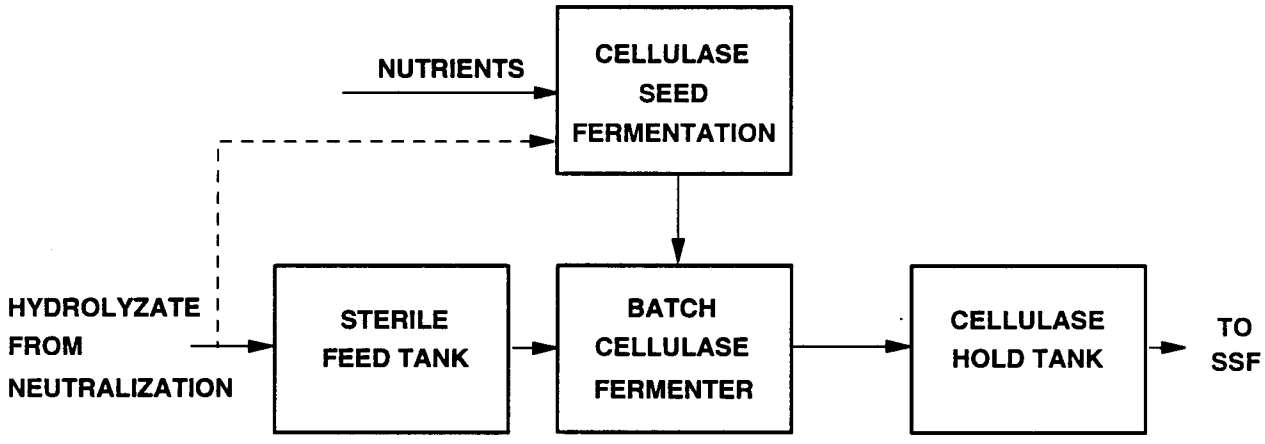

It is assumed that *T. reesei* and *E. coli* have similar empirical cell compositions. As per design data, xylan and arabinan are not consumed as substrate during cellulase seed fermentation or production. No cellulase is assumed to be produced in the seed fermenters.

Feed is delivered to the aerobic cellulase batch fermenters (FM-401A/B/C) from the cellulase feed hold tank (T-405 and PP-401), with five percent inoculum as well. Each tank is a batch fermenter of 250,000 gallons, running at 80 percent capacity with a cycle time of two days each for a total batch time of 5.7 days, and a cycle time of 6 days. Corn steep liquor and nutrients are sterilized at 121°C for five minutes in the media prep tank (T-400) by external steam heating, and the delivered to the cellulase fermenter via pump PP-411.

The cellulase production runs at 28°C. Recycle water is chilled to 28°C and added to the fermenter, producing a final cellulase concentration of five weight percent. The pH is maintained at 4.8, and the pressure is kept at 170 kPa.

7. Simultaneous Saccharification and Fermentation (SSF)

Material from xylose fermentation is split into two streams: 20 percent to SSF seed fermentation, and the remaining 80 percent to SSF. A block flow diagram of the SSF area is shown in Figure III.C.5.

Yeast inoculums of *S. cerevisiae* are grown in a series of batch seed fermenters (FM-501A/B to FM-506A/B) in two parallel aerobic tracks. The fermenters are operated at 95 percent capacity, with a total residence time of one day for *S. cerevisiae*. The inoculum for each train is 10 vol percent. The substrate used for each fermenter is 1.0 weight percent glucose, purchased, except for the final seed fermenter which uses xylose fermentation mash upgraded to 1.0 weight percent glucose. Cellulase loading is seven IU/g cellulose. The seed fermentation is controlled at 37°C via internal cooling coils fed by chilled water, and the pH is uncontrolled. Air flow rate is set at 0.2 vvm, while mixing power is specified at 0.38 kW/1000 gallons holdup for the final fermenter, 0.75 kW for the remaining seed fermenters.

FIGURE III.C.5
BLOCK FLOW DIAGRAM
SECTION 500 - SIMULTANEOUS SACCHARIFICATION AND FERMENTATION (SSF)

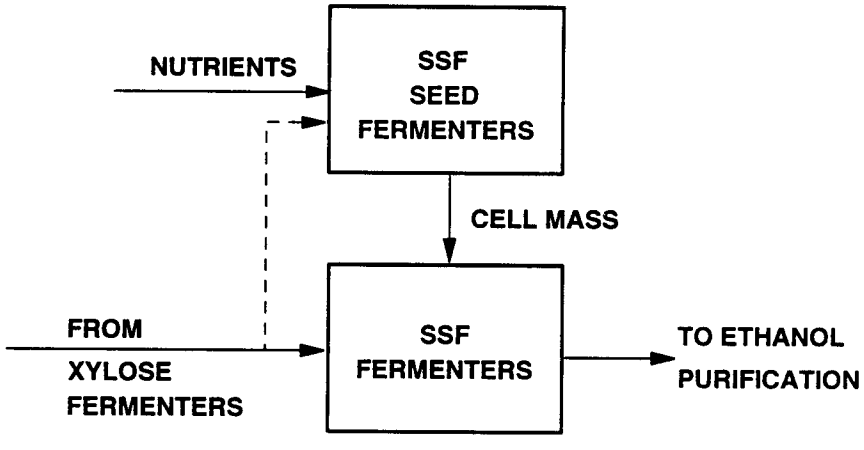

Cellmass production is estimated at 100 percent conversion of sugars, for 0.5g cellmass per g sugar. The vent gases are sent to the vent scrubber for ethanol recovery, since CO_2 production during cellmass growth results in ethanol lost in the vents.

The main portion of the xylose fermenter mash is mixed with the cellulase from the cellulase hold tank (T-410A/B) in the first SSF fermenter (FM-500A). Cellulase loading is specified at seven IU/g cellulose. *S. cerevisiae* inoculum, at 10 vol percent, are also blended into the first SSF fermenter. The SSF reactor consists of 750,000 gallon tanks, anaerobic continuous stirred tank reactors, arranged in parallel trains to yield a total residence time of seven days. Tanks are maintained at 95 percent capacity. Flow between the fermenters is by gravity flow. The temperature is maintained by internal cooling coils, supplied by chilled water raised from 10°C to 13°C. Mixing power is specified at 0.075 kW per 1000 gallons of holdup.

The SSF conversions are calculated to be as follows:

Hydrolysis	
cellulose to glucose:	87 percent
Mannan to mannose:	80 percent
Galactan to galactose:	80 percent
Xylan to xylose:	80 percent
Arabinan to arabinose:	80 percent
Fermentation	
Hexoses to ethanol:	87 percent
Hexoses to fusel oils:	0.1 percent
Hexoses to glycerol and acetaldehyde:	5.6 percent
Hexoses to cellmass:	7.3 percent

The pentoses are not consumed by the SSF fermentation yeasts. Cellmass yield is estimated at 0.5g cellmass per g hexose.

Vent gases comprised of CO_2 and entrained ethanol are sent to the vent scrubber for ethanol recovery. The SSF fermented mash is sent to ethanol purification via the SSF transfer pump (PP-505).

8. Distillation and Recovery

All ethanol-containing vents are directed to the vent scrubber (AS-604). The vent scrubber is a simple packed bed tower where vent vapors are directly contacted with cold process water to condense, absorb and recover ethanol from a dilute vent stream. The scrubber water rate is specified to achieve 95 percent ethanol recovery from the vent. The non-condensible vent gases are sent to the boiler for incineration. The scrubber bottoms are sent to the beer still (AS-601) via a transfer pump (PP-641) for ethanol recovery; the bottoms contain approximately one weight percent ethanol. A block flow diagram of the distillation area is shown in Figure III.C.6

Fermenter mash from SSF is preheated in several steps by heat integration. The mash is first used to condense overheads from the rectifying column (AS-602), which heats the mash to 79°C in exchanger TT-623. The mash is then further heated by condensing the flash vapor from prehydrolysis in exchanger TT-615. This raises the mash to approximately 97°C. The mash is then passed through a degasser drum (T-601) to remove any dissolved gases and stabilize operation of the beer still. Any flashed gases are sent to the scrubber to recover entrained ethanol.

The degasser drum bottoms are then further heated using the bottoms of the beer still (TT-629), up to 120°C. A trim heater using HP steam (TT-613) is supplied for start-up and upset conditions, but is not expected to be used during normal operation.

The ethanol-rich water from the scrubber (AS-604) is preheated using the hot condensate from the flash exchanger (TT-615), and further heated to 120°C using the bottoms of the beer still in exchanger TT-625.

The beer still is a 38 (actual) tray column operating at 412 kPa which preconcentrates the beer mash to approximately 66 weight percent ethanol in water, which leaves overhead, along with light impurities such as methanol, acetaldehyde, and other contaminants (e.g. fusel oils). The reflux ratio is set at 2. The bottoms of the beer still comprise the remaining water, solids, and heavy contaminants (e.g. glycerol). The bottoms have been specified to contain no more than 100 ppm ethanol.

FIGURE III.C.6
BLOCK FLOW DIAGRAM
SECTION 600 - ETHANOL
PURIFICATION AND SOLIDS SEPARATION

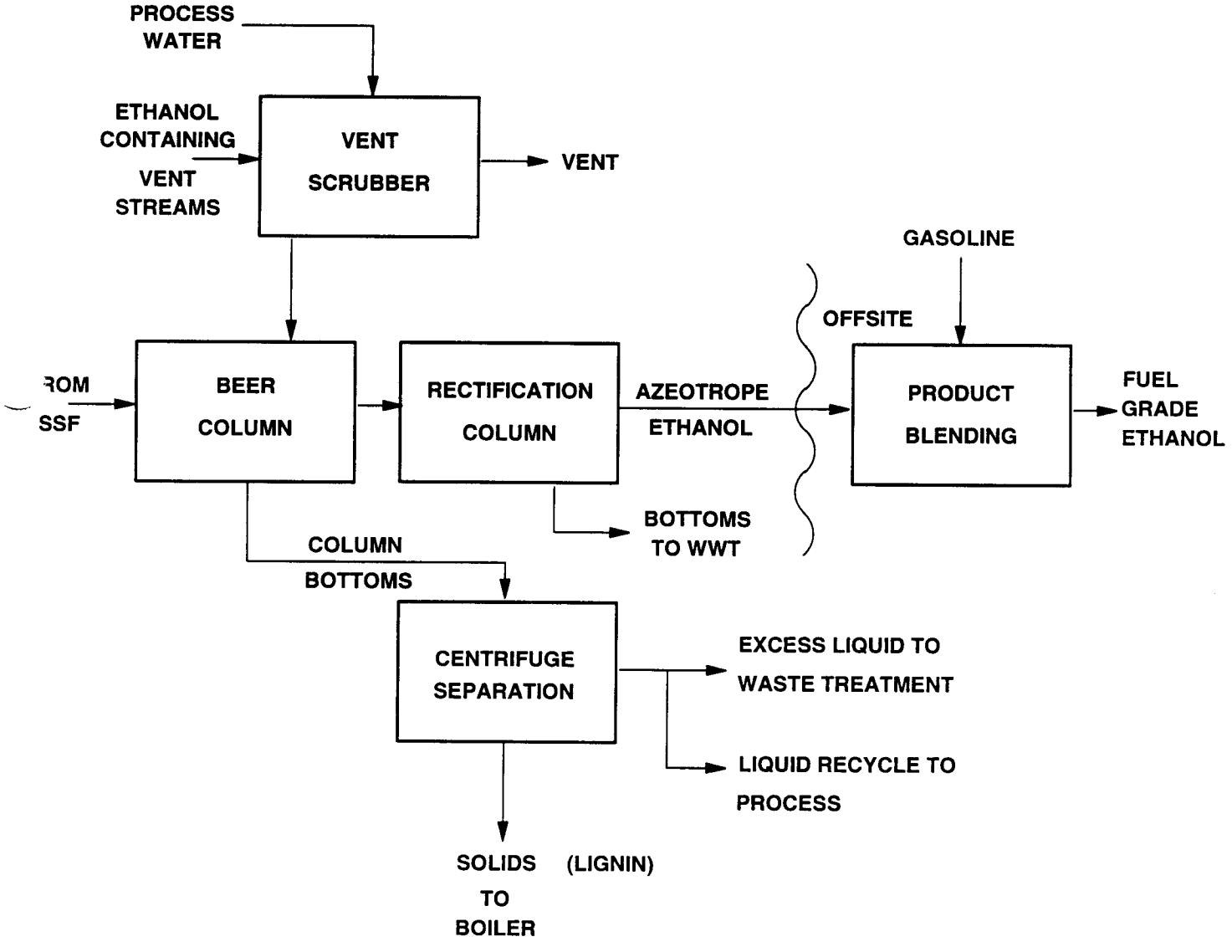

The bottoms are used to preheat first the scrubber column waters (TT-625), then the main feed to the beer still, (TT-629). The bottoms, now at about 124°C, are further cooled to 113°C (TT-628) in order to prepare the flow for lignin separation.

The overhead vapor from the beer still is used to reboil the bottoms of the rectification still via TT-622. The reboiler does not consume the entire duty of the overheads, hence a trim cooler (TT-624) is also supplied for startups and trim conditions. The condensed overhead product is then sent to the rectification still.

5.2%?

The rectification still (AS-602) purifies the 66 percent ethanol to near azeotropic concentration; the overheads are 94.7 percent ethanol by weight, 53 percent water and the remaining 0.1 percent impurities. The column operates at 105 kPa, with 68 (actual) trays and a reflux ratio of 4. The overhead product is sent to ethanol storage prior to gasoline blending. The bottom product, specified at less than 100 ppm ethanol, is sent to wastewater treatment. The column also has a purge stream, set at 2 percent of the vapor leaving the top tray. This purge, which is sent to the boiler as waste fuel, is to prevent the buildup of acetaldehyde and other light impurities present as fermentation byproducts.

Fusel oils, which are a complex mixture of isoamyl, amyl, and branched four and five carbon alcohols, collect in the rectification still. They show a tight solubility profile, and typically form a separate phase somewhere between trays 15 and 20 of the rectification still. This separate fusel oils phase is decanted off the column to prevent buildup and subsequent carryover into the ethanol overheads. The fusel oils are first cooled with cooling tower water (TT-607) then sent to the fusel oil washer (T-603). The fusel oils are washed with 5 kg water per kg fusel oils to recover any entrained ethanol. The light phase fusel oils are then decanted off to the boiler for use as recovered fuel via the fusel oils pump (PP-605). The water phase is returned to the rectification still for ethanol recovery via the washwater return pump (PP-604).

The beer still bottoms are combined with sump solids from the recycle water tank (T-630) and sent to the lignin centrifuge (GC-609A/B/C). The centrifuge recovers 95 percent of the solids, and produces a 40 weight percent slurry. The concentrated solids are screw conveyed (GS-611) to the boiler (HB-901), where they are used as the main fuel source for the plant. Waster overflow from the centrifuge is sent to the recycle water tank (T-630), where it is mixed with fresh process water to cool the recycle water and provide

makeup. The recycle water is then split off: 50 percent to wastewater treatment, and the remaining 50 percent recycled back to prehydrolysis, xylose seed fermentation, cellulase seed fermentation and SSF seed fermentation. It is assumed recycle water contains adequate nutrient load for cellmass growth in the seed fermentation areas.

D. PROCESS DESCRIPTION: OUTSIDE BATTERY LIMITS (OSBL)

1. Tank Farm: Area 800

Ethanol from the bottom of the stripping still (AS-603) is sent for storage to the ethanol product tanks (T-701A/B). These tanks have storage capability of 10 days production. Prior to storage, the ethanol is in-line blended with five percent gasoline by weight via blending pump (PP-710). Gasoline is delivered by truck or railcar to tankage (T-710), sized for 10 days storage. Denatured ethanol fuel is pumped to point of sale by the ethanol product export pump, (PP-701).

Corn steep liquor, used as feed for cellulase production, is delivered to the corn steep liquor storage tank (T-720) from truck or railcar. Storage capability is set at 30 days. The transfer pump (PP-720) delivers corn steep liquor from the storage tank to the media preparation tank (T-400).

Concentrated sulfuric acid (typically 93 percent) is delivered by railcar or truck to the sulfuric acid storage tank (T-703), where a nine day supply is kept. The tank is kept under positive pressure from dry process air to keep moisture from the outside air out. The sulfuric acid transfer pump (PP-703) delivers sulfuric acid to the sulfuric acid day tank (T-201).

Liquid ammonia is supplied by railcar or truck to the liquid ammonia storage tank (T-706), where four days supply is kept. Liquids ammonia is then supplied to the ammonia day tank (T-321) via the ammonia transfer pump (PP-706) as needed.

Corn oil, the antifoam agent used during cellulase production and SSF, is delivered by railcar or truck to the corn oil storage tank (T-707), sized for 21 days storage. Antifoam is pumped via the antifoam delivery pump (PP-707) to the antifoam tank (T-403).

Diesel fuel for the mobile equipment is delivered by truck and stored in the diesel fuel tank (T-708). The tank is sized for 14 days storage. Fuel is delivered to the mobile equipment via the fuel pump (PP-708).

Fire water is supplied by the process water system, and stored in the fire water tank (T-704). The fire water system is pressurized by the fire water pump (PP-704).

2. Wastewater Treatment: Area 800

The wastewater treatment area consists of anaerobic digestion, which accomplishes the majority of organic wastewater contaminant destruction, and an aerobic treater which polishes the remaining wastewater for utility water recycle.

Wastewater from the lignin separator (PP-631), the Clean-in-Place operations, and the still feed preheater (TT-615) are sent to the equalization tank (T-803). The anaerobic digester feed pump (PP-808) sends hot wastewater through a cooler (TT-802), lowering the temperature to 35°C, before sending it to the anaerobic digester (T-804). The offgases, mostly methane and carbon dioxide, are sent through a capture/condensation system to knock out entrained liquids and solids. The gases are then sent to the boiler for use as auxiliary fuel. The digester converts 90 percent of all the organics present, except for lignin, for a biogas yield of 0.8 kg biogas per kg organics. The remaining 0.2 kg is used for cellmass growth. Biogas is 70 percent methane, 30 percent carbon dioxide. Processed wastewater from the digester is sent to a surge drum (MS-805) and pumped via the recycle pump (PP-809) to the aerobic biotreater (T-807). A portion is recycled back to the anaerobic digester.

Not the case in full report

The aerobic biotreater removes the remaining Biological Oxygen Demand (BOD) and Chemical Oxygen Demand (COD) from the wastewater. Combined with mother liquor from the sludge centrifuge (GC-801), the wastewater from the anaerobic digester is fed to the aerobic biotreater (T-807). Oxygen from a PSA unit is fed via aerators (GV-807). Oxygen feed is set at 1.5 times ThOD (Theoretical Oxygen Demand). The tank is open-air; no vent gases are captured. All organics except lignin are considered to be fully consumed, with no cellmass growth. Liquids from the aerobic biotreater are mixed with overflow from the sand filter backwash and boiler blowdown and fed to the secondary clarifier (GV-808). Overflow from the clarifier is sent to the process water tank (T-901) via pump PP-816 for storage prior to recycle.

Why?

Clarifier sludge is pumped (PP-813) to the sludge centrifuge (GC-801). Mother liquors from the centrifuge are recycled to the aerobic biotreater, while concentrated sludge is screw-fed (GS-801) to the boiler for use as fuel. The centrifuge is estimated to concentrate the sludge to 40 percent, with 95 percent recovery of the solids.

Soluble solids composition has been estimated to be $CH_{1.48}O_{0.19}$.

3. Utilities: Area 900

(a) Co-Generation System

The plant is designed with a boiler/power co-generation system which allows for the co-production of steam and electricity using a high pressure steam turbine. The system consist of a fluidized bed boiler for waste stream combustion and high-pressure steam generation, a dryer/baghouse unit to reduce the moisture content of the waste streams and remove particulate matter from the flue gas, a turbogenerator with steam extraction, a turbine exhaust steam condenser, a boiler feedwater preparation system and a make-up water treatment system.

Light organics which may be present in the waste stream from the dryer may require a scrubber to strip these components from the flue gas. It has been assumed that for this study that these elements are not present and the scrubber has not been included in the design.

Electrostatic precipitators (ESP) were considered for removing the particulate matter from the flue gas based on their proven technology (used in approximately one-third of the wood-burning power generators in the U.S.) along with cyclones, bag filters and wet scrubbing. However, since none of the proven methods for removing particulate matter are perfect and at NREL's request, we have used bag-filters as the basis.

The 10,300 kPa (1,500 psig) steam boiler is designed to burn gaseous and solid fuels (in slurry form) derived from the various organic waste streams in the process. The fuel compositions are shown in Table III.D.1. Lignin account for a majority of the energy in the fuel streams fed to the boiler. Other components that provide a significant portion of the energy are cellulose, soluble solids, cell mass and ethanol.

Gaseous fuels are fed directly to the boiler burners, but wet solids are first sent to a drying system that dries and fluidizes the solids into the boiler using boiler flue gas.

The steam and power generation capacities are sized in accordance with the wood fed rate. The steam turbine is an extracting type which allows for extraction of 50 and 150 psig steam to meet internal process requirements with the balance condensed to maximized the turbine output.

TABLE III.D.1
FUEL COMPOSITION
(kg/Hr)

Component	Liquid (Slurry)	Vapor
Cellulose	3,289	-
Xylan	175	-
Arabinan	13	-
Mannan	93	-
Galactan	27	-
Glucose	-	-
Xylose	92	-
Arabinose	7	-
Mannose	-	-
Galactose	-	-
Ethanol	2	450
HMF	-	2
Furfural	766	48
Glycerol	332	-
Lignin	17,406	-
Soluble solids	4,012	-
Cellmass	2,603	-
Cellulase	-	-
Acetaldehyde	1	6
Fusel oils	-	15
Methane	-	1,423
Inerts	25,476[1]	88,476[2]

[1] Water, gypsum and ash
[2] Water, air and carbon dioxide

Based on a steam turbine feed rate of 225 metric tons (497 thousand pounds per hour) of 510°C (superheated) 10,300 kPa steam and extraction of 116 metric tons (256 thousand pounds per hour) of 1,034 kPa (150 psig) and 39 metric tons (87 thousand

pounds per hour) of 345 kPa (50 psig) steam, 38.1 megawatts of power are generated. With total plant demand of 19.4 megawatts, this results in a 18.7 megawatts power surplus which can be sold. The complete steam balance is provided in the Appendix.

(b) Cooling Water

The cooling tower is sized to provide maximum peak cooling rates for the plant, plus a 20 percent design factor. The cooling tower (GT-912) provides cooling water at 30°C, with a maximum allowable temperature rise of 14°C. Pressure in the system is maintained at 515 kPa via the cooling water circuit pumps (PP-912A-F). Cooling tower blowdown containing dissolved salts and other contaminants is discharged to an evaporation pond.

Cooling tower losses are estimated at 4.3 percent total: 1.3 percent for evaporation, 0.3 percent for wind losses, and 2.7 percent for blowdown based on the 1991 SERI report.

(c) Chilled Water

The chilled water system is a single pass refrigeration system, using HCFC-131a (or ammonia) as the main coolant. The chilled water package (PK-950) supplies chilled water at 10°C, with a maximum allowable rise of 8°C. The package is sized for the required refrigeration duty, plus a 20 percent design factor.

(d) Plant and Instrument Air

Plant and instrument air are provided by the Process and Instrument Air Compressor (PC-910), which supplies the P&I system with 790 kPa air. The compressor receives air through a filtration system. The compressor charges the air receiver (MS-906), which sends air to the plant air receiver (MS-907) via the instrument air dryer (GY-910). The dryer is specified to supply air with a dew point of -80°C.

(e) Sterile Air

Sterile Air for fermentation is supplied by the sterile air package (PK-950A/B/C). The package supplies air based on requirements plus a 20 percent design factor. Air is

cooled to 28°C by intercoolers (included, refrigeration duty supplied by chilled water) and sent through a filtration system prior to fermentation users.

(f) Process Water

Well water is pumped (PP-913) through a sand and anthracite filter (GF-901). Filtered water is then pumped (PP-902) to storage in the process water tank (T-901). Backwashing of the filter is accomplished using process water via backwash pump PP-904. Backwash is collected in the backwash transfer tank (T-905) before transport by pump (PP-905) to the secondary clarifier (GV-808). The process water main is supplied by the process water circulating pump (PP-903).

(g) Clean In Place and Chemical Sterilization System (CIP/CS)

The CIP/CS system is designed to clean and sterilize fermentation tanks between batches and other downtimes to minimize the need for manual cleaning.

Sterile tanks and fermenters are cleaned prior to use by hot water, which has been held for 15 minutes in the water sterilizer (TT-953) at 115°C using LP steam. The water is then held in the sterile water tank (T-953) prior to use. The sterile water pump (PP-953) feeds sterilized water to users on demand, rinsing the user prior to CS.

Cleaning chemicals are mixed with the sterilized water in the cleaning tank (T-961). The solution is pumped on demand using the CS pump (PP-960). Spent cleaning solution is returned to the cleaning tank via the CIP/CS sump pump (PP-965A/B/C/S), one for each user. The vessel is then rinsed a second time with sterile water; the water is sent to wastewater treatment. The process is repeated twice: rinse, CS, rinse, CS, rinse. Periodically the cleaning solution is dumped to wastewater treatment via the supply pump (PP-960).

No design data was available for the CIP/CS system; the sizing was arbitrarily set at 10,000 gallon hold tanks, for an average flow rate of 150 kg/h.

IV BASIS OF MODEL DESIGN

A. SIMULATION SYSTEM

Chem Systems modelled the biomass-to-ethanol process using CHEMCAD version 3.03-386, a continuous process simulator for PC computers from Chemstations Inc. of Houston, TX. CHEMCAD offers a multitude of unit operations, including solids handling capabilities, a wide array of thermodynamic options and a large component database with the ability to add user-defined components.

CHEMCAD also has a graphical interface to draw process flow diagrams. This has been used by Chem Systems to draw the process PFDs.

The utility generation units and the economic and capital and production cost estimates have been modelled in Lotus 1-2-3, and are described in Section V.

Physical property data for the solids, liquids and gases are shown in Appendix VI.

B. PROCESS MODEL

1. Model Architecture

The model has been split into four separate CHEMCAD simulations: "BASE-ALL", "ETOH-2", "BASE-ETH" and "BOILER". "BASE-ALL" simulates area 200, 300, 400, 500 part of 600, and 800. "BASE-ETH" simulates the scrubber of area 600. "ETOH-2" simulates the ethanol purification steps of area 600. "BOILER" simulates the recovered fuel feeds which will feed the boiler/co-generation unit (simulated on-line in the Lotus 1-2-3 model). "BASE-ETH" simulates the ethanol vent scrubber.

This artificial split was necessitated by the occurrence of many user-defined components in the system. Distillation operations are difficult to model, and the presence of user-defined components, as well as any other process configuration that encourages non-ideal separations, can slow down solutions or even prevent convergence. Since the user-defined components lacked any binary interaction parameters, they were not included in the ethanol purification modelling. This is a realistic solution, since the solids ultimately go out the bottom of the beer still and only affect the separation by mildly increasing the reboiler duty of the beer still. This has been accounted for by heating the separate solids stream and adding this duty to the beer still reboiler duty.

The software component database contained all the required binary interaction parameters for the main liquid components affected by the separation, using the NRTL (Non-Random, Two Liquid) liquid activity coefficient model. The only pair not adequately modelled using software data was acetaldehyde/ethanol; for this pair, literature data replaced software-supplied data (via UNIFAC estimates) to yield a more realistic result. See Appendix VI for physical property data.

At this time, the boiler feed streams have been separated; all were a recent addition to the model, and inclusion into the "BASE-ALL" model would have required extensive flowsheet modifications.

Although flowsheets are provided for each area, all flowsheets within a particular simulation model have been hot-linked, meaning any change in one is automatically picked up in others. This provides for overall solutions faster and more accurate as it avoids the need for manual importation of data from one flowsheet to the next.

2. Base Data

User-defined components were added to the CHEMCAD component library, in order to simulate the actual conditions of the biomass-to-ethanol plant. The following user-defined components were added to the component database:

- Cellulose
- Hemicelluloses:
  - Xylan
  - Arabinan
  - Mannan
  - Galactan
- Sugars:
  - Xylose
  - Arabinose
  - Mannose
  - Galactose
- HMF (Hydroxymethyl furfural)
- Ash
- Lignin
- Soluble Solids
- Cellmass
- Cellulase

Because CHEMCAD can only simulate 5 components as solids at any one time, additional user-defined components that were solids were modelled as extremely heavy liquids (T_c=10000°C, P_c=1,000,000 kPa) to simulate the properties of a solid. However, a nominal vapor pressure was still apparent for the user-defined solids; and therefore in many cases Component Separators (an ideal unit operation provided by CHEMCAD) were used to direct the components in the right direction.

Fusel oils are a by-product of sugar fermentation; they are a complex mixture of long-chain-hydrocarbon alcohols. Major components are isoamyl alcohol, amyl alcohol, and isomers of methyl and ethyl propanol. For the simulation, fusel oils were modelled as 3-methyl-1-butanol (isoamyl alcohol), which normally comprises at least 50 percent of fusel oils from poplar fermentation.

Appendix VI lists the physical property data for each of these components. CHEMCAD primarily uses data from the AICHE (American Institute of Chemical Engineering). DIPPR database, and the ACS (American Chemical Society) database. The following components from the CHEMCAD databank were used:

- Glucose
- Ethanol
- Furfural
- Glycerol
- Acetaldehyde
- 3-methyl-1-butanol (fusel oils)
- Air
- Nitrogen
- Oxygen
- Ammonia

3. Reactors

No data ~~was~~ were available on reaction kinetics, nor on reaction equilibria in terms of unit conversions. Process simulators cannot use yield data for process simulation, since such unit operations require reactant conversion to simulate reactions. Since only conversion data based on the 1991 SERI report mass balances was available, all reactions were modelled using stoichiometries in an equilibrium reactor, using a fixed conversion rate.

This method creates a model which is insensitive to changes in reactor conditions, a prime motive force for reaction kinetics. Any changes in residence time, temperature or catalytic or enzymatic activity must be manually evaluated for effects on reaction conversion rates, and the reactor conversion rates changed manually to account for these new conditions. Should NREL in the future wish to have a more robust model, pilot plant and other data will have to be converted into a kinetic function of temperature, pressure, residence time and concentrations for the simulator to dynamically account for reactor conditions in modelling the system.

4. Agitators

The heat of mixing has been simulated using an extremely low efficiency mechanical pump. Since the CHEMCAD version licensed by CSI does not have the capability to model agitators with respect to the heat of mixing, by using a liquid pump unit operation with an efficiency of 0.0001, pressure increases on the order of 1 kPa (<1 percent total pressure) are enough to add the required heat of mixing without increasing significantly the pressure of the stream.

C. AREA DESCRIPTIONS

The following section describes in detail the simulation for each of the flowsheets modelled. This description includes equipment modelled, the model architecture, missing equipment, and other pertinent data.

In all cases, to the extent possible, the current model has retained the same equipment names and numbers from the 1991 SERI report.

The stream numbers in the descriptions have been assigned based on in the following convention: in the case where a stream coincided with the 1991 SERI report flowsheet, the same stream number was used. Where new streams were added, they were given 4 digit numbers, with the first two digits the same as the first two digits of the flowsheet. I.e.: all streams on flowsheet BESSF-210 which were not in the 1991 SERI report are numbered 21XX.

In general, flowsheet numbers correspond to their respective process areas. The flowsheets keep the same convention as the 1991 SERI report; where a SERI flowsheet has been split into multiple flowsheets, suffices "A", "B", etc. have been added, (i.e. BESSF-310 A and B used to be one flowsheet in 1991 report; they are now two). Where new flowsheets appear, a new number has been assigned (i.e. BESSF-821 is a flowsheet that did not exist in the 1991 report). The heat and material balances for all the areas except the distribution section and steam generation can be found in Appendix I. The distillation area material balance is located in Appendix II and the steam balance in Appendix VII. Component balances for ethanol and water are presented in Appendix IV.

1. Area 100

Area 100 has not been simulated on CHEMCAD. The unit operations required in this area are not available on CHEMCAD at this time. The unit operations relate to wood handling, feed and size reductions which for vendor feedback is the most important criteria.

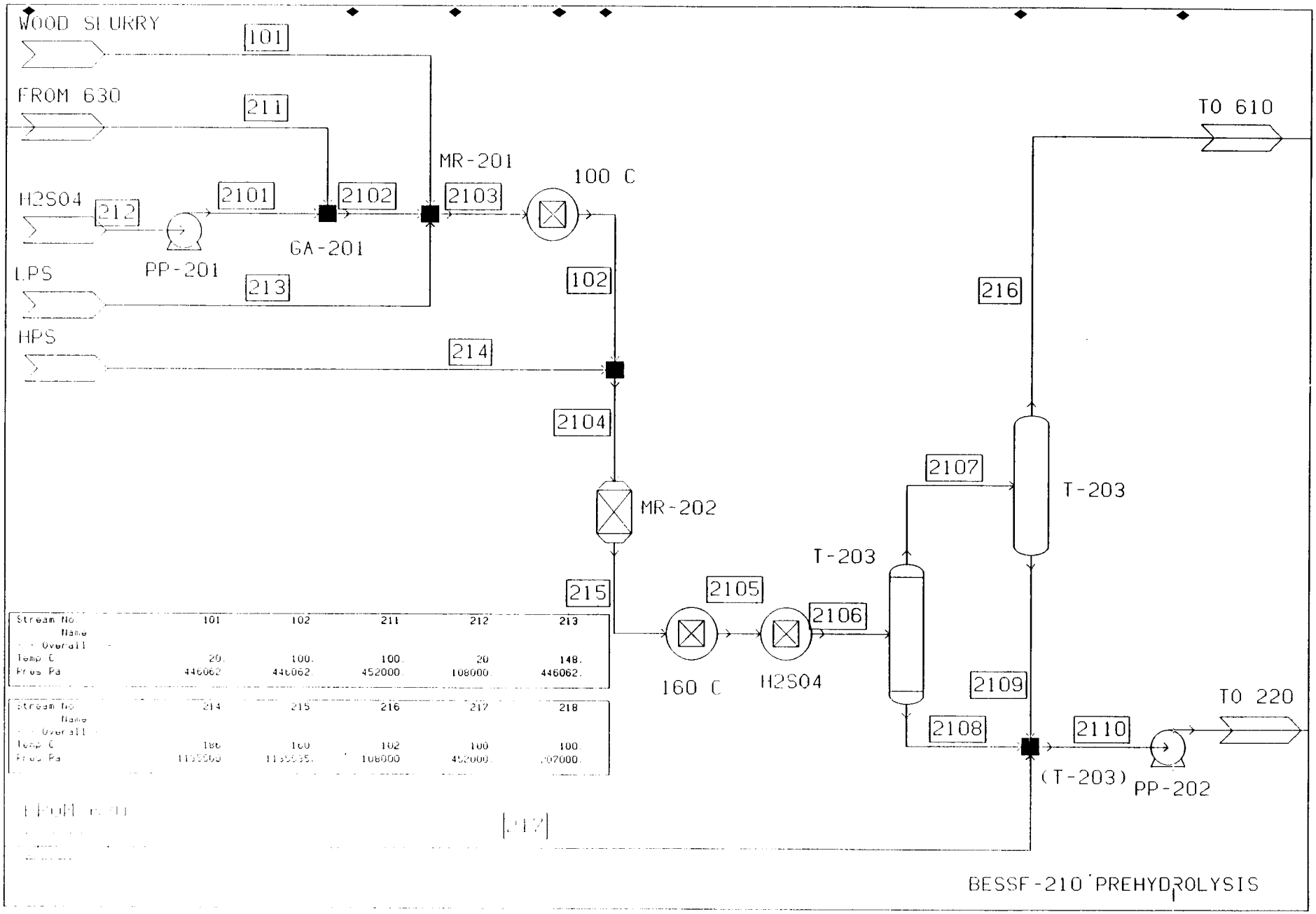

Stream No.	101	102	211	212	213
Name					
- - Overall -					
Temp C	20.	100.	100.	20	148.
Pres Pa	446062	446062.	452000.	108000.	446062.

Stream No.	214	215	216	217	218
Name					
- - Overall -					
Temp C	186	160	102	100	100.
Pres Pa	1155500	1155535.	108000	452000.	107000.

2. Area 200

Area 200 has been separated into two flowsheets:

BESSF-210: Prehydrolysis
BESSF-220: Hydrolyzate Neutralization

(a) BESSF-210: Prehydrolysis

Recycle water (211) from area 600 is mixed with sulfuric acid (pumped from a tank via PP-201) in mixer GA-201. PP-201 supplied enough head to raise the sulfuric acid to recycle water pressure. Recycle water addition has been manually controlled to provide a 35 weight percent biomass to the impregnator reactor.

Initial wood slurry composition (wet basis) was taken as the following:

Water:	50.00 wt%
Cellulose:	23.10 wt%
Xylan:	9.02 wt%
Arabinan:	0.68 wt%
Galactan:	0.52 wt%
Mannan:	1.78 wt%
Lignin:	12.00 wt%
Soluble Solids:	2.80 wt%
Ash:	0.10 wt%
	100 wt%

The dilute sulfuric acid (2102) is then mixed with wood slurry (101) and low pressure steam (213) in MR-201. MR-201 is modelled strictly as a mixer, since the wood hydrolysis reactions are assumed to take place only under the conditions of MR-202. Low pressure steam addition is controlled to raise stream (102) temperature to 100°C.

High pressure steam (214) is added to the impregnated wood, and the resultant mix is sent to MR-202 for hydrolysis simulation. The following reactions have been modelled adiabatically:

Cellulose hydrolysis (3 percent conversion)

$C_6H_{10}O_5 + H_2O \rightarrow C_6H_{12}O_6$

Cellulose (mannan, galactan) degradation (0.1 percent conversion)

$C_6H_{10}O_5 \rightarrow C_6H_6O_3 + 2\ H_2O$

Xylan (arabinan, mannan, galactan) hydrolysis (80 percent conversion)

$C_5H_8O_4 + H_2O \rightarrow C_5H_{10}O_5$

Xylan (arabinan) degradation (13 percent conversion)

$C_5H_8O_4 \rightarrow C_5H_4O_2 + 2\ H_2O$

Two controllers make sure the reactor operates at specification: one for steam addition to insure the flow of (214) is sufficient to keep the reactor outlet at 160°C, and the second to control sulfuric acid flow to 0.85 weight percent (0.156 mol percent) of reactor effluent water.

Two separators model the blowdown tank (T-203). The first is an adiabatic flash at 108 kPa. The second is a component separator to remove the solids, otherwise some of the user-defined solids appear in the vapor stream. The vapor stream is used for heat recovery as beer-still feed preheat (216). The flash bottoms are mixed with recycle water (stream 217) to cool and dilute the stream to 12 weight percent solids.

The recycle water is added after the flash; in reality, the recycle water is mixed in the bottom of the flash tank with the flash liquid. The flash has by that point ended, even though it is still the blowdown tank. Had the recycle water been added with the flash tank in the model, the result would have been a lower vapor flow since the recycle water would have first cooled the reactor products, then flashed the mixture second.

(b) BESSF-220: Hydrolyzate Neutralization

Hydrolyzate from the blowdown tank (stream 218) is mixed with lime. A controller regulates the amount of lime addition (a 50 percent $Ca(OH)_2$/50 percent water slurry from tank T-730) so that calcium hydroxide concentration is zero leaving the neutralizer. In the

future, more accurate data regarding the actual lime neutralization potential will be needed to more accurately assess lime consumption.

The neutralization reaction is modelled in an equilibrium reactor (T-206), under adiabatic conditions, with the following reaction taking place:

Neutralization (100 percent conversion)

$$H_2SO_4 + Ca(OH)_2 \rightarrow CaSO_4 + 2\ H_2O$$

Gypsum, which is hydrated calcium sulfate ($CaSO_4 \cdot 2H_2O$) is not modelled by CHEMCAD. Solubilities are not part of the databank, and can only be used within the context of a crystallizer unit operation, not within streams, to determine how much of a particular solid is as solute or as precipitate. Solubilities will be manually simulated.

From this point downstream, gypsum is modelled strictly in terms of anhydrous calcium sulfate. Water, whether associated with the sulfate or not, is considered part of the water balance only.

The neutralized hydrolyzate is pumped through a cooler (TT-220) to reduce the solution to the required fermentation temperature (37°C) and then split between xylose fermentation and cellulase production. The cooler duty has been increased by 26.8 kW to account for the heat of mixing at 1.5 kW/1,000 gal.

3. Area 300: Xylose Fermentation

(a) BESSF-310A: Xylose Seed Fermentation

The version of CHEMCAD licensed by Chem Systems can only model continuous processes. As such, any batch processes such as seed fermentation or cellulase production have been modelled as continuous processes using hour-averaged flows. Any equipment design will have to take this into account.

Although the xylose seed fermenters are batch, they have been modelled as continuous processes in order to integrate them into the overall simulation model.

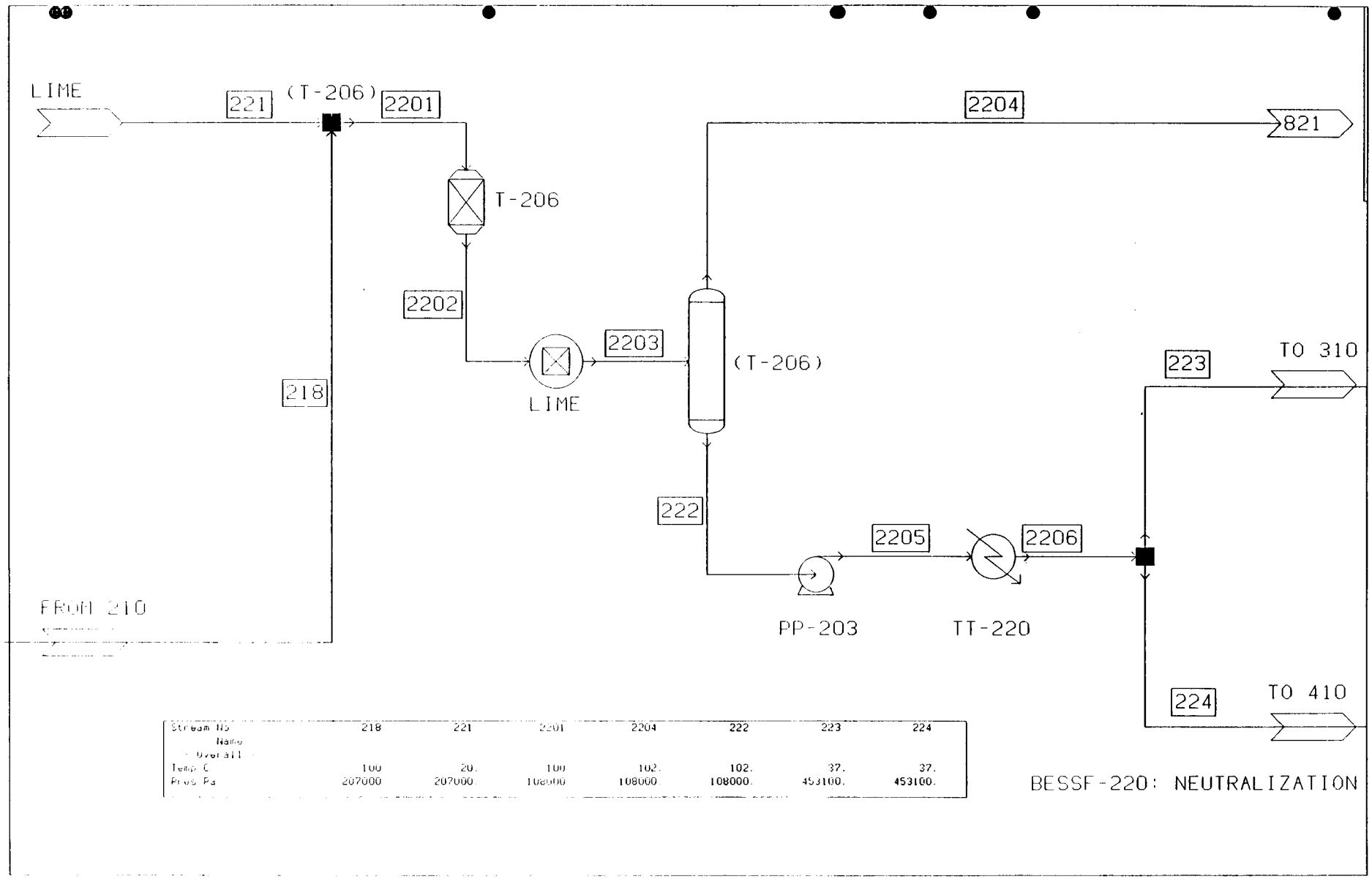

Stream No	218	221	2201	2204	222	223	224
Name							
- Overall -							
Temp C	100	20.	100	102.	102.	37.	37.
Pres Pa	207000	207000.	108000	108000.	108000.	453100.	453100.

BESSF-220: NEUTRALIZATION

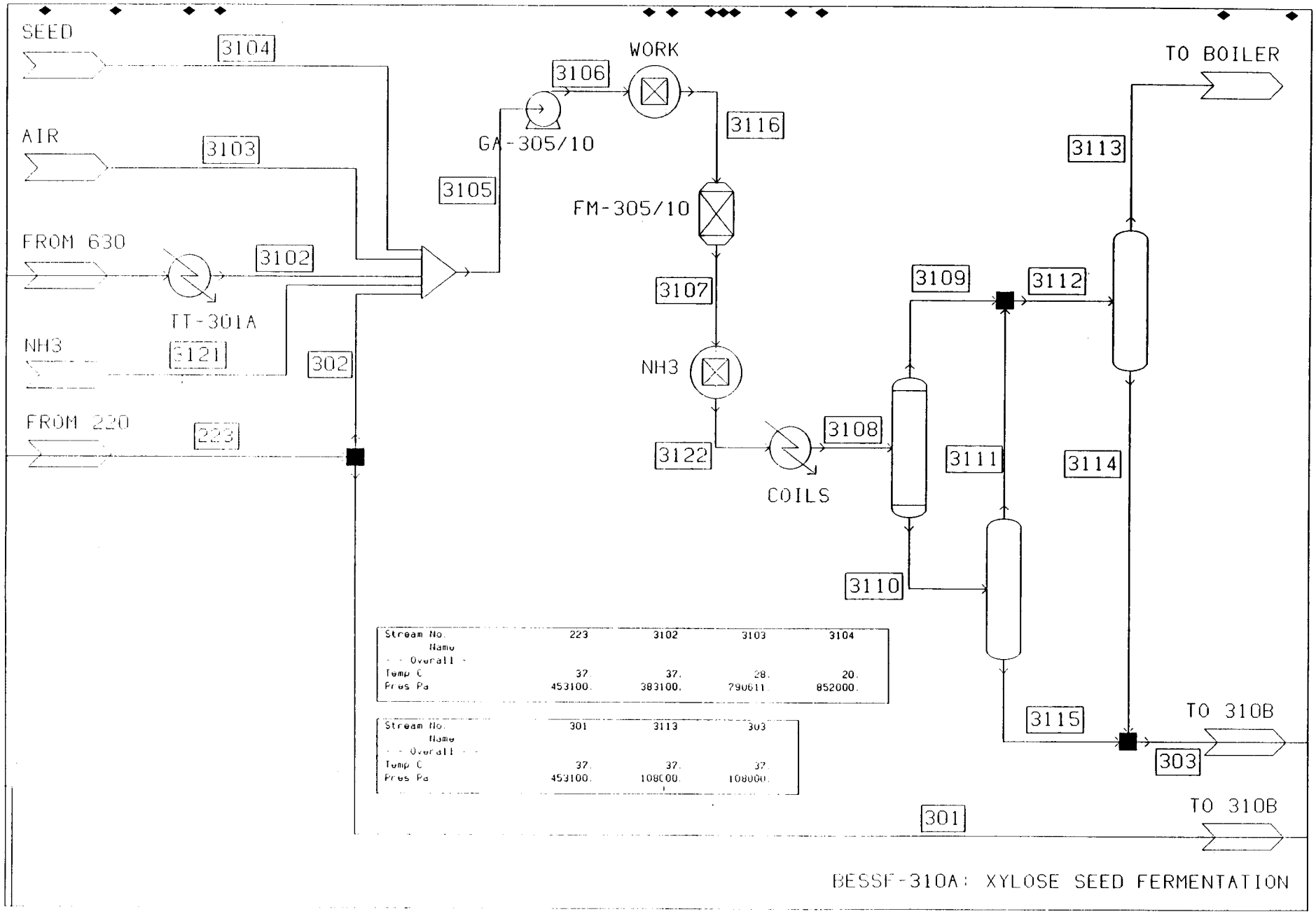
SEED
3104
AIR
3103
FROM 630
3102
TT-301A
NH3
3121
302
FROM 220
223
3105
GA-305/10
3106
WORK
3116
FM-305/10
3107
NH3
3122
COILS
3108
3109
3112
3111
3110
3113
3114
3115
TO BOILER
TO 310B
303
TO 310B
301
Stream No. 223 3102 3103 3104
Name
- - Overall - -
Temp C 37. 37. 28. 20.
Pres Pa 453100. 383100. 790611. 852000.
Stream No. 301 3113 303
Name
- - Overall - -
Temp C 37. 37. 37.
Pres Pa 453100. 108000. 108000.
BESSF-310A: XYLOSE SEED FERMENTATION

Recycle water (cooled to 37°C via TT-301A) is mixed with inoculum, air (0.2 vvm) and ammonia as feed to the xylose seed fermentation. Water addition was manually controlled to supply the specified 2 weight percent glucose and xylose in water.

Since no data was available on acid formation, ammonia consumption for pH control was assumed to be zero. Any ammonia added for neutralization would carry through the process, since no acids would be present to consume ammonia. This ammonia would then act as dissolved ammonia in the simulator, and adversely affect downstream flash calculations, as well as become present in the vents where in reality there is none.

Ammonia was used as the nitrogen source for cellmass growth. This addition was controlled ("NH_3") to insure zero ammonia was left in the reactor products stream.

The agitators GA-305,306,307,308,309,310 were modelled by controlling the pressure increase of the pump as previously discussed.
The seed fermenters have been modelled as a single continuous adiabatic reactor using the following stoichiometries:

C6 sugars (100 percent conversion)

$$100\ C_6H_{12}O_6 + 919\ Air + 89.7\ NH_3 \rightarrow 3.9\ C_{100}H_{164}N_{23}O_{39} + 210\ CO_2 + 415\ H_2O + 726\ N_2$$

C5 sugars (100 percent conversion):

$$100\ C_5H_{10}O_5 + 771\ Air + 74.7\ NH_3 \rightarrow 3.25\ C_{100}H_{164}N_{23}O_{39} + 175\ CO_2 + 346\ H_2O + 609\ N_2$$

This results in a cell yield of 0.5 grams cellmass per gram sugar consumed.

Although the reactor could have been simulated in isothermal mode, CHEMCAD does not model heat sinks or sources within a unit operation. Only the resultant heat necessary to maintain the reaction product temperature at the inlet temperature is provided. Therefore, an external exchanger was provided to simulate an isothermal reactor with heat removal using coils supplied with 10°C chilled water, and assuming a 3°C rise. The reactor exit temperature (simulated as the exit from the heat exchanger) is set at 37°C.

For cell growth, a heat of reaction of -1.08 x 10^6 kJ/kmol glucose converted to cellmass was used. It was also assumed that -1.06 x 10^6 kJ/kmol was the same for xylose and arabinose.

Where from?

The reaction products are then sent through a series of flashes to model the vapor stream coming off the fermenters. This stream is sent to the boiler for incineration.

(b) BESSF-310B: Xylose Fermentation

Seed from BESSF-310A (303) and bypassed hydrolyzate (301) are mixed with ammonia into the xylose fermenters. Similar to the seed fermenters, ammonia addition is controlled to provide a zero ammonia flow out of the reactor, and the pump pressure increase in controlled to simulate heat of mixing.

The following reactions have been modelled in one reactor, under adiabatic conditions:

C6 sugars (85.5 percent conversion):

$$C_6H_{12}O_6 \text{-->} 2\ C_2H_5OH + 2\ CO_2$$

C5 sugars (85.5 percent conversion):

$$3\ C_5H_{10}O_5 \text{-->} 5\ C_2H_5OH + 5\ CO_2$$

No cell growth occurs during anaerobic fermentation has been assumed.

While the SERI 1991 report modelled six fermenters separately for the purposes of estimating ethanol losses via CO_2 entrainment, CHEMCAD results indicate modelling the reactor as six units or one unit makes no appreciable difference in the quantity of ethanol leaving with the vent gases. For simplicity, therefore, this model uses one reactor to model the fermentation. Vent emissions are collected in a manifold and sent to the downstream vent scrubber (AS-604) for ethanol recovery.

External coils again serve to simulate the use of internal cooling coils for isothermal operation to estimate required cooling duty, using 10°C chilled water. Exit temperature is set at 37°C. Heat of reaction for pentose fermentation was set at -6.2×10^5 kJ/kmol pentose sugar consumed, based on Perry's Handbook data.[1]

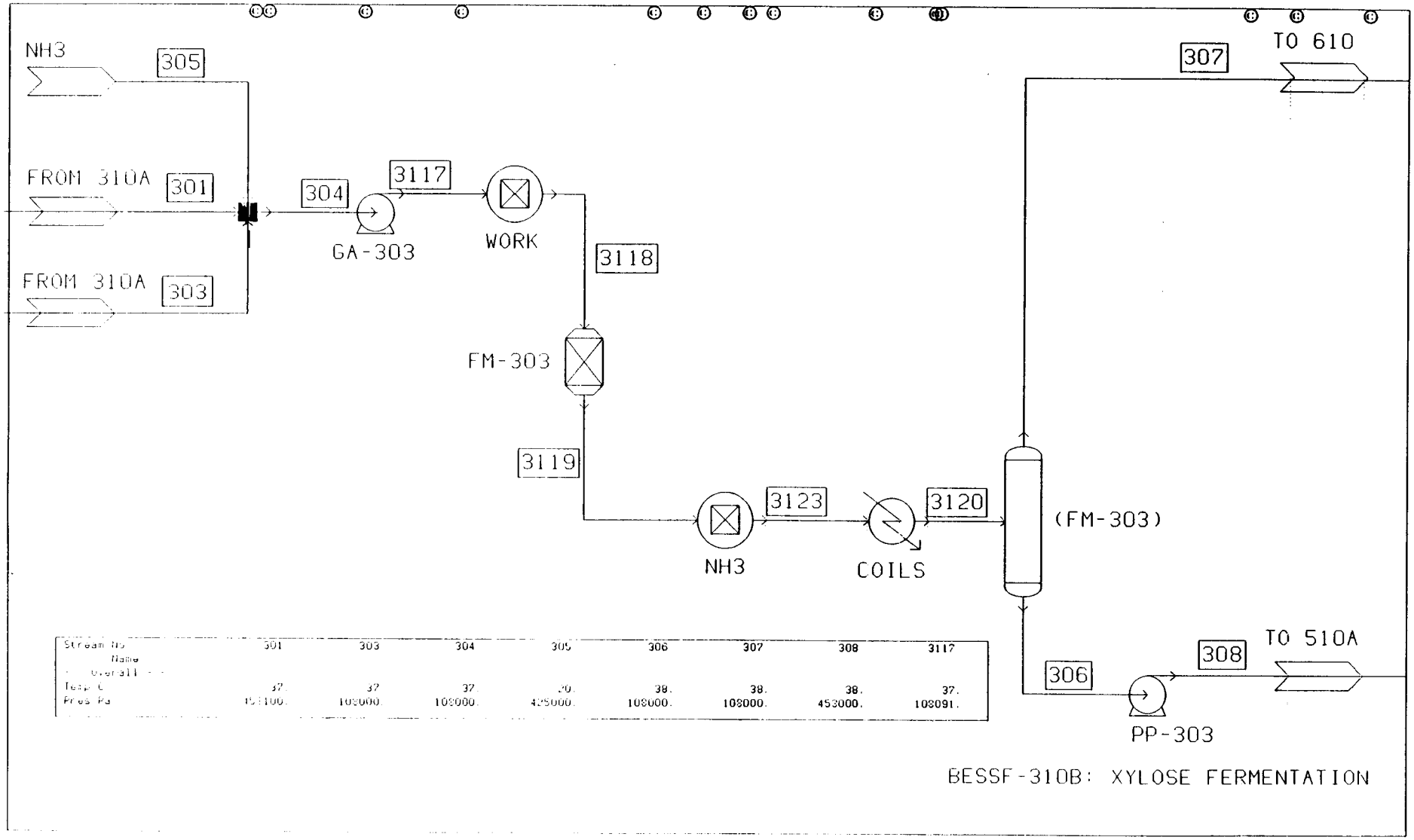

Stream No	301	303	304	305	306	307	308	3117
Name								
Overall								
Temp C	37.	37	37.	20.	38.	38.	38.	37.
Pres Pa	103100.	103000.	103000.	425000.	103000.	103000.	453000.	103091.

4. Area 400: Cellulase Production

The version of CHEMCAD licensed by Chem Systems can only model continuous processes. As such, any batch processes such as seed fermentation or cellulase production have been modelled as continuous processes using hour-averaged flows. Any equipment design will have to take this into account.

Although cellulase production is a batch process, the cycle time is 12 hours, which makes for a simple transition to continuous: all sizes and loads for the continuous model are half actual. This does not affect the simulation, since the material balance was already hourly averaged for continuous material balance reporting.

(a) BESSF-410A: Cellulase Seed Fermenters

Recycle water (4101) is cooled to 28°C in a two step heat exchanger: the first using tower water, the second using chilled water. The cooled recycle water is mixed with air, ammonia, inoculum and neutralized hydrolyzate (224) in the cellulase seed fermenters. The air rate has been set at 0.2 vvm. Ammonia addition has been controlled to give a zero ammonia flow in the reactor products.

As in xylose seed fermentation, the agitator has been simulated using an inefficient pump. Water addition is manually adjusted to provide a 5 percent cellulose/xylose concentration in water.

The following reactions have been modelled in one reactor (FM-401/4), under adiabatic mode:

C6 sugars (100 percent conversion):

$$100\ C_6H_{12}O_6 + 919\ Air + 89.7\ NH_3 \rightarrow 3.9\ C_{100}H_{164}N_{23}O_{39} + 210\ CO_2 + 415\ H_2O + 726\ N_2$$

C5 sugars (100 percent conversion):

$$100\ C_5H_{10}O_5 + 771\ Air + 74.7\ NH_3 \rightarrow 3.25\ C_{100}H_{164}N_{23}O_{39} + 175\ CO_2 + 346\ H_2O + 609\ N_2$$

Cellulose, mannan, galactan (100 percent conversion):

$$100\ C_6H_{10}O_5 + 919\ Air + 89.7\ NH_3 \rightarrow 3.9\ C_{100}H_{164}N_{23}O_{39} + 210\ CO_2 + 315\ H_2O + 726\ N_2$$

Once again, ammonia is used as the nitrogen source for cell growth. It has also been assumed that *T. reesei* has the same empirical composition as *E. coli*.

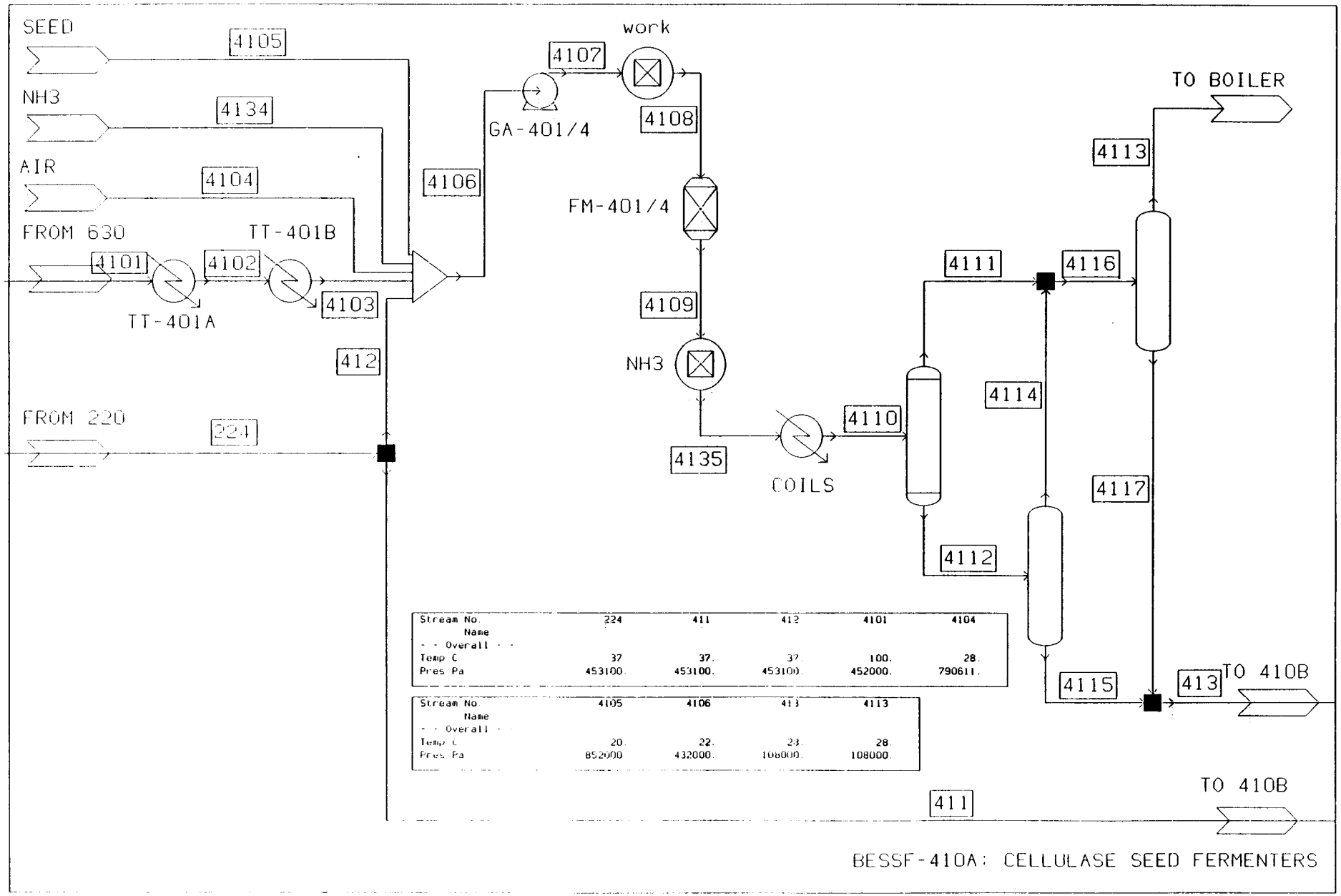

Stream No.	224	411	412	4101	4104
Name					
- - Overall - -					
Temp C	37	37.	37	100.	28.
Pres Pa	453100.	453100.	453100.	452000.	790611.

Stream No.	4105	4106	413	4113
Name				
- - Overall - -				
Temp C	20.	22.	23.	28.
Pres Pa	852000	432000.	108000.	108000.

BESSF-410A: CELLULASE SEED FERMENTERS

External cooling coils simulate chilled water cooling duty. Chilled water rises from 10°C to 13°C, and flow is controlled to maintain exit temperature at 28°C.

After a series of flashes to simulate vent gas composition, the cellulase seed is sent to cellulase production.

(b) BESSF-410B: Cellulase Production

Cellulase seed (413) and neutralized hydrolyzate (411) are mixed with substrate (simulated as glucose), ammonia (nutrient) and air (set at 0.2 vvm. The total air flow was prorated by 5.7/6 to account for batch cycle time.) are mixed into the cellulase fermenters. Again, a pump is used to simulate heat of mixing. Water addition is manually adjusted to provide a five weight percent cellulose/xylose substrate.

The cellulase production fermenters are broken down into two reactors. The first reactor assumes the duty of cell growth, with a conversion of 47 percent. The remaining 53 percent of substrate (cellulose, mannan, galactan, and sugars) is reacted to 100 percent conversion in a second reactor which assumes the duty of cellulase production. This split was done simply for sake of ease, and to better monitor the effects of each set of reactions: cellulase production and cellmass growth.

The first reactor models the following cellmass growth reactions adiabatically:

C6 sugars (32.5 percent conversion)

$$100\ C_6H_{12}O_6 + 919\ Air + 89.7\ NH_3 \rightarrow 3.9\ C_{100}H_{164}N_{23}O_{39} + 210\ CO_2 + 415\ H_2O + 726\ N_2$$

C5 sugars (32.5 percent conversion):

$$100\ C_5H_{10}O_5 + 771\ Air + 74.7\ NH_3 \rightarrow 3.25\ C_{100}H_{164}N_{23}O_{39} + 175\ CO_2 + 346\ H_2O + 609\ N_2$$

The second reactor models the following cellulase production reactions, also adiabatically:

C6 sugars (100 percent conversion):

$$100\ C_6H_{12}O_6 + 1895\ Air + 57.4\ NH_3 \rightarrow 1.98\ C_{100}H_{157}N_{29}O_{31} + 402\ CO_2 + 531\ H_2O + 1497\ N_2$$

C5 sugars (100 percent conversion):

$$100\ C_5H_{10}O_5 + 1490\ Air + 53.1\ NH_3 \rightarrow 1.83\ C_{100}H_{157}N_{29}O_{31} + 317\ CO_2 + 436\ H_2O + 1177\ N_2$$

Cellulose, mannan, galactan (100 percent conversion):

$$100\ C_6H_{10}O_5 + 1895\ Air + 57.4\ NH_3 \rightarrow 1.98\ C_{100}H_{157}N_{29}O_{31} + 402\ CO_2 + 431\ H_2O + 1497\ N_2$$

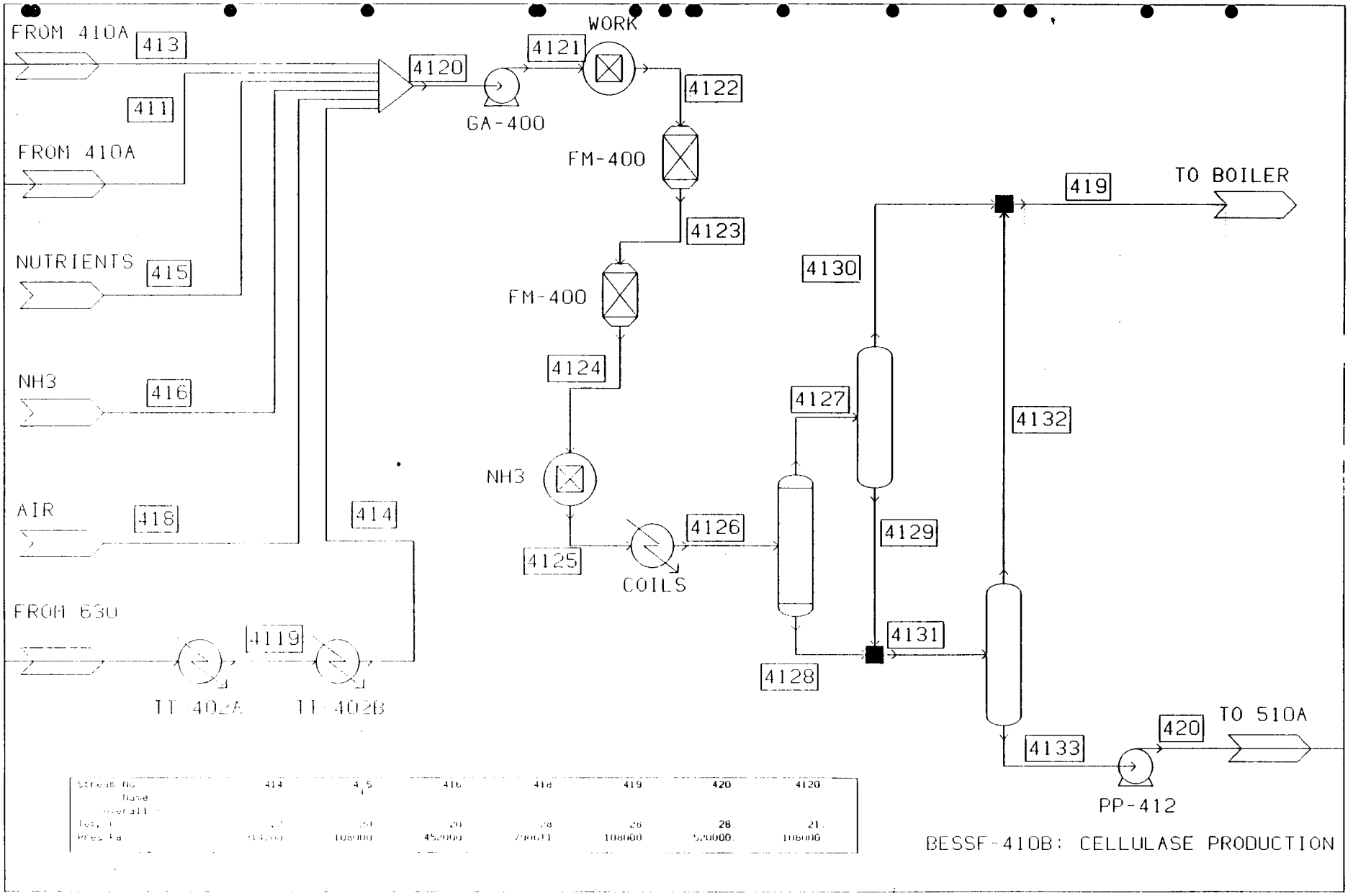

Stream No	414	415	416	418	419	420	4120
Name							
overall							
Temp, C	[illegible]	[illegible]	20	28	28	28	21.
Press, Pa	[illegible]	108000	45,0000	[illegible]	108000	5,0000.	108000

Heat of reaction was manually set at -1.56 x 10^6 kJ/kmol pentose (-4,456 btu/lb); and -1.98 x 10^6 kJ/kmol cellulose.

An external heat exchanger simulates the internal cooling coils, which maintain the reactor exit temperature at 28°C.

After a series of flashes to estimate vent gas composition, the cellulase is sent to SSF.

5. Area 500: Simultaneous Saccharification and Fermentation (SSF)

(a) BESSF-510A: SSF Seed Fermentation

Inoculum, air, substrate (simulated as glucose) and nutrients (simulated as "ammonia") are added with cellulase (420) and feed from xylose fermentation (308). The resultant mixture is heated using the simulated heat addition of the agitator via pump GA-501/6, and sent to the SSF seed fermenter. The air rate, normally 0.2 vvm, was simulated at 0.1 vvm to account for batch cycle times.

The SSF seed fermenter simulates the production of *S. cerevisiae* which is assumed to have the same empirical composition as *T. reesei* and *E. coli*. The following reactions occur in FM-501/6:

C6 sugars (100 percent conversion):

$$100\ C_6H_{12}O_6 + 919\ Air + 89.7\ NH_3 \rightarrow 3.9\ C_{100}H_{164}N_{23}O_{39} + 210\ CO_2 + 415\ H_2O + 726\ N_2$$

Cellulose, mannan, galactan (14.6 percent conversion):

$$100\ C_6H_{10}O_5 + 919\ Air + 89.7\ NH_3 \rightarrow 3.9\ C_{100}H_{164}N_{23}O_{39} + 210\ CO_2 + 315\ H_2O + 726\ N_2$$

An external heat exchanger is used to simulate cooling coils, which maintain the reactor exit temperature at 37°C via 10°C chilled water.

After a series of flashes which used to estimate vent vapor composition, the seed is mixed with all remaining flows which are used as feed for SSF.

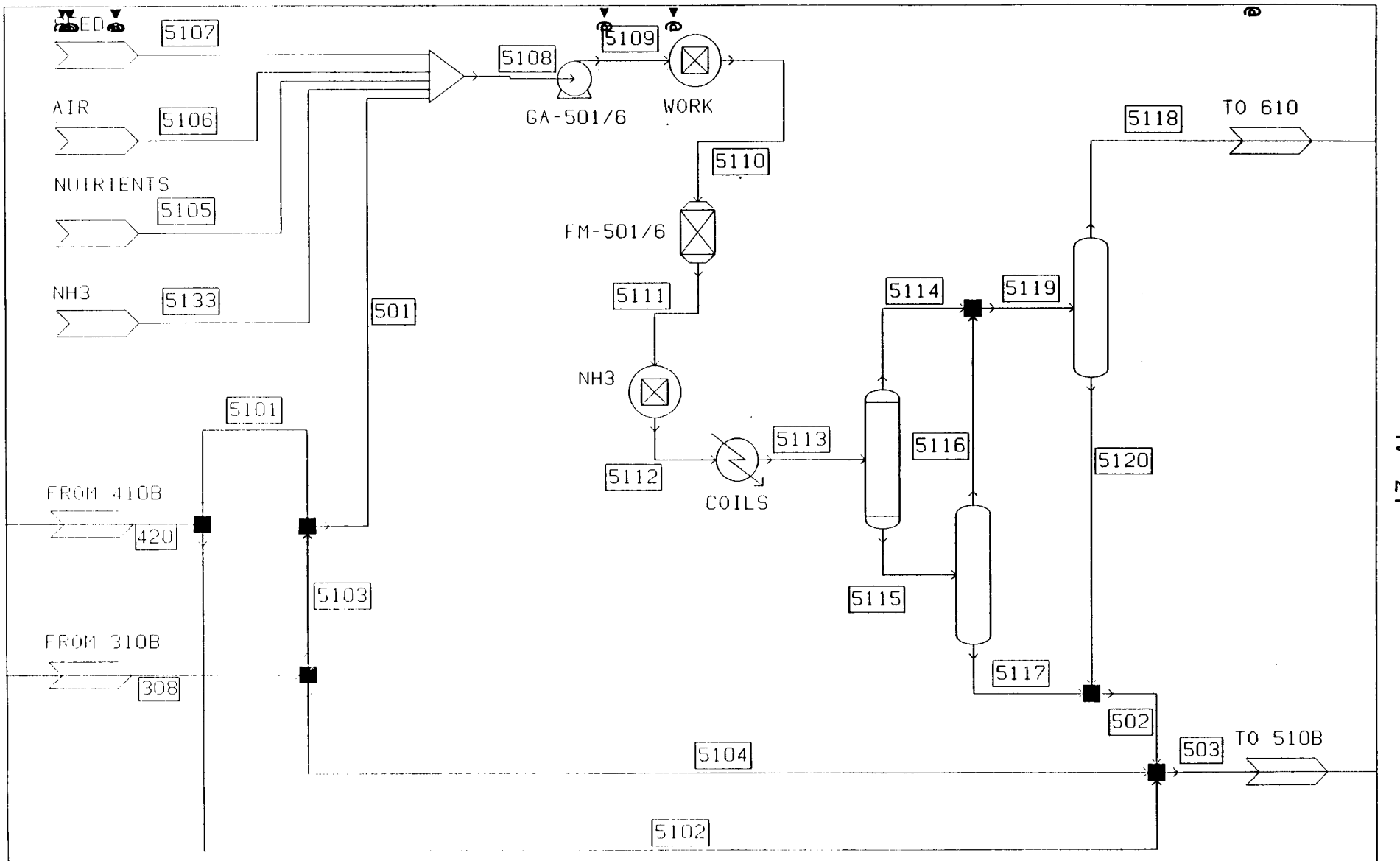

BESSF-510A: SSF SEED FERMENTATION

Stream No	501	502	503	5104	5106	5107	5108	5112	5118
Note									
Over 511									
Temp C	37	37	37	20	28.	0	34.	48.	37.
Press Pa	108000	108000	108000	852000	791000	0.	108000.	109136.	108000.

(b) BESSF-510B: SSF

SSF agitation is simulated using pump GA-500. The heated feed is then passed through the SSF reaction.

The SSF reactor has been divided into two steps: the first hydrolyses the cellulose and hemicellulose components into their respective sugars, and the second step ferments the sugars into ethanol and fermentation by-products. This has been carried out in sequential reactors. Using one reactor would run all reactions simultaneously, and the sugars formed from the hydrolysis step would not be affected by the fermentation reactions.

The first reaction models the following reactions adiabatically:

Cellulose (Mannan, Galactan) hydrolysis (87 percent conversion for cellulose, 80 percent others)

$C_6H_{10}O_5 + H_2O \rightarrow C_6H_{12}O_6$

Xylan (arabinan) hydrolysis (80 percent conversion)

$C_5H_8O_4 + H_2O \rightarrow C_5H_{10}O_5$

The second reactor, also in adiabatic mode, models the following reactions:

C6 sugars (92.0 percent conversion):

$C_6H_{12}O_6 \rightarrow 2\ C_2H_5OH + 2\ H_2O$

C6 sugars, by-product formation (0.5 percent conversion):

$C_6H_{12}O_6 \rightarrow C_6H_6O_3 + C_2H_4O + CO_2$

Fusel oil formation (0.1 percent conversion):

$C_6H_{12}O_6 \rightarrow C_5H_{12}O + CO_2 + 1.5\ O_2$

Anaerobic Cell Growth (7.4 percent conversion):

$100\ C_6H_{12}O_6 + 100\ C_2H_5OH + 46\ NH_3 \rightarrow 2\ C_{100}H_{164}N_{23}O_{39} + 200\ C_3H_8O_3 + 5\ H_2O + 8.5\ O_2$

The nutrient source for cell growth is ammonia, which is controlled to yield zero ammonia flow in the reactor product stream.

Once again, the reactor products are maintained at 37°C using an external heat exchanger to simulate internal cooling coils.

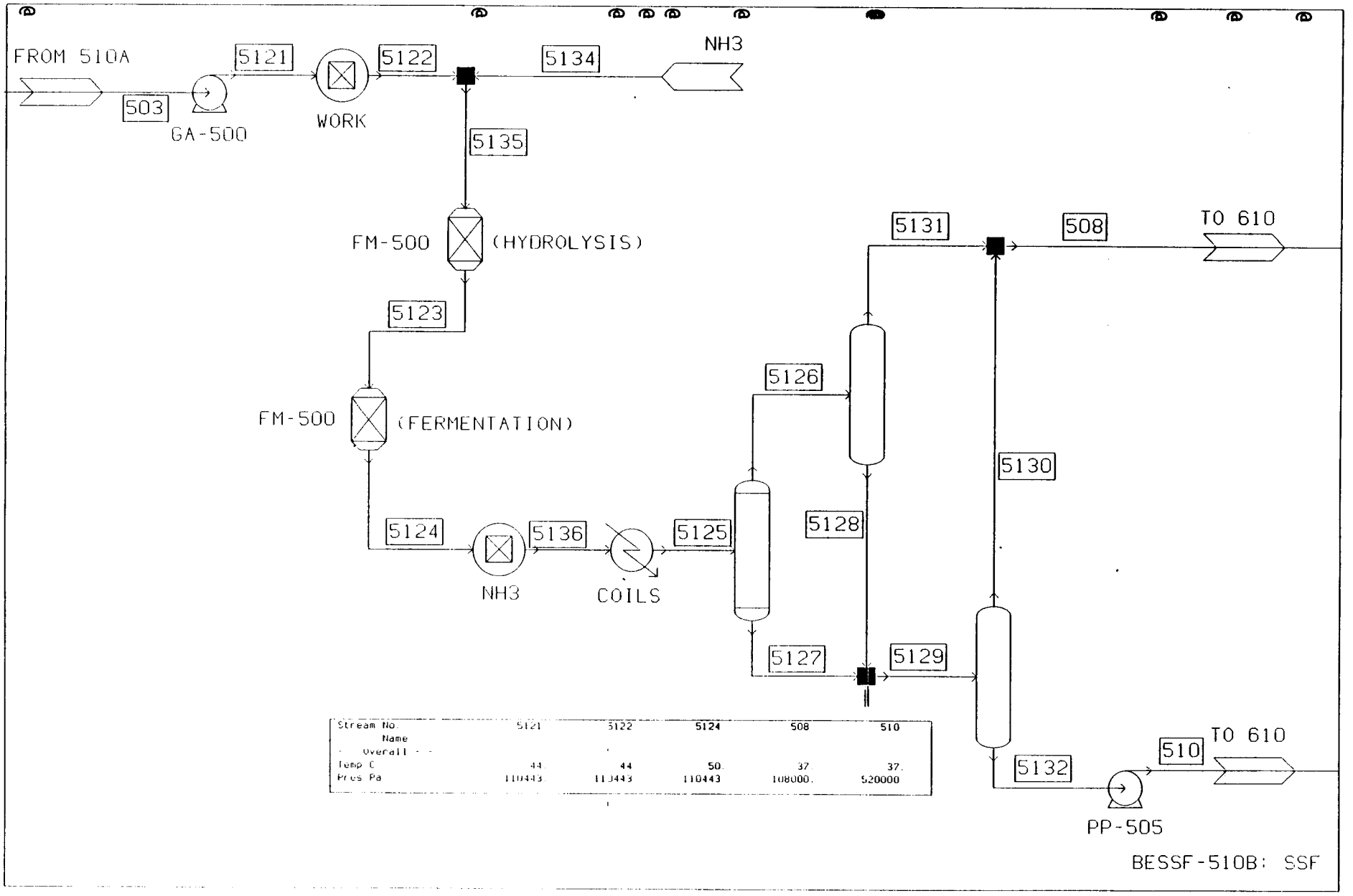

Stream No.	5121	5122	5124	508	510
Name					
- Overall - -					
Temp C	44.	44	50.	37.	37.
Pres Pa	110443.	110443	110443	108000.	520000

After a series of flashes to estimate the vent vapor composition and ethanol losses, the fermented mash is sent downstream for ethanol purification via pump PP-505.

6. Area 600: Ethanol Purification

Part of area 600 was modelled on a different simulator than the first part of the process for reasons described above.

(a) BESSF-610: Degasser

Mash from SSF fermentation (510) is preheated first by using the overhead vapors from AS-602, using TT-623, then by condensing the vapors coming off the prehydrolysis blowdown tank (216), using heat exchanger TT-615. The condensed vapors are sent to wastewater recovery. TT-623 is modelled under a later flowsheet. In this section it serves only as a place-holder. The hot mash is then sent to the degasser drum (T-601) where dissolved CO_2 and part of the light end impurities are flashed off to stabilize the beer still. The vapors are sent to ethanol recovery to capture any lost ethanol.

The liquids and solids at this point are separated into two streams: (6110) and (6107). This is necessary to prevent solids from interfering with the simulation of the distillation area. The solids are be recombined with the wastewater from the beer still in a later step, which already simulates reality. To account for the additional reboiler duty needed to heat the solids up to reboiler temperature, a mock-reboiler has been added to heat the solids stream to 149°C, which is the approximate temperature of the beer still bottoms. The duty of this mock reboiler is added to the beer still reboiler duty.

The liquids are then further separated into fusel oils plus gases, and crude ethanol. Fusel oils do not model well; they form highly non-ideal mixtures with water and ethanol, and as such has not proven possible to model without rigorous VLE data, which is unavailable at this time. They have been diverted away from the distillation units, and the units have been simulated without the fusel oils present. Should robust VLE binary interaction parameters become available for fusel oils in the future, the simulation may be better able to incorporate fusel oil design.

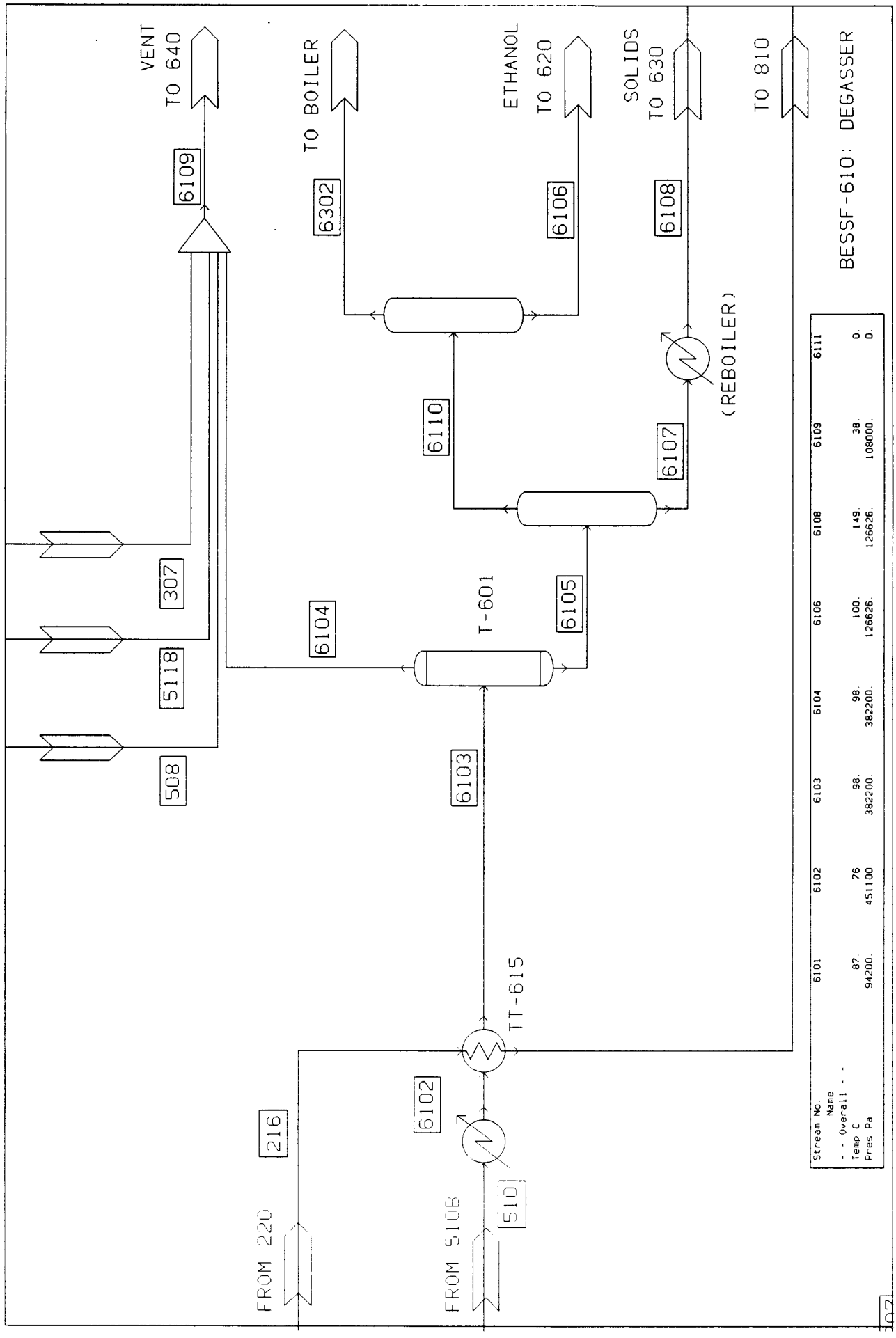
VENT
TO 640
TO BOILER
ETHANOL
TO 620
SOLIDS
TO 630
TO 810
BESSF-610: DEGASSER
6109
6302
6106
6108
(REBOILER)
6110
6107
307
6104
T-601
6105
5118
508
6103
TT-615
6102
216
510
FROM 220
FROM 510B
Stream No. 6101 6102 6103 6104 6106 6108 6109 6111
Name
- - Overall - -
Temp C 87. 76. 98. 98. 100. 149. 38. 0.
Pres Pa 94200. 451100. 382200. 382200. 126626. 126626. 108000. 0.

(b) BESSF-620: Ethanol Distillation

The liquids portion of the SSF mash are then preheated using a set of heat recovery exchangers. Stream 6106 begins at 37°C to model the heat exchangers. The flash drum was simulated previously, since only 5 components (water, ethanol, furfural, glycerol and acetaldehyde) were modelled using "ETOH-2" flowsheets (BESSF-620). It would be between TT-615 and TT-629.

The mash is heated using the overheads from the rectification still AS-606 (TT-623, overhead condenser), then further heated using flash vapors from area 200 (TT-615), further heated using bottoms from the beer still (TT-629), and finally a trim heater to raise the mash to a feed temperature of 120°C. Exchangers were designed for a minimum approach temperature of 5°C.

The column is also fed with water from the vent scrubber (AS-604). These waters are preheated using hot flash condensate (TT-616) and bottoms from the beer still (TT-625), to raise the temperature to 120°C.

The column has been modelled as a vigorous simulations connection distillation (SCDS) unit operation, which is recommended for non-ideal separation. The column was designed to provide maximum separation in 40 stages without exceeding a 4m diameter, which is the maximum width that can be transported by highway. Larger diameters would require site fabrication, greatly increasing costs. Tray efficiency was estimated at 0.6, using sieve trays with 1.9 cm (3/4") holes.

The bottoms of the beer still are specified for 100 ppm ethanol. These are used to preheat the scrubber water and mash feeds to the column before being moderately cooled prior to lignin separation. Solids were not simulated here, for reasons stated above.

The column is operated at 417 kPa (45 psig), so that the temperature can be elevated enough to use the overhead condenser as a simultaneous reboiler for the rectification still. The overhead vapor is at about 123°C, and the bottom of the rectification still is at 113°C. A trim cooler (TT-624) is supplied to account for the entire cooling duty of the column (duties of TT-622 and TT-624 add up to AS-601 cooling duty). Because Chem CAD does not allow heat integration for overhead condensers or reboilers, TT-622 was modelled

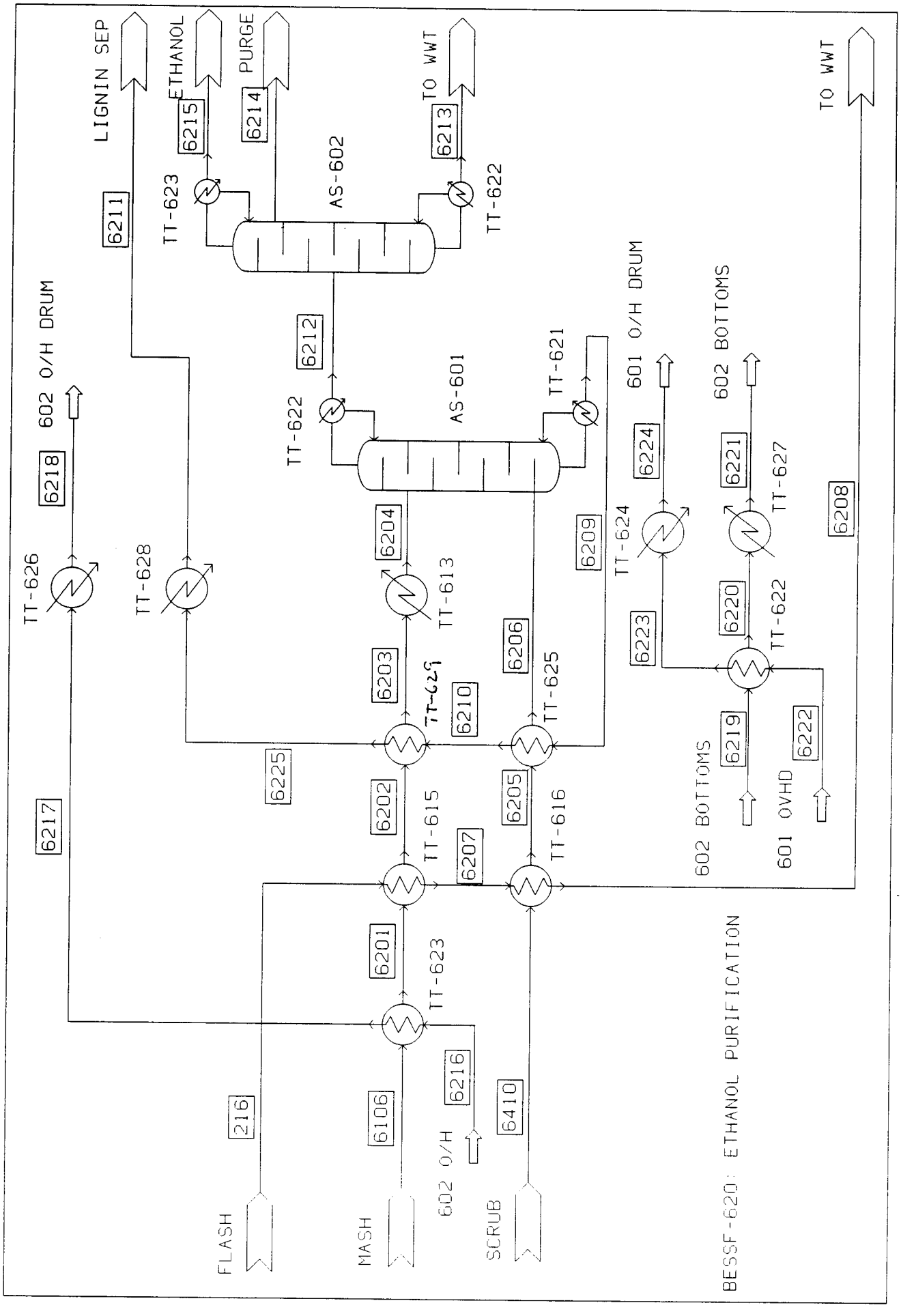
LIGNIN SEP
ETHANOL
PURGE
TO WWT
TO WWT
6215
6214
6213
6211
TT-623
AS-602
TT-622
6212
TT-622
AS-601
TT-621
602 O/H DRUM
601 O/H DRUM
602 BOTTOMS
6218
6224
6221
TT-627
6208
TT-626
TT-628
6204
TT-613
6209
TT-624
6223
6220
TT-622
6203
6206
TT-625
6210
6225
6202
TT-615
6205
TT-616
6207
6219
6222
602 BOTTOMS
601 OVHD
6217
6201
TT-623
6216
216
6106
6410
602 O/H
FLASH
MASH
SCRUB
BESSF-620: ETHANOL PURIFICATION

separately using the vapor from AS-601 stage 2 and liquid from AS-602 stage 69. The pressure of stream 6222 is slightly lower than the top of AS-601 to account for any pressure drop in the vapor to the condenser/reboiler, and to ensure the vapor fraction remained 1 (100 percent vapor at dew point) for proper exchangers simulation.

The overhead product from AS-601 is sent directly to the rectification still (AS-602). The still has 70 stages and is operated at 105 kPa and a reflux ratio of 4. Reboiler duty is supplied by the overhead condenser of the beer still (TT-622) plus a trim heater (TT-627). TT-622 was specified to supply 80 percent of the required duty, with the remaining 20 percent by the trim heater. The overhead condenser (TT-623) is cooled using feed mash (80 percent of the required cooling duty) with the remaining 20 percent of the cooling duty supplied by the trim overhead condenser (TT-626).

The bottoms product is sent to wastewater treatment. The column was specified for a 100 ppm ethanol concentration in the wastewater.

Fuel oil separation was not simulated here for reasons stated above.

Fermentation of biomass creates a multitude of fermentation by-products. These are, but not limited to: acetaldehyde, glycerol, fusel oils, and acetic acid. Except for glycerol, and prehydrolysis byproducts, which have a much lower relative volatility than water with respect to ethanol, these light-end impurities have a tendency to travel with the ethanol.

At first glance, some of these impurities seem heavier than water. However, these impurities are in very low concentrations, are generally immiscible with water. Therefore, when water is present in large concentrations, the relative volatilities of these impurities is higher than ethanol, which drives them out with the ethanol during distillation.

Industry practice is to insert a middle column between the beer still and the rectification still. Water is fed at the top of this column from the fusel oils washing step. This is not only to recover any ethanol entrained with the fusel oils, but to strip out the light ends by a process known as hydroselection: introducing water to force the relative volatilities of the impurities to a level higher than that of ethanol. Thus the overheads from this middle stripping column are the impurities, while the bottoms are ethanol, water and fusel oils, which are sent to further processing in the rectification still.

This design, after much effort, would not converge on CHEMCAD 3.03. The probable cause of non-convergence is the lack of binary interaction parameter for all the light end components, products and water. The highly non-ideal nature of the separation (especially for such pairs as fusel-oils-water, etc.) and the presence of solids, coupled with lack of adequate NRTL data resulted in non-convergence. Until better data becomes available, either Henry's constants, NRTL or other liquid activity parameters, it is better to design the plant on available data than speculate on the basis of other plants.

The near azeotropic overhead product (94.7 weight percent ethanol, 5.2 percent water) is sent to ethanol storage. The column also has a purge: 0.4 percent of the vapor leaving stage 2 (tray 1) is purged to the boiler to prevent buildup of impurities, namely acetaldehyde. With a reflux ratio of 4, 0.4 percent represents 2 percent of the overhead product (0.004 x (4+1) = 0.02), and was chosen because the acetaldehyde concentration was greatest in the vapor from tray 1, and slightly less than 2 percent concentration.

The purified ethanol/water azeotrope is sent to ethanol storage for later blending with gasoline.

(c) BESSF-630: Lignin Separation

Bottoms from the beer still (611) are re-mixed with their solids. This is mixed with any impurities taken out of the fusel oils during washing (6301), and sent to a lignin concentrator (GC-609). Here the lignin is concentrated into a 40 weight percent slurry, to be used as the main fuel feed (631) to the boiler/co-generation unit. An ideal component separator unit operation was used to simulate the centrifuge.

Liquor from the concentrator is pumped and split between wastewater sent to treatment and recycle water. The recycle water is diluted and cooled with process water (634), which is from well water available at 15°C. This recycle water is then sent back to prehydrolysis (211, 217), xylose seed fermentation (3101), cellulase seed fermentation (4101) and cellulase production (4118). The simulation was run three times, for a recycle water composition change of less than five percent.

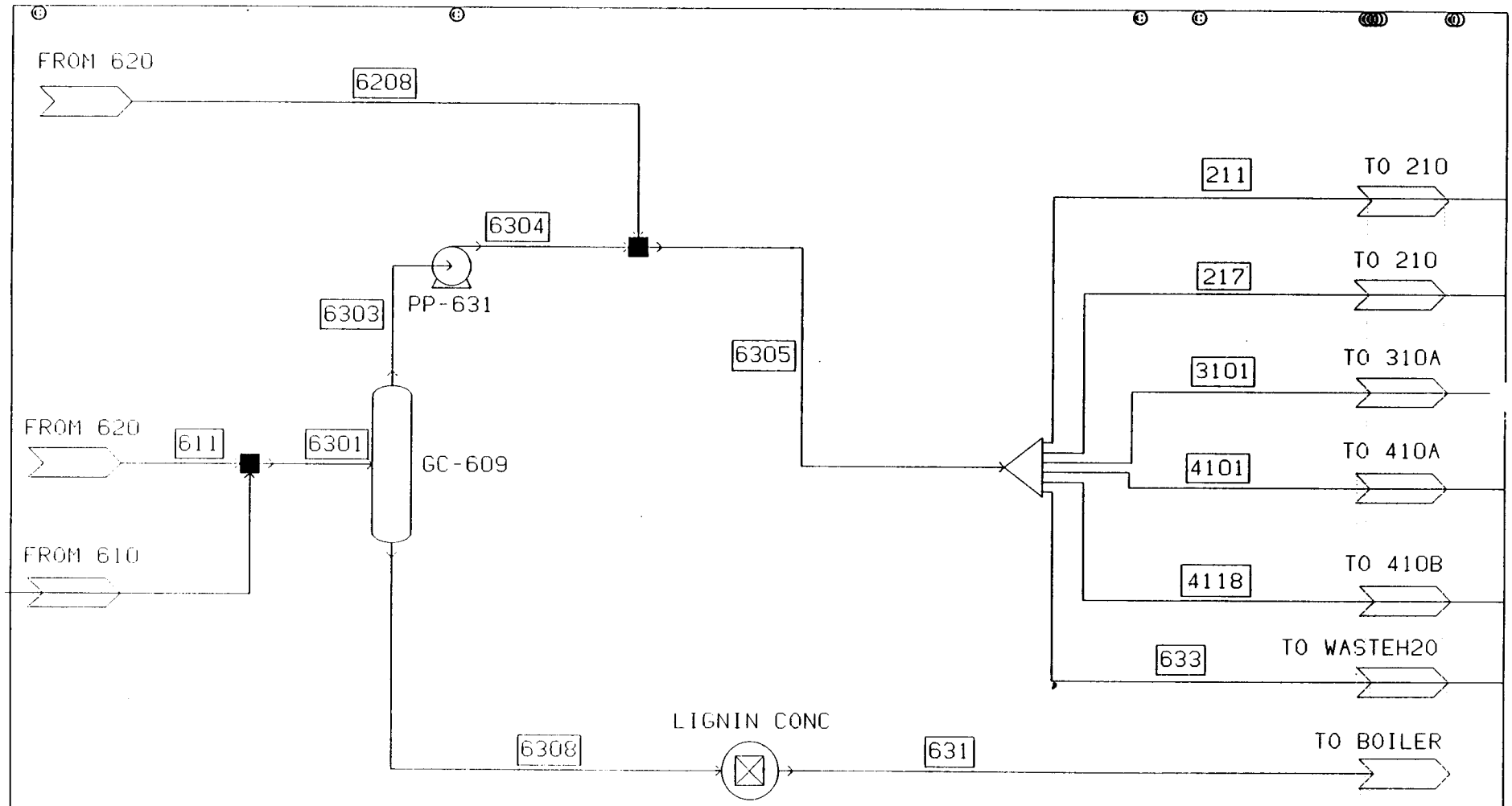

Stream No	6111	611	6108	634	6401	6301	6303	6304	633	6306	631
Name											
- - Overall											
Temp C	0	114	106	15	15.	102.	100.	100.	100.	82.	100.
Pres Pa	0	452000	136626	452000	452000.	108000.	108000	452000.	452000.	452000.	108000.

BESSF-630: LIGNIN SEPARATION

(d) BESSF-640: Vent Scrubber

All ethanol containing vents are directed to AS-604, the vent scrubber. The scrubber is a packed tower which uses cold water in direct contact to condense and recover ethanol lost in the vents. This is much more efficient for dilute recovery streams than vent condensers.

The column has no reboiler or condenser. The water flow to the top is controlled to recover 95 percent of the incoming ethanol. The remaining vapors are passed through K-642, the scrubber blower, and are sent to the boiler for incineration. The blower is designed for an inlet pressure of minus 10 inches water column and an outlet of 15 inches water column. The dilute ethanol in water is sent to the beer still for ethanol recovery.

7. Area 700: Tank Farm

This area has not been simulated but is included in the Lotus 1-2-3 cost model.

8. Area 800: Wastewater Treatment

Wastewater treatment has been modelled to the extent necessary to simulate methane production from anaerobic treatment, since the methane is used as a fuel in the boiler.

NREL provided results from a separate wastewater study, completed by CH2M/Hill[4]. The results of this study have been used as the basis for the wastewater treatment area design, except that the organic loading rate has been doubled to 5 kg/d/m^3.

The area has been broken into two flowsheets: BESSF-810 and BESSF-820, anaerobic biotreatment and aerobic treatment, respectively.

(a) BESSF-810: Wastewater Treatment, Anaerobic Biotreatment

Wastewaters are collected and mixed in the equalization tank (T-803). Ammonia is provided as a nitrogen source for cell growth. The equalized wastes are pumped via PP-808, cooled to 35°C using cooling tower water (TT-802) and sent to anaerobic biotreaters, where a variety of biological agents convert 90 percent of incoming organic material into methane, CO_2 and cellmass.

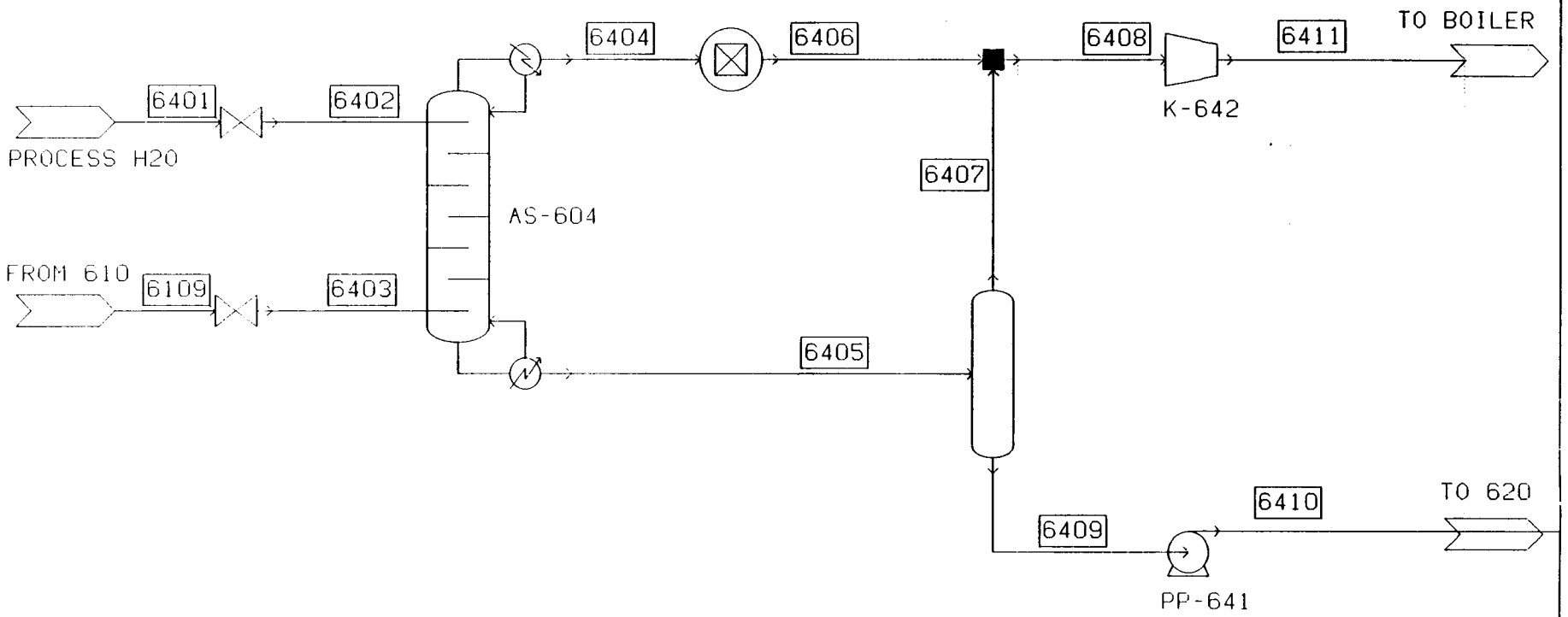

Stream No.	6109	6401	6402	6403	6404	6405	6406	6409	6410	6411
Name										
- - Overall - -										
Temp C	37	15.	15.	36.	29.	37.	29.	37.	37.	39.
Pres Pa	106000	452000.	101000.	101000.	101000.	105500.	101000.	105500.	405500.	108000.

BESSF-640: VENT SCRUBBER

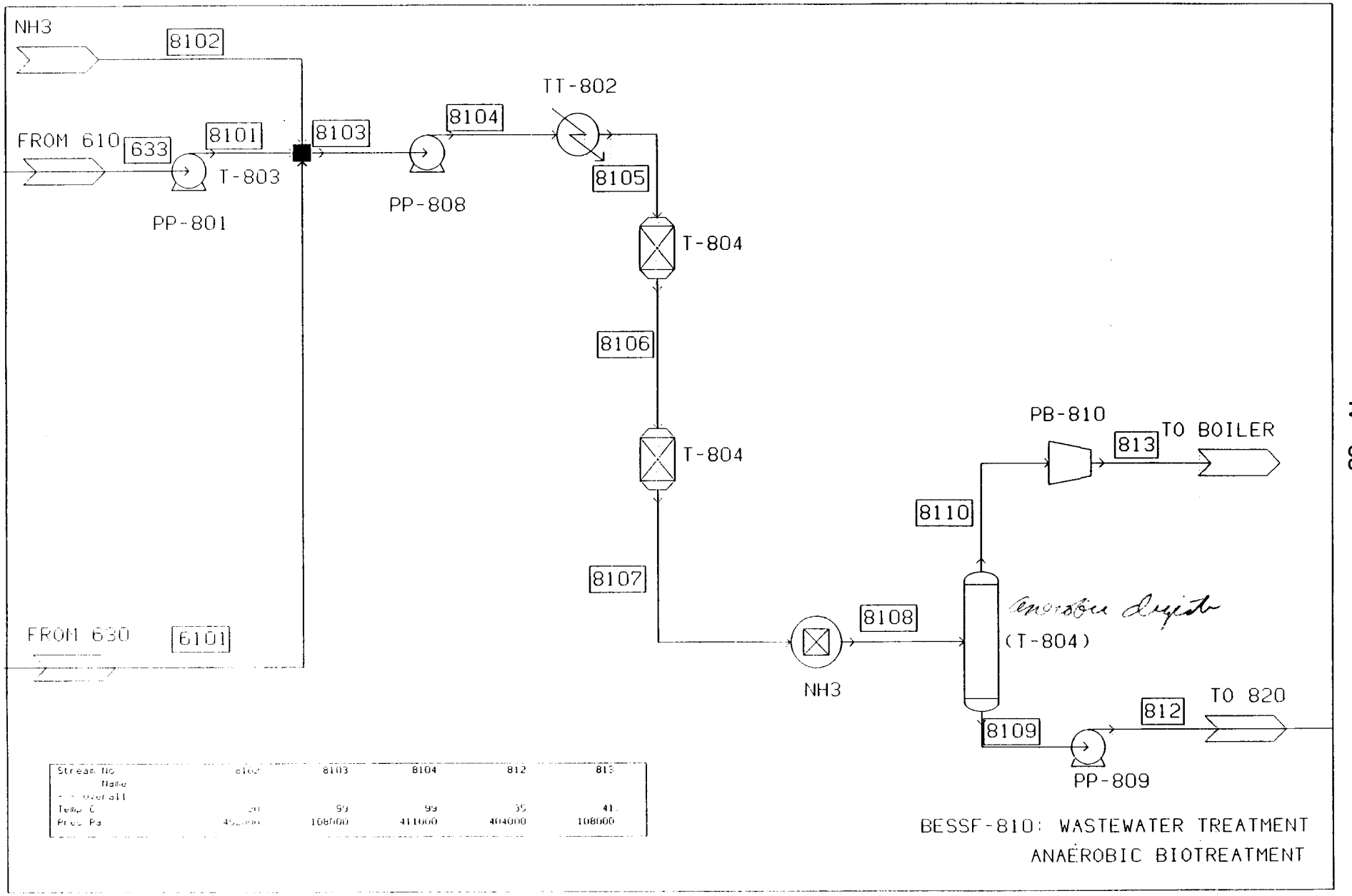

Stream No	8102	8103	8104	812	813
Name					
Overall					
Temp C	20	99	99	35	41.
Pres Pa	45[illegible]	108000	411000	404000	108000

The reactor has been simulated into two parts, since more than twenty reactions occur. Twenty reactions is the maximum that can be simulated in any one reactor in CHEMCAD. Also, since cellmass growth is simulated as using CH_4 and CO_2 as building blocks, using the first reactor for cellmass growth would underestimate the actual cellmass growth rate.

The first reactor simulates anaerobic combustion, using the following reactions:

Cellulose, mannan, galactan (90 percent conversion):

$C_6H_{10}O_5 + H_2O \rightarrow 3\ CO_2 + 3\ CH_4$

Xylan, arabinan (90 percent conversion):

$2\ C_5H_8O_4 + 2\ H_2O \rightarrow 5\ CO_2 + 5\ CH_4$

C6 sugars (90 percent conversion):

$C_6H_{12}O_6 \rightarrow 3\ CO_2 + 3\ CH_4$

C5 sugars (90 percent conversion):

$2\ C_5H_{10}O_5 \rightarrow 5\ CO_2 + 5\ CH_4$

Ethanol (90 percent conversion):

$2\ C_2H_5OH \rightarrow CO_2 + 3\ CH_4$

HMF (90 percent conversion):

$C_6H_6O_3 + 3\ H_2O \rightarrow 3\ CO_2 + 3\ CH_4$

Furfural (90 percent conversion):

$2\ C_5H_4O_2 + 6\ H_2O \rightarrow 5\ CO_2 + 5\ CH_4$

Glycerol (90 percent conversion):

$2\ C_3H_8O_3 + 2\ H_2O \rightarrow CO_2 + 5\ CH_4 + 3\ O_2$

Acetaldehyde (90 percent conversion):

$2\ C_2H_4O + 2\ H_2O \rightarrow CO_2 + 3\ CH_4 + O_2$

Fusel Oils (90 percent conversion):

$2\ C_5H_{12}O + 6\ H_2O \rightarrow CO_2 + 9\ H_2O + 3\ O_2$

Cellulase (90 percent conversion):

$4\ C_{100}H_{157}N_{29}O_{31} + 362\ H_2O \rightarrow 62\ CO_2 + 338\ CH_4 + 58\ N_2 + 181\ O_2$

Soluble Solids (90 percent conversion):

$2\ C_{100}H_{148}O_{19} + 214\ H_2O \rightarrow 19\ CO_2 + 181\ CH_4 + 107\ O_2$

The second reactor simulates cellmass growth, using the following reaction:

$383\ CO_2 + 417\ CH_4 + 184\ NH_3 \rightarrow 8\ C_{100}H_{164}N_{23}O_{39} + 454\ H_2O$

While not technically correct, the above cell growth reaction is used because using individual organic components for cellmass growth would result in oxygen balance problems, as well as many complicated formula. The above reaction does accurately

summarize the overall effect, since the organics must be broken down into digestible parts before the cell can use it as building block material. This also allows the organics in the first reactor to be converted at 90 percent independently of cellmass growth data.

Ammonia addition is controlled to yield a zero ammonia flowrate in the second reactor product stream (8107).

The material is then sent to a flash operation to simulate vent composition. The biogases are sent to incineration, while the liquids and entrained solids are sent for further processing.

(b) BESSF-820: Wastewater Treatment, Aerobic Biotreatment

Water from the anaerobic treater is sent to T-807, the aerobic biotreater. Oxygen from the PSA unit is sparged into the system via a sparger (GV-807). The remaining organics are aerobically treated at 100 percent conversion to CO_2 and H_2O, using the following reactions:

Cellulose, mannan, galactan:

$$C_6H_{10}O_5 + 6\ O_2 \rightarrow 6\ CO_2 + 5\ H_2O$$

Xylan, arabinan:

$$2\ C_5H_8O_4 + 5\ O_2 \rightarrow 5\ CO_2 + 4\ H_2O$$

C6 sugars:

$$C_6H_{12}O_6 + 6\ O_2 \rightarrow 6\ CO_2 + 6\ H_2O$$

C5 sugars:

$$2\ C_5H_{10}O_5 + 5\ O_2 \rightarrow 5\ CO_2 + 5\ H_2O$$

Ethanol:

$$C_2H_5OH + 4\ O_2 \rightarrow 2\ CO_2 + 3\ H_2O$$

HMF:

$$C_6H_6O_3 + 6\ O_2 \rightarrow 6\ CO_2 + 3\ H_2O$$

Furfural:

$$C_5H_4O_2 + 5\ O_2 \rightarrow 5\ CO_2 + 2\ H_2O$$

Glycerol:

$$2\ C_3H_8O_3 + 7\ O_2 \rightarrow 6\ CO_2 + 8\ H_2O$$

Acetaldehyde:

$$2\ C_2H_4O + 5\ O_2 \rightarrow 4\ CO_2 + 4\ H_2O$$

Fusel Oils:

$$2\ C_5H_{12}O + 15\ O_2 \rightarrow 10\ CO_2 + 12\ H_2O$$

Soluble Solids:

$$2\ C_{100}H_{148}O_{19} + 255\ O_2 \rightarrow 200\ CO_2 + 148\ H_2O$$

Cellulase:

$$C_{100}H_{157}N_{29}O_{31} + 102\ O_2 \rightarrow 100\ CO_2 + 35\ H_2O + 29\ NH_3$$

Cellmass does not get converted; it is taken out via clarifiers and thickeners as sludge.

Oxygen addition is controlled to supply 50 percent excess oxygen (Based on Theoretical Oxygen Demand) to the aerator.

The reactor products are sent to a flash to simulate vapors sent to atmosphere (the aerator is an open-top vessel). The liquids are clarified (GV-808) and thickened, with the sludge going to the boiler as fuel, and the clarified waters are sent to the process water tank for recycle to utility service.

(c) BESSF-821: Boiler Fuels

This flowsheet summarizes the boiler feedstreams from the process. Vents are combined and sent through a boiler feed blower (except for the scrubber vent, 6411, which has a dedicated blower). Liquids and slurries are combined separately from the gases, and are sent to the boiler as well.

9. Area 900: Steam Boiler/Turbogenerator

A steam balance flowsheet for the steam circuit is included based on the system used in the Radian report[16]. The turbogenerator uses 10,441 kpa (1,500 psig) steam at 510°C (950°F). Both medium pressure and low pressure steam are extracted to supply the process requirement. The remaining steam is sent to a condensing turbine to maximize the power generation. Efficiencies are assumed to range from 79 to almost 85 percent.

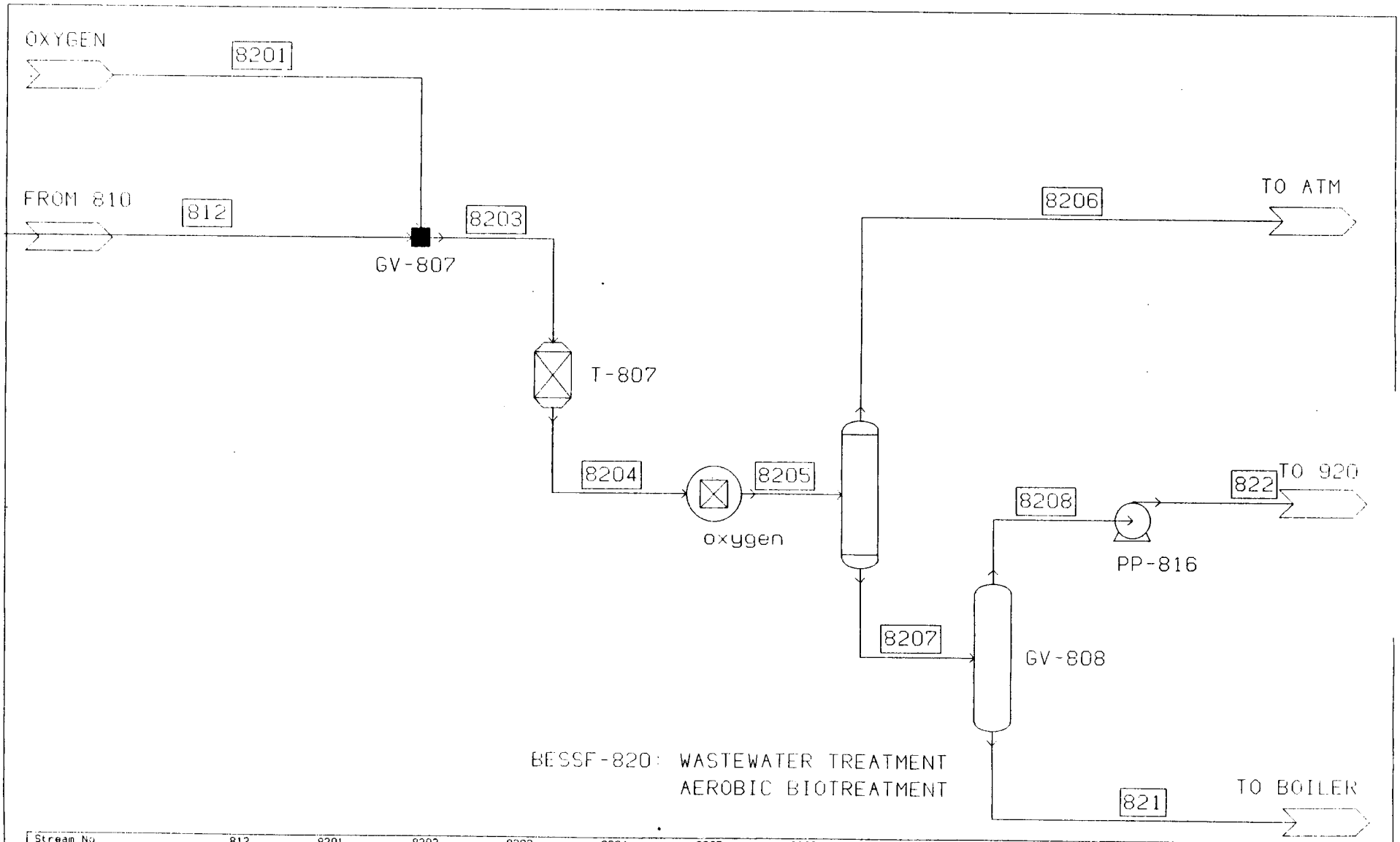

BESSF-820: WASTEWATER TREATMENT
AEROBIC BIOTREATMENT

Stream No	812	8201	8202	8203	8204	8205	8206	8207	8208	821	822
Name											
- - Overall - -											
Temp C	35.	20.	134.	35.	52.	52.	20.	20.	20.	20.	20.
Pres Pa	404000.	404000.	275000.	102000.	102000.	102000.	102000.	102000.	102000.	102000.	452000.

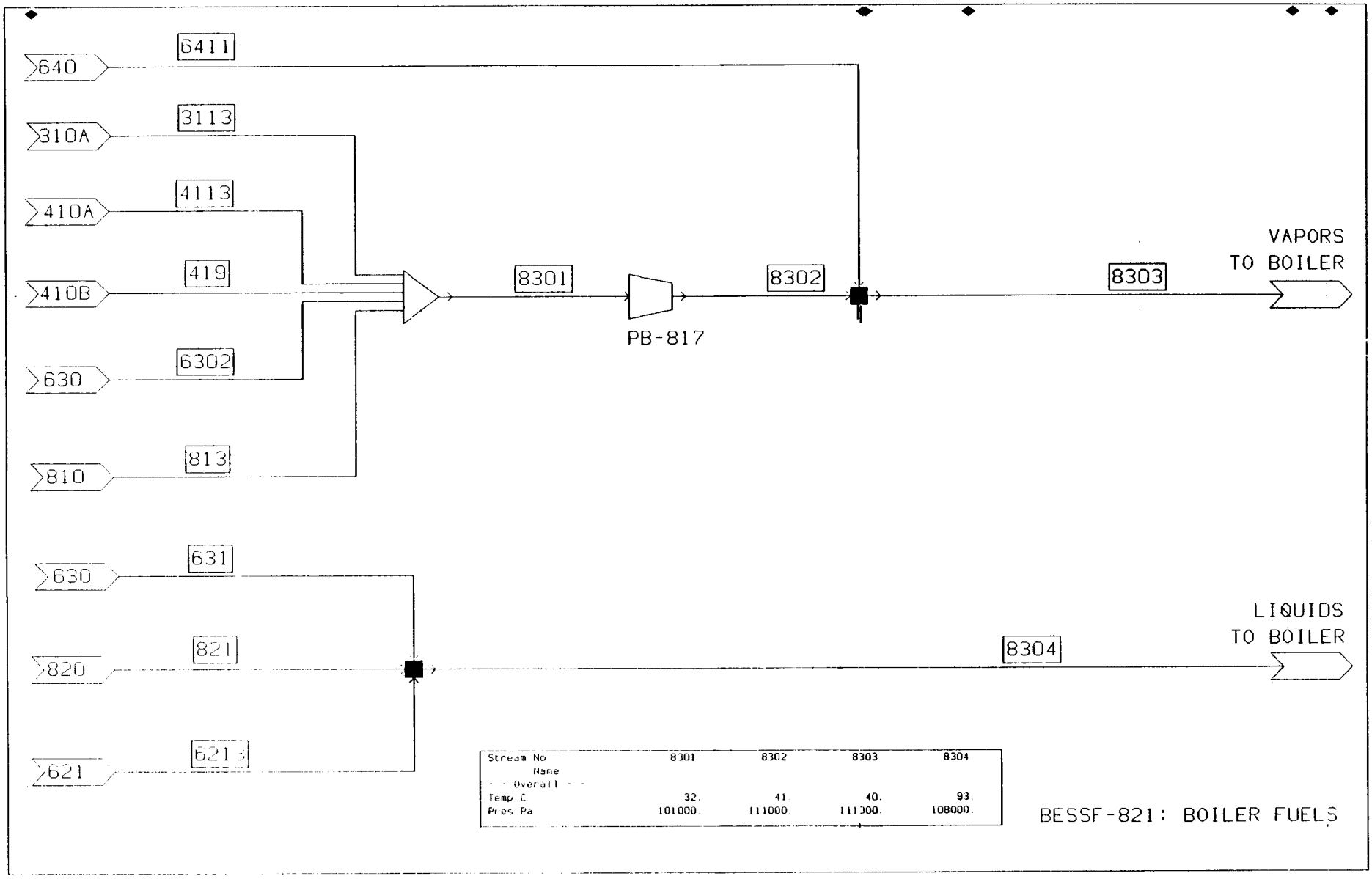
640
6411
310A
3113
410A
4113
410B
419
630
6302
810
813
8301
PB-817
8302
8303
VAPORS
TO BOILER
630
631
820
821
621
6213
8304
LIQUIDS
TO BOILER
Stream No 8301 8302 8303 8304
Name
- - Overall - -
Temp C 32. 41. 40. 93.
Pres Pa 101000. 111000. 111000. 108000.
BESSF-821: BOILER FUELS

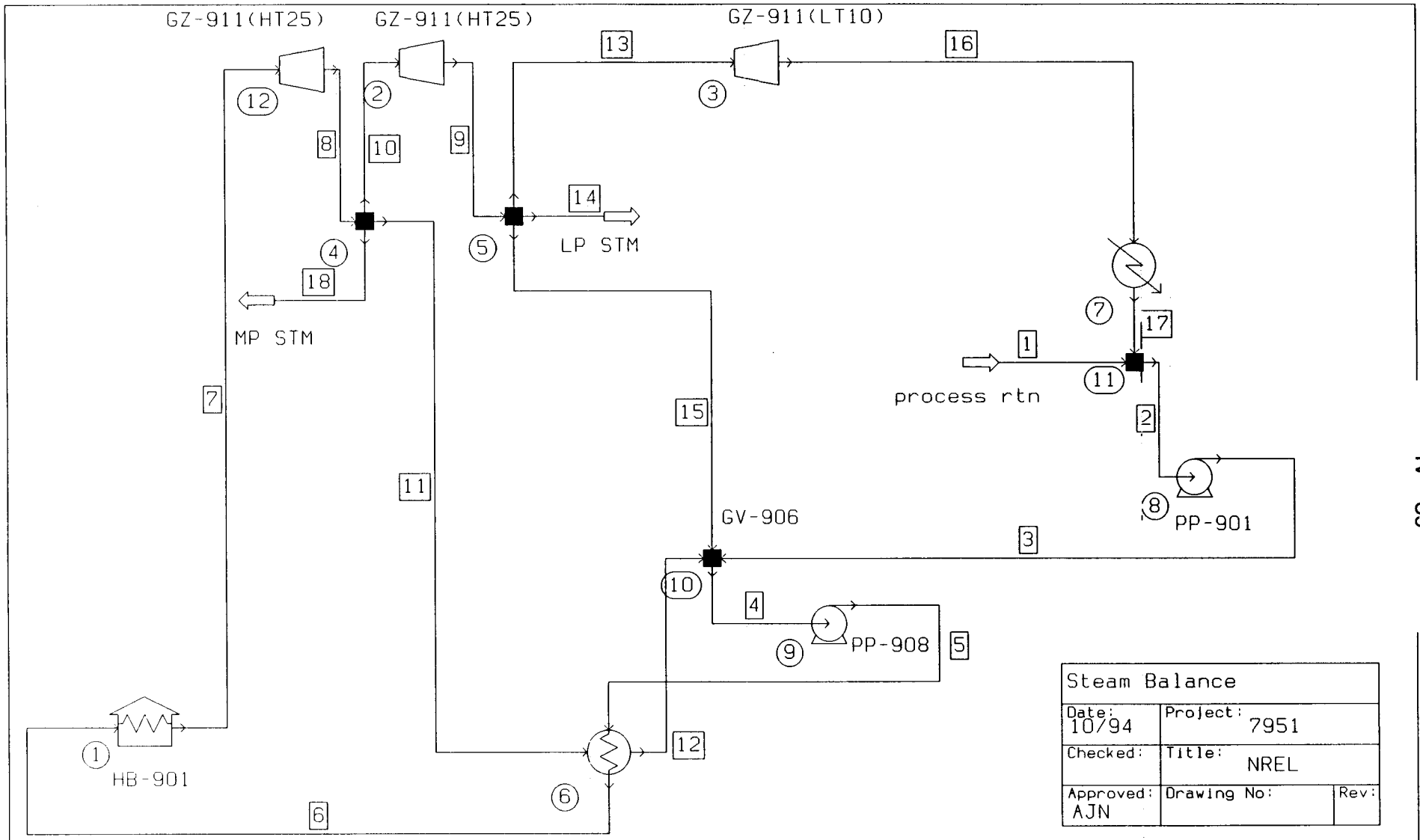

Stream No	1	2	3	4	5	6	7	18	11	14	15	16	12
Name	process rtn							MP STM		LP STM			
- - Overall - -													
Mass flow lb/h	343290.0000	414640.0312	414640.0312	497407.0000	497407.0000	497407.0000	497407.0000	256161.0000	44600.0000	87129.0000	38167.0000	71350.0234	44600.0000
Temp F	120.4368	120.4367	121.1817	222.3022	229.3380	314.1483	950.0001	460.1861	460.1861	318.6778	318.6778	120.4368	309.9000
Pres psia	1.7200	1.7200	145.0300	62.2300	1893.2000	1893.1990	1514.3989	171.3000	171.3000	66.9100	66.9100	1.7200	159.3300
Enth MMBtu/h	30.36	36.74	36.97	94.88	98.43	141.7	725.8	320.2	55.75	103.7	45.41	70.83	12.51

V EQUIPMENT SIZING

This section lists the design assumptions and bases used to specify equipment sizes.

- Tanks
- Agitators
- Pumps
- Heat exchangers
- Miscellaneous equipment
- Utilities

Equipment sizes can be found in Appendix V.

A. TANKS

Unless otherwise noted below, sizing criteria for tanks were the same used in the 1991 SERI report[5].

- T-201 Sulfuric Acid Storage Tank
  - Sized to hold 24 hours of sulfuric acid needed for normal operating conditions.

- T-203 Blowdown Tank
  - Sized for 5 minutes residence time.

- T-206 Neutralization Reaction Tank
  - Sized for 10 minutes residence time.

- T-220 Lime Slurry Tank
  - Sized for 24 hours hold of line slurry at normal operating conditions.

- T-321 Base Tank
  - Sized to hold 24 hours of liquid ammonia needed for normal operating conditions.

- T-601 Degasser Drum

- Sized for 5 minutes residence time.

- T-803 Equalization Tank
  - Sized for 24 hours hold.

- T-804 Anaerobic Reaction
  - Two tanks set at 425,000 gallons capacity.

- T-807 Biotreater
  - Four tanks set for total residence time of 3 days.

T-804

Stream 8106 in tr
in 126,321 kg/hr
= 278,538 lb/hr
= 33,398 gal/hr

Res Time = 900,000 gal / 33,398 gal/h
= 26.9 = 27 h

The SERI report[5] indicates that the pH in the fermentation vessels (xylose and SSF) can be as low as 3.5. It is known that acidic solutions are highly corrosive to carbon steel, and even more so if carbon dioxide is present. Experience in the corn-to-ethanol industry has been primarily with stainless steel fermentation vessels.[5] However, stainless steel could increase the overall investment by approximately 20 percent.

A report by United Engineering[17] indicates that a lined carbon steel vessel would be less expensive than stainless steel by about 45 percent (750,00 gallons), but more expensive than carbon steel by about 40 percent. However, this latter cost is subject to a broad range of quotes depending upon the type of lining, as well as other variables. There are a broad range of linings available and locating a suitable coating for the fermentation vessels should not be a problem. The investment costs were based on the United Engineering report[17] for a lined carbon steel tank.

B. COLUMNS

The columns were rigorously sized using CHEMCAD data modelled with the following parameters:

- AS-601 Beer Still
  - Trays were one pass sieve trays, 1.9 cm diameter holes, to minimize plugging from solids.
  - Column diameter was limited to 4.1 m internal diameter, based on transportation restrictions.

- AS-602 Rectification Still
  - Trays use one-pass valve trays.

- AS-604 Vent Scrubber
  - Packed column using 1" pall rings, random packing.

For more detailed results of column sizing, please refer to Appendix A.III.

C. HEAT EXCHANGERS

Heat exchangers were sized based on the required heat exchange duty, with area calculated from:

$$A = \frac{Q}{U\Delta T_{LM}}$$

where

A = area of exchanger surface, m^2
U = heat transfer coefficient, W/m^2K
Q = heat duty, W
ΔT_{LM} = log mean temperature difference, K

Exchangers with liquid/liquid flow were assumed to be counter current flow designs.

The following heat transfer coefficients were used for exchanger sizing[5]:

	W/m^2K
Condensing steam - liquid	3,976
Liquid - liquid	1,278
Condensing vapors - gas	568
Condensing vapors - liquid	2,272
Coils in agitated tank	568
Gas - liquid	341

D. PUMPS

Pumps were sized based on an estimated pressure drop expected by the fluid, due to a combination of static head and dynamic head. Dynamic head estimates included possible control values (set at a minimum 70 kPa or 25 percent of dynamic head loss, whichever greater), and heat exchangers (70 kPa drop for liquid flows).

Please refer to Appendix A.IV (Equipment List) for detailed estimates on differential pressure for each pump and horsepower requirements for drivers.

E. MISCELLANEOUS EQUIPMENT

- MR-201/202 Prehydrolysis Reactor
  - This equipment was sized using data supplied by the manufacturer of the pilot plant reactor equipment.

- PSA Unit
  - Sized for supplying 1.5 times the theoretical oxygen demand of the wastewater treatment aerobic reactors.

- Wastewater Treatment Equipment
  - Please refer to the CH2M/Hill report[4], used as a basis for sizing the equipment in area 800, except for the anaerobic reactor where the loading rate was doubled.

- All OSBL (Area 900) Equipment
  - Sizing based on plant utility requirements (see Section F below).

F. UTILITIES

Three significant changes are noticeable in the new base case when compared to the SERI report. The most noticeable change is that the steam use in Section 600 (ethanol recovery) has increased significantly and the steam pressure has been upgraded to 1,034 kPa (150 psig). The amount required has increased because the columns as designed in the SERI report appear to be inadequate to meet the present needs. Attempts to model the SERI designed Beer Still (16 actual trays operating at a pressure of 15 psig and a reflux ratio of 0.4) using CHEMCAD showed that the column was incapable of meeting the overheads specifications.

Chem Systems redesigned the distillation section as two highly heat integrated columns as described above. The result is somewhat more steam being consumed (95 versus 78 thousand kilograms per hour), but since the SERI design was inadequate a comparison here is irrelevant. The higher pressure required by the first column (in order to be able to reboil the second column with the overheads from the first column) results in the low pressure steam being too cold to reboil the first column. Thus, the higher pressure steam is required as the heat source. The payout for the change to a high pressure beer still is 1.5 years on an additional $3.1 million investment.

The amount of cooling water consumption has decreased because of additional heat integration and the increased use of chilled water (in order to cool the recycle water for the seed fermenters). The fermentation air requirement has been decreased because the new design requires only one SSF seed train.

The utilities are summarized and compared to the SERI design in the appendix.

VI COST MODEL

A. COST ESTIMATE

1. Basis

(a) Purchased Equipment Costs

The basis for most of the purchased equipment cost is "Price and Delivery Quoting Service for Process Equipment Costs", a commercially available computer software program. Pricing for certain equipment which was not covered by this software was usually obtained through vendor quotes(e.g. lobe pumps, disk refiner, pre-hydrolysis system, circulating fluidized-bed boiler). In general a reasonableness check was made on most equipment by comparing the costs with in-house data for order-of-magnitude accuracy. All pricing is for 1993.

The inside battery limits (ISBL) portion of the plant can be thought of as a boundary over which are imported raw materials, catalyst and chemicals, and utility supply streams. In a like manner, main products, by-products and spent utility return streams are exported over the boundary.

The battery limits investment includes the cost of the main processing blocks of the chemical plant necessary to manufacture products. It represents a plant ordered from a contractor and built on a prepared site with normal load-bearing and drainage characteristics in a developed part of the world (in this case, the southeast United States).

Battery limits investment includes the installed cost of the following items:

- Process equipment vessels and internals, heat exchanges, pumps and compressors, drivers, solids handling, etc.
- Major spare equipment/parts (e.g., spare rotor for turbine or compressor,etc.)
- Buildings housing process units

- Process and utility piping and supports within the major process areas
- Instrumentation, including computer control systems
- Electrical wiring and hardware
- Foundations and pads
- Structures and platforms
- Insulation
- Paint and corrosion protection
- Process sewers
- Fire water piping and monitors
- Utility stations

Offsites or OSBL include the plant investment items that are required in addition to the main process units within the battery limits. These auxiliary items are necessary to the functioning of the production unit, but perform in a supporting role rather than being directly involved in the production.

In estimating some of the offsite costs Chem Systems has used factors based on Chem Systems' previous experience with different projects over the past several years. These items are described in detail below along with the factor (as a percentage of ISBL) used to determine the cost.

- Buildings (4%) - This includes an office and administrative building, laboratory, change house and cafeteria, guard house, garage, maintenance shop and warehouse.
- Site development (9%) - Included in the site development costs are fencing, curbing, parking lot, roads, wells, drainage, rail system, soil borings and general

paving. The above factor allows for minimum site development assuming a clear site, no unusual problems such as right-of-ways, difficult land clearing or unusual environmental problems (these are covered under other projects below).

- Additional piping (4.5) - This includes piping required for a flare system, instrument and plant air, process water, fire water loop, inert gas, process area tie-ins and interconnecting piping within the storage area.

(b) Erection Costs

Multipliers have been developed whereby the installed cost of various kinds of equipment may be found.[15] Such multipliers range from 1.2 to 3.0 and have been applied to each individual piece of equipment in order to come up with the total erected cost (TEC). The appropriate multipliers are shown in Table VI.A.1.

TABLE VI.A.1
MULTIPLIERS FOR INSTALLATION COST OF PROCESS EQUIPMENT

Equipment		Multiplier[1]
Agitators	- carbon steel (cs)	1.3
	- stainless steel (ss)	1.2
Boilers		1.3
Compressors (motor driven)		1.3
Cooling towers		1.2
Distillation columns	- cs	3.0
	- ss	2.1
Filters		1.4
Heat exchangers (S&T)	- cs/ss	2.1
Pumps - lobe		1.4
- centrifugal,	- cs	2.8
- centrifugal,	- ss	2.0
Pressure vessels	- cs	2.8
	- ss	1.7
Tanks (field erected)	- cs	1.4
	- cs w/lining	1.6
	- ss	1.2
Solids handling equipment		1.2-1.4
Turbogenerator		1.5

[1] Installed cost = (purchase equipment cost) (multiplier)

(c) Indirect Costs

The indirect component of the plant construction costs is based on Chem Systems' experience. The components of the indirects are described below along with the factors (as a percentage of TEC) applied for this cost estimate.

- Prorateable costs (10%) - This includes fringe benefits, burdens and insurance of the construction contractor.

- Field expenses (10%) - This includes consumables, small tool equipment rental, field services, temporary construction facilities and field construction supervision.

- Home office construction and fee (25%) - This includes engineering plus incidentals, purchasing and construction.

- Project contingency (3%) - Because of the length of the equipment list, a small process contingency of 3 percent has been included.

(d) Other Project Costs

In addition to the equipment costs, erection costs and indirects there are other costs associated with any project that mst be paid by the owner. These costs are summarized below for a typical project and typically range from 10 to 30 percent of the total investment (ISBL + OSBL) costs. These costs are very site and project specific. For this project Chem Systems has utilized a relatively low value of 10 percent. Other project costs include items such as:

- Start-up and commissioning costs (extra operating manpower; owner's technical manpower; start-up services such as licensor representatives, contractor personnel and equipment supplier and other vendor representatives; operating manuals and training programs; modification and maintenance during start-up; and operating expenses to the extent that they do not result in salable product).

- Land, rights-of-way, permits, surveys, and fees

- Piling, soil compaction/dewatering, unusual foundation requirements

- Sales, use and other taxes
- Freight, insurance in transit and import duties on equipment, piping, steel, instrumentation, etc.
- Overtime pay during construction
- Field insurance
- Project team - including preliminary planning studies, HAZOP studies, environmental reviews, design, engineering, estimating, inspection, accounting, auditing, legal, construction management, travel and living
- Initial charges of raw materials, catalysts, chemicals, and packaging materials
- Initial stock of maintenance, laboratory, operating and office supplies
- Transportation equipment - including barges, railcars, tank trucks, bulk shipping containers, plant vehicles, etc.
- Provisions for temporary shutdown expenses
- Owner's scope contingency allowance (5 percent assumed)
- Escalation or inflation of costs over time
- Interest on construction loan
- 100 percent equity, no financing charges included

2. Results

The capital investment is provided in Appendix V and summarized in Table IV.A.2. At this level of detail the capital cost estimate is judged to have an accuracy of plus or minus 25 percent. The purchased equipment for the ISBL totals $25 MM and the corresponding installed cost is estimated to be $40 MM. The major investment in this area is the SSF

facilities having an installed cost of over $17 MM. In the off-site area the major investment item is the boiler package (boiler, BFW system and bag house) which is estimated to cost about $26.6 MM (installed). The total installed plant cost (both ISBL and OSBL) is estimated to be $101 MM. Adding in the indirects to this total gives a total capital investment of $150 MM. The total project investment including the owner's other project costs is estimated to be $165 MM

TABLE VI.A.2
INVESTMENT COST SUMMARY - BIOMASS TO ETHANOL PLANT
(millions dollars, 1993 basis)

Plant Area		Purchased Equipment	Installed Equipment	
ISBL				
100	Wood handling	2.48	3.20	1.18
200	Prehydrolysis	5.19	7.75	18.1
300	Xylose fermentation	2.28	3.19	
400	Cellulase production	1.20	1.74	10
500	SSF	11.37	17.68	14
600	Ethanol recovery	2.93	6.49	4.4
	Total	**25.43**	**40.05**	
OSBL				
700	Off-site tankage	1.39	2.12	2.7
800	Waste treatment	4.44	6.09	7.7
900	Utilities			
	Boiler package (including BFW system)	20.28	26.61	25.3
	Process water	0.21	0.45	
	Turbogenerator	6.12	9.19	1.1
	Cooling water package	2.56	3.08	13.8
	Chilled water package	1.02	1.23	
	Plant, instrument and fermentation air	4.38	5.33	
	CIP/CS	0.17	0.30	
	Buildings		1.60	
	Site development		3.60	
	Additional piping		1.80	
	Total	**40.58**	**61.38**	
Indirects				
Prorateable costs			10.14	
Field expenses			10.14	
Home office construction and fees			25.36	
Contingency			3.04	
Total capital investment			150.12	
Owner's costs			15.01	
Total project investment			**165.13**	

B. COST ALGORITHMS

As part of developing an integrated, flexible model for this project, Chem Systems has developed cost algorithms that generate equipment cost estimates as a function of material balance flows (e.g. vessel size and, thus, cost as a function of a stream volumetric flow). These were then used to estimate the total investment cost.

The algorithms take the form:

$$\log (F.O.B.) = a \log (X) + b$$

where X is the stream variable (e.g. SCFM for a compressor) or equipment variable (e.g. square feet for a heat exchanger). Thus, by linking the process simulator output to a spreadsheet containing the algorithms, changes and sensitivities can be run and a new cost estimate obtained relatively easily and quickly, with only a few manual inputs.

C. COST OF PRODUCTION

A detailed estimate of the production costs can be separated into two discrete categories:

- Variable costs - Raw material (wood) including catalyst and chemicals; by-products (solids for disposal); and utilities (purchased electricity and raw water).

- Fixed costs - Direct operating costs (labor, maintenance, and direct overheads) and allocated costs (general plant overheads, insurance and property taxes).

The following factors have been used to estimate the fixed costs and are based on Chem Systems' past experience:

- Direct overheads associated with the workforce are on average about 45 percent of direct labor costs in the United States.

- Maintenance costs are typically between 2 and 4 percent of investment (3 percent has been applied)

- General administration costs are generally 65 percent of labor and maintenance costs in the United States

- Taxes and insurance typically range from 0.5 to 1.5 percent of the investment (0.7 percent has been used).

The annual capital charges are 20 percent of the total investment. This charge is approximately equivalent to a 10 percent discounted cash flow rate of return with the following parameters:

Material pricing used in the cost of production estimate are shown in Table VI.C.1.

Utility consumption by area is given in Appendix IV and compared with the 1991 SERF values.

TABLE VI.C.1
PRICING BASIS
(dollars per metric ton, fourth quarter 1993)

Wood (dry)	46
Sulfuric acid	72
Lime	50
Ammonia	129
Corn steep liquor	243
Nutrients	273
Antifoam	573
Glucose	1,168
Gasoline	165
Diesel	156
Solids disposal	(20)
Catalyst and chemicals	6

The cost of production estimate is shown in Table VI.C.2. The net raw materials is estimated to be $208 per metric ton (62 cents per gallon). Utilities are estimated to provide a credit of about $33 per metric ton (10 cents per gallon). The total variable cost is $176 per metric ton (52 cents per gallon).

Adding in the direct fixed costs ($27 per metric ton) and allocated fixed costs ($21/per metric ton) gives a total cash cost of production of $222 per metric ton or 66 cents per gallon.

Adding in the annual capital charge (20 percent of total investment) almost doubles the production cost. The resulting cost of denatured ethanol is estimated to be $430 per metric ton or $1.27 per gallon.

TABLE VI.C.2
COST OF PRODUCTION ESTIMATE FOR:ETHANOL
PROCESS:BIOMASS PER CSI

			CAPITAL COST	MILLION U.S. $
Plant start-up	4Q93		ISBL	59.3
Analysis date	4Q93		OSBL	90.8
Location	SE US		Total Plant Capital	150.1
Capacity	159.3	Thousand MT/yr	Other Project Costs	15.0
	54.0	Millions gallons per year	Total Capital Investment	165.1
Operating rate	100	percent	Working capital	11.4
Throughput	159.3	Thousand MT/yr		

PRODUCTION COST SUMMARY		UNITS Per MT Product	PRICE U.S. $ /Unit	U.S. $ Per MT	ANNUAL COST MM U.S. $	U.S. $ Per Gal
RAW MATERIALS	Wood (dry), MT	3.4613	46	160.244	25.53	
	Sulfuric Acid, MT	0.0551	72	3.947	0.63	
	Lime, MT	0.0416	50	2.063	0.33	
	Ammonia, MT	0.0374	129	4.829	0.77	
	Corn steep liquor, MT	0.0095	243	2.304	0.37	
	Nutrients, MT	0.0215	273	5.868	0.93	
	Antifoam, MT	0.0006	573	0.344	0.05	
	Glucose, MT	0.0083	1,168	9.698	1.55	
	Gasoline, MT	0.0500	165	8.245	1.31	
	Diesel, MT	0.0135	156	2.108	0.34	
	Catalyst & Chemicals		6	5.512	0.88	
	TOTAL RAW MATERIALS			205.163	32.69	0.61
BY-PRODUCT CREDITS	Solids Disposal, MT	0.15635	(20)	3.127	0.50	
	TOTAL BY-PRODUCT CREDITS			3.127	0.50	0.01
NET RAW MATERIALS				208.290	33.19	0.62
UTILITIES	Purchased Power, MWH	-0.81992	42	(34.437)	(5.49)	
	Raw water, MT	30.99803	0	0.819	0.13	
	TOTAL UTILITIES			(33.617)	(5.36)	(0.10)
VARIABLE COST				174.672	27.83	0.52
DIRECT FIXED COSTS	Labor, 41 Men	32.70 Thousand U.S. $		8.415	1.34	
	Foremen, 9 Men	37.10 Thousand U.S. $		2.096	0.33	
	Super., 1 Men	44.80 Thousand U.S. $		0.281	0.04	
	Maint., Material & Labor	3.00 % of ISBL		11.161	1.78	
	Direct Overhead	45 % Labor & Supervision		4.856	0.77	
	TOTAL DIRECT FIXED COSTS			26.809	4.27	0.08
ALLOCATED FIXED COSTS	General Plant Overhead	65 % Labor & Maintenance		14.269	2.27	
	Insurance, Property Tax	0.7 % Total Plant Capital		6.595	1.05	
	TOTAL ALLOCATED FIXED COSTS			20.864	3.32	0.06
TOTAL CASH COST				222.345	35.43	0.66
Annual Capital Charge		20 % total capital investment		207.281	33.03	
Cost of denatured ethanol				429.626	68.45	1.27

VII SENSITIVITY ANALYSIS

A. BASIS

The report prepared in 1991 by SERI[5] examined numerous parameters and their influence on the biomass process. In order to approach the target of 67 cents per gallon, several improvements were combined within one sensitivity. The basis for this sensitivity analysis is shown in Table VII.A.1 with the corresponding base case parameter.

TABLE VII.A.1
PROCESS PARAMETERS AND ASSUMPTIONS

	Base Case	Sensitivity (goal)
Cellulose to ethanol yield, %	75.7	90
Xylose to ethanol yield, %	85.5	95
Xylan to xylose yield, %	80.0	90
SSF fermentation time, days	7	3
Xylose fermentation time, days	2	1
Ethanol concentration in SSF, %	4.17	6
Cellulase loading, IU/g	7	3
SSF and xylose seed fermentations	yes	eliminated
Feedstock cost, $/dry ton (short)	42	34
Feedstock carbohydrate content, %	70.2	77.2
On-stream time, %	91.3	98
Electricity selling price, cents/KWH	4.2	6
Ethanol purification	distillation	mole seive

The changes to the base case can be grouped into three categories: technology improvements (yields, fermentation times, equipment, concentrations, loading, etc.); feedstock production improvements (cost and content); and more optimistic cost of production factors (electricity selling price and onstream time).

B. FLOW SCHEME

The flow scheme remains essentially unchanged except for the elimination of the SSF and xylose seed fermentation and the changes to the distillation section.

The distillation section has been simplified by the addition of a mole seive unit (replaces the rectification column). The objective is to reduce the investment costs, as well as the operating cost of the distillation columns. Although several mole seive units are currently being developed for this application including concentration and temperature swing operation, the pressure swing adsorption (PSA) operation designed by Delta T Corp. (Williamsburg, Virginia) is already commercial (model TSX-44) and claims to meet both requirements of lower investment and operating costs. (In reality the difference in investment is negligible).

The design operates in the vapor phase which requires that the ethanol be vaporized and condensed afterwards, but heat integration between the feed and effluent will minimize the need for external energy sources. At a minimum, two mole sieve vessels are required: one in normal service and one being regenerated.

Currently the largest commercial unit is about half the capacity of the unit required by the NREL plant. However, this does not appear to be a limitation with the Delta-T proprietary fluiddynamic technique for guaranteeing uniform flow through the beds.

Chem Systems has assumed that the simplier distillation system (one column plus PSA units) will require one less operator per shift.

C. RESULTS OF SENSITIVITY ANALYSIS

The sensitivity analysis results can be found in Appendix VIII and are discussed below.

1. Investment

The investment has been reduced significantly for the sensitivity case. The ISBL investment has been reduced by 30 percent. The major contributor to this savings is the reduction in the number of SSF and xylose fermentation tanks, as well as the elimination of the SSF and xylose seed fermentation tanks.

The OSBL investment is lower than the base case by about 5 percent. The larger turbogenerator is the result of a lower process steam requirement with the use of the PSA system for ethanol recovery and, thus, more power generation. This somewhat offsets the savings in the cooling water and fermentation air sections.

The overall investment results is a savings of $25 million in the total capital investment or about 15 percent less than the base case.

2. Operating Costs

The production of ethanol has increased by 30 percent over the base case to 71 million gallons per year, a portion of which is due to more onstream time and the rest due to better yields. The utilities have decreased by as much as 46 percent (fermentation air) from the base case. On a unit consumption per kilogram of ethanol basis, the improvement in utility consumption ranges from 23 to 59 percent.

An estimate of the cost of production (see Table VII.C.1) shows that the cost has been lowered from $430 per metric ton ($1.27 per gallon) to $251 per metric ton (74 cents per gallon). (Note that the COP spreadsheet is based on 8,000 hours per year. Thus, to achieve an operating rate of 98 percent (8.585 hours), the COP shows an operating rate of 107 percent). The savings from the base case are in four areas. Raw materials show a lower cost of $68.5 per metric ton (20 cents per gallon) mostly due to the lower cost assumed for the wood feedstock. The higher electrical production makes up most of the additional utility saving of $15.5 per metric ton (5 cents per gallon). The fixed costs show a reduction of $20.5 per metric ton (6 cents per gallon) due mostly to the higher production rate. However, the largest savings ($73.5 per metric ton or 22 cents per

TABLE VII.C.1
COST OF PRODUCTION ESTIMATE FOR:ETHANOL
PROCESS:BIOMASS PER CSI – SENSITIVITY CASE

		CAPITAL COST	MILLION U.S. $
Plant start–up	4Q93	ISBL	41.2
Analysis date	4Q93	OSBL	86.6
Location	SE US	Total Plant Capital	127.8
Capacity	210.5 Thousand MT/yr	Other Project Costs	12.8
	71.3 Millions gallons per year	Total Capital Investment	140.5
Operating rate	107 percent	Working capital	8.5
Throughput	225.9 Thousand MT/yr		

PRODUCTION COST SUMMARY		UNITS Per MT Product	PRICE U.S. $ /Unit	U.S. $ Per MT	ANNUAL COST MM U.S. $	U.S. $ Per Gal
RAW MATERIALS	Wood (dry), MT	2.6201	37	98.196	22.18	
	Sulfuric Acid, MT	0.0417	72	2.988	0.67	
	Lime, MT	0.0315	50	1.562	0.35	
	Ammonia, MT	0.0283	129	3.656	0.83	
	Corn steep liquor, MT	0.0095	243	2.304	0.52	
	Nutrients, MT	0.0162	273	4.442	1.00	
	Antifoam, MT	0.0006	573	0.344	0.08	
	Glucose, MT	0.0083	1,168	9.698	2.19	
	Gasoline, MT	0.0500	165	8.245	1.86	
	Diesel, MT	0.0102	156	1.596	0.36	
	Catalyst & Chemicals		6	5.512	1.24	
	TOTAL RAW MATERIALS			138.541	31.29	0.41
BY–PRODUCT CREDITS	Solids Disposal, MT	0.06254	(20)	1.251	0.28	
	TOTAL BY–PRODUCT CREDITS			1.251	0.28	0.00
NET RAW MATERIALS				139.792	31.57	0.41
UTILITIES	Purchased Power, MWH	–0.83059	60	(49.835)	(11.26)	
	Raw water, MT	25.47079	0	0.673	0.15	
	TOTAL UTILITIES			(49.162)	(11.10)	(0.15)
VARIABLE COST				90.630	20.47	0.27
DIRECT FIXED COSTS	Labor, 36 Men	32.70 Thousand U.S. $		5.212	1.18	
	Foremen, 8 Men	37.10 Thousand U.S. $		1.314	0.30	
	Super., 1 Men	44.80 Thousand U.S. $		0.198	0.04	
	Maint., Material & Labor	3.00 % of ISBL		5.467	1.23	
	Direct Overhead	45 % Labor & Supervision		3.026	0.68	
	TOTAL DIRECT FIXED COSTS			15.217	3.44	0.04
ALLOCATED FIXED COSTS	General Plant Overhead	65 % Labor & Maintenance		7.924	1.79	
	Insurance, Property Tax	0.7 % Total Plant Capital		3.959	0.89	
	TOTAL ALLOCATED FIXED COSTS			11.884	2.68	0.04
TOTAL CASH COST				117.731	26.59	0.35
	Annual Capital Charge	20 % total capital investment		133.532	28.11	
	Cost of denatured ethanol			251.263	54.70	0.74

gallon) is in the lower annual capital charge which is a direct result of the lower investment.

Included in the appendix are a comparison of the utilities from the base case and the sensitivity case, as well as the investment summary for the sensitivity case.

REFERENCES/BIBLIOGRAPHY

1. Perry, R.M. and Chilton, C.H., *Chemical Engineers Handbook*, Fifth Edition, McGraw Hill, 1973, Table 3-202.

2. Ibid, Table 3-2

3. Ibid, Table 1-7

4. *Full Fuel Cycle Analysis of Biomass to Ethanol: Wastewater Treatment System Performance*, CH2M/Hill, Dec. 1991.

5. Schell, D. et. al.: *Technical and Economic Analysis of an Enzymatic Hydrolysis Based Ethanol Plant*, Solar Energy Research Institute, June 1991.

6. Ramalho, R.S., *Introduction to Wastewater Treatment Processes*, Second Edition, Academic Press, 1983, Chapter 5.

7. Solomans, T.W.G., *Organic Chemistry*, Third Edition, John Weley and Sons, 1983.

8. Ullmann, F., *Encyclopedia of Industrial Chemistry*, Vol A9, VCH, 1987.

9. McKetta, J.J., *Encyclopedia of Chemical Processing and Design*, Vol. 19, Marcel Dekker, 1983.

10. *Economic Feasibility Study of an Enzymatic Hydrolysis Based Ethanol Plant with Prehydrolysis Treatment*, Chem Systems, 1984.

11. Correspondence from V. Putsche, NREL, 12/7/93.

12. Lide, D.R., *Handbook of Chemistry and Physics*, 73rd Edition, CRC 1992, Table 4.1.

13. ChemCAD 3.30, Physical Property Library, Chemstations, Inc., 1994.

14. Correspondence from V. Putsche, NREL, 12/27/93.

15. Walas, S.M., Chemical Process Equipment - Selection and Design, Butterworth Publishers, 1988.

16. Biomass-to-Ethanol-Total Energy Analysis Cycle, Radian Corp., 22 November 1991.

17. Production of Ethanol from Biomass Materials of Construction Options for Large Fermentation Vessels, United Engineers and Constructors, Inc., May, 1992.