RADIAN CORPORATION

RCN 213-185-01-00

8501 Mo-Pac Blvd.
P.O. Box 201088
Austin, TX 78720-1088
(512)454-4797

BIOMASS-TO-ETHANOL
TOTAL ENERGY CYCLE ANALYSIS

Prepared for:

National Renewable Energy Laboratory
1617 Cole Boulevard
Golden, CO 80401-3392

Prepared by:

Radian Corporation
8501 Mo-Pac Blvd.
P. O. Box 201088
Austin, Texas 78720-1088

22 November 1991

TABLE OF CONTENTS

Page

Executive Summary v

1.0 INTRODUCTION 1

2.0 BACKGROUND 2

3.0 PROCESS DESCRIPTION 3

3.1 Dryer 5
3.2 Fluidized Bed Boiler 5
3.3 Steam Turbine Generator 7
3.4 Condenser/Makeup Water Heater 8
3.5 Deaerator 8
3.6 Boiler Feed Pump 8
3.7 Water Treatment 8

4.0 SYSTEM PERFORMANCE SUMMARY 8

4.1 Boiler/Dryer Subsystem 9
4.2 Turbogenerator/Condenser Subsystem 10
4.3 Boiler Feed Water Preparation Subsystem 11
4.4 Emissions Summary 11

5.0 COST SUMMARY 12

5.1 Equipment Costs 12
5.2 Installed Costs 13
5.3 Annual Operating Costs 13

6.0 DISCUSSION 14

6.1 Fluidized Bed Boiler 14
6.2 Fluidized Bed Dryer 15
6.3 Turbogenerator/Condenser 16
6.4 Boiler Chemical Treatment 17
6.5 Boiler Feed Water Preparation 17
6.6 Estimated Emissions 17

APPENDIX A

Fluidized Bed Boiler Performance Summary

1. DESIGN CONDITIONS

1.1 Site Data

Plant Elevation, Ft.	560.
Ambient Air Pressure, Psia	14.4
Ambient Air Temperature, F.	80.
Relative Humidity, %	60.
Moisture, Lb/Lb of Dry Air	0.013

1.2 Steam Conditions

Load Condition	100.0%
Flow, Lb/Hr	395000.
Pressure, Psig	1500.
Temperature, F.	950.
Feedwater Temp., F.	335.

1.3 Fuel Analysis

WET BASIS	Biomass
Carbon	39.97
Hydrogen	5.85
Sulfur	0.02
Nitrogen	0.70
Oxygen	10.84
Ash	7.77
Moisture	34.85
HHV, Btu/Lb	6000.

DRY BASIS	Biomass
Carbon	61.35
Hydrogen	8.98
Sulfur	0.03
Nitrogen	1.07
Oxygen	16.64
Ash	11.93
HHV, Btu/Lb	9210.

1.4 Limestone Analysis

	WT. PERCENT
CaCO3	90.00
MgCO3	4.50
Inert	4.50
Water	1.00

1.5 Ash Analysis

(Wt. Percent)	100.0%
Calcium Oxide	0.00
Magnesium Oxide	0.00
Calcium Sulfate	0.00
Magnesium Sulfate	0.00
Limestone Inert	0.00
Fuel Ash	94.94
Unburned Fuel	5.06

2. PERFORMANCE DATA

2.1 Performance Data

1) Load Condition	100.0%
2) Type of Fuel (By Weight)	
Biomass %	100.
3) Main Steam, KLb/Hr	395.
4) Excess Air, %	20.
5) Calcium to Sulfur Ratio	0.0:1
6) Fuel Heat Input, MMBtu/Hr	607.
7) Bottom Ash/Fly Ash Split	50./50.
8) Quantity, Lb/Hr	
1. Fuel	101225.
2. Limestone	0.
3. Air (x1000)	749.
4. Gas (x1000)	842.
5. Ash (Total)	8284.
9) Pressure, Psig	
1. Ecomomizer Inlet	1700.
2. Drum	1640.
3. Superheater Outlet	1500.
10) Steam/Water Temperatures, F.	
1. Entering Economizer	335.
2. Drum	609.
3. Superheater Outlet	950.
11) Air Temperatures, F.	
1. Entering Fans	80.
2. Leaving Fans (Avg.)	100.
12) Exit Gas Temp., F.	300.
13) Efficiency Losses, %	
1. Dry Flue Gas	5.88
2. Moisture in Fuel	6.53
3. Moisture from Hydrogen	9.80
4. Unburned Carbon	1.00
5. Radiation	0.30
6. Unmeasured Losses	1.43
SUM OF LOSSES	24.95
BOILER EFFICIENCY	75.05
14) Fan Operating Horsepower	
1. Primary Air Fan	1414.
2. Secondary Air Fan	423.
3. High Pres. Blower	223.
4. Induced Draft Fan	1343.

3. EMISSIONS

3.1 Emissions

1) SO2	
Lb/Hr	40.45
Ppm d.v.	26.
Lb/MMBtu	0.067
Percent Retention	0.0
2) NOx	
Lb/Hr	242.94
Ppm d.v.	215.
Lb/MMBtu	0.400
3) CO	
Lb/Hr	91.10
Ppm d.v.	133.
Lb/MMBtu	0.150
4) VOC	
Lb/Hr	15.18
Ppm d.v.	39.
Lb/MMBtu	0.025
5) Particulate Matter	
Lb/Hr	18.22
Lb/MMBtu	0.030
*Gr/Acf	0.008

* Pressure = 14.4 Psia & 300. F.

AHLSTROM PYROPOWER	TITLE RADIAN CORP./NREL/PACIFIC NORTHWEST			PROPOSAL NO. B91-95
	395,000 LB/HR -1500 PSIG -950° F			DRAWING NO. B9195-A01
	DRAWN by: RB	APPROVED by: RB	DATE 11/05/91	PAGE 1 of 2

L = 98 ft

W = 58 ft

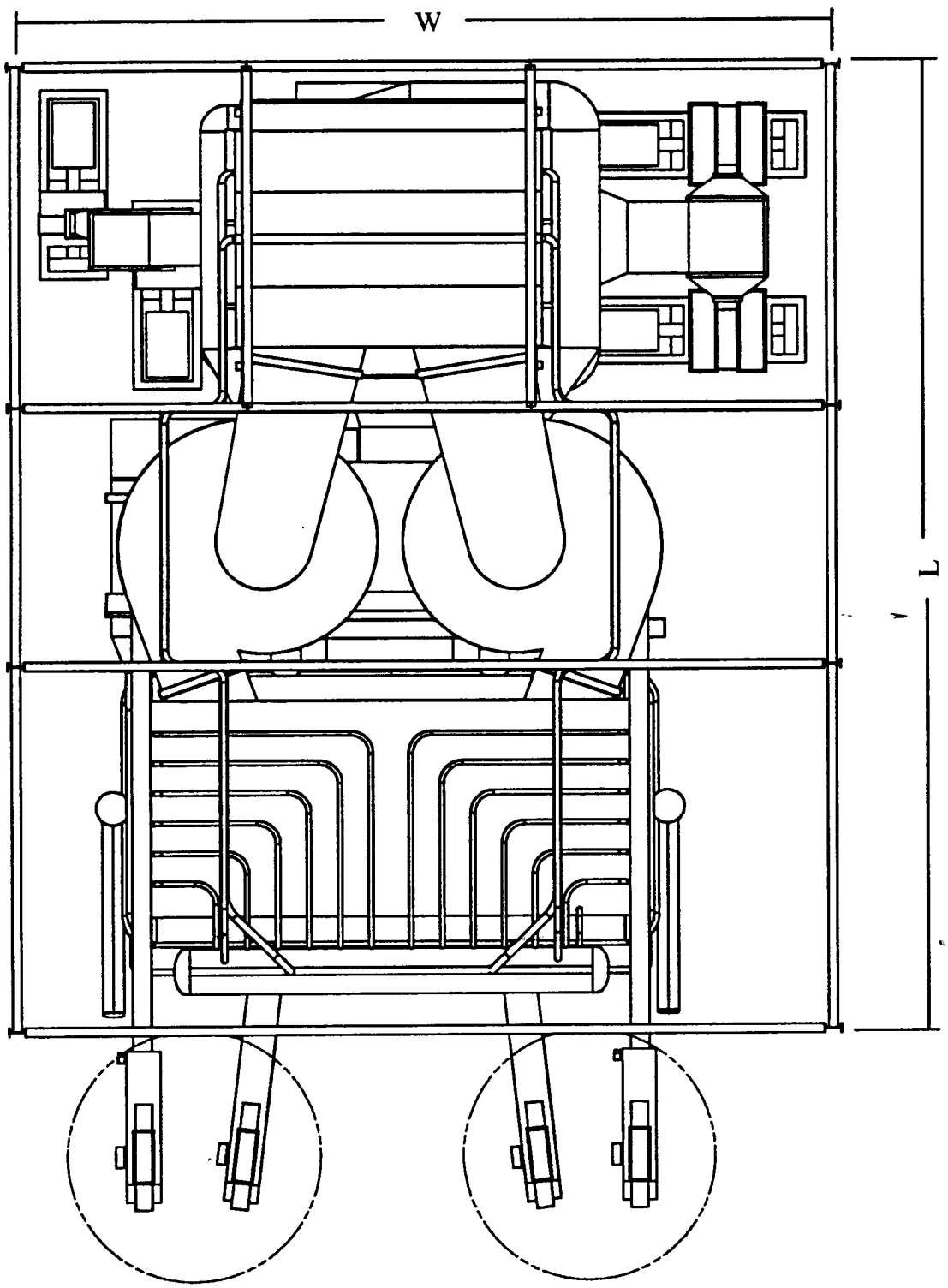

PLAN VIEW

AHLSTROM PYROPOWER	TITLE RADIAN CORP./NREL/PACIFIC NORTHWEST			PROPOSAL NO. B91-95
	395,000 LB/HR -1500 PSIG -950° F			DRAWING NO. B9195-A02
	DRAWN by: SJC	APPROVED by: RB	DATE 11/05/91	PAGE 2 of 2

H = 130 ft

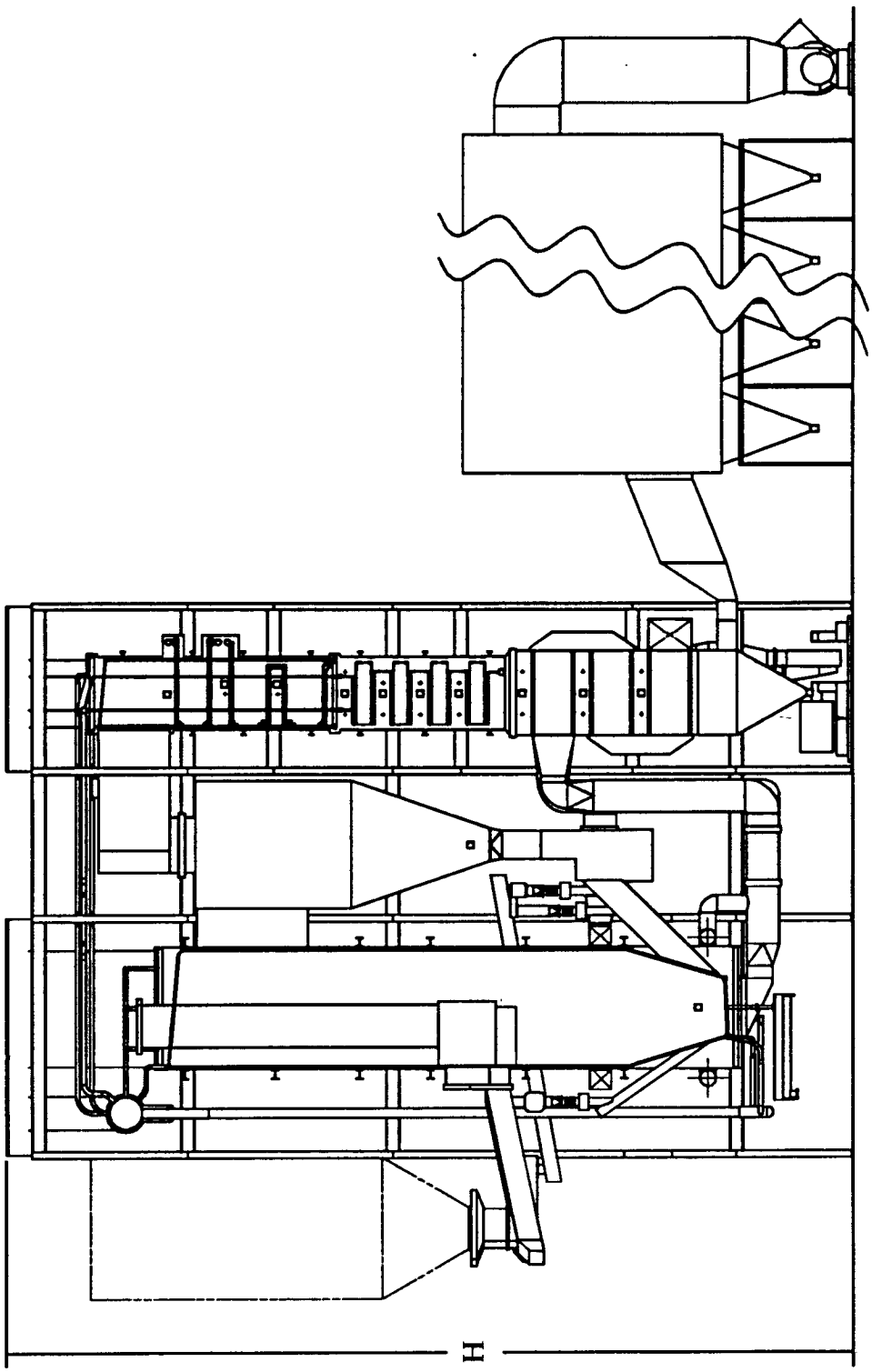

ELEVATION VIEW

1. DESIGN CONDITIONS

1.1 Site Data

Plant Elevation, Ft.	378.
Ambient Air Pressure, Psia	14.5
Ambient Air Temperature, F.	80.
Relative Humidity, %	60.
Moisture, Lb/Lb of Dry Air	0.013

1.2 Steam Conditions

Load Condition	100.0%
Flow, Lb/Hr	285000.
Pressure, Psig	1500.
Temperature, F.	950.
Feedwater Temp., F.	335.

1.3 Fuel Analysis

WET BASIS	Biomass
Carbon	38.19
Hydrogen	4.72
Sulfur	0.05
Nitrogen	1.42
Oxygen	10.36
Ash	10.90
Moisture	34.36
HHV, Btu/Lb	5106.

DRY BASIS	Biomass
Carbon	58.18
Hydrogen	7.19
Sulfur	0.08
Nitrogen	2.16
Oxygen	15.78
Ash	16.61
HHV, Btu/Lb	7779.

1.4 Limestone Analysis

	WT. PERCENT
CaCO3	90.00
MgCO3	4.50
Inert	4.50
Water	1.00

1.5 Ash Analysis

(Wt. Percent)	100.0%
Calcium Oxide	0.00
Magnesium Oxide	0.00
Calcium Sulfate	0.00
Magnesium Sulfate	0.00
Limestone Inert	0.00
Fuel Ash	96.87
Unburned Fuel	3.13

2. PERFORMANCE DATA

2.1 Performance Data

1) Load Condition	100.0%
2) Type of Fuel (By Weight)	
Biomass %	100.
3) Main Steam, KLb/Hr	285.
4) Excess Air, %	20.
5) Calcium to Sulfur Ratio	0.0:1
6) Fuel Heat Input, MMBtu/Hr	446.
7) Bottom Ash/Fly Ash Split	50./50.
8) Quantity, Lb/Hr	
1. Fuel	87257.
2. Limestone	0.
3. Air (x1000)	586.
4. Gas (x1000)	664.
5. Ash (Total)	9818.
9) Pressure, Psig	
1. Ecomomizer Inlet	1700.
2. Drum	1640.
3. Superheater Outlet	1500.
10) Steam/Water Temperatures, F.	
1. Entering Economizer	335.
2. Drum	609.
3. Superheater Outlet	950.
11) Air Temperatures, F.	
1. Entering Fans	80.
2. Leaving Fans (Avg.)	100.
12) Exit Gas Temp., F.	300.
13) Efficiency Losses, %	
1. Dry Flue Gas	6.35
2. Moisture in Fuel	7.57
3. Moisture from Hydrogen	9.29
4. Unburned Carbon	1.00
5. Radiation	0.35
6. Unmeasured Losses	1.62
SUM OF LOSSES	26.18
BOILER EFFICIENCY	73.82
14) Fan Operating Horsepower	
1. Primary Air Fan	1099.
2. Secondary Air Fan	336.
3. High Pres. Blower	174.
4. Induced Draft Fan	1046.

3. EMISSIONS

3.1 Emissions

1) SO2	
Lb/Hr	87.16
Ppm d.v.	70.
Lb/MMBtu	0.196
Percent Retention	0.0
2) NOx	
Lb/Hr	178.21
Ppm d.v.	200.
Lb/MMBtu	0.400
3) CO	
Lb/Hr	66.83
Ppm d.v.	123.
Lb/MMBtu	0.150
4) VOC	
Lb/Hr	11.14
Ppm d.v.	36.
Lb/MMBtu	0.025
5) Particulate Matter	
Lb/Hr	13.37
Lb/MMBtu	0.030
*Gr/Acf	0.007

* Pressure = 14.5 Psia & 300. F.

AHLSTROM PYROPOWER	TITLE RADIAN CORP./NREL/SOUTHEAST	PROPOSAL NO. B91-95
	285,000 LB/HR -1500 PSIG -950° F	DRAWING NO. B9195-A01
	DRAWN by: RB / APPROVED by: RB / DATE 11/05/91	PAGE 1 of 2

L = 92 ft

W = 52 ft

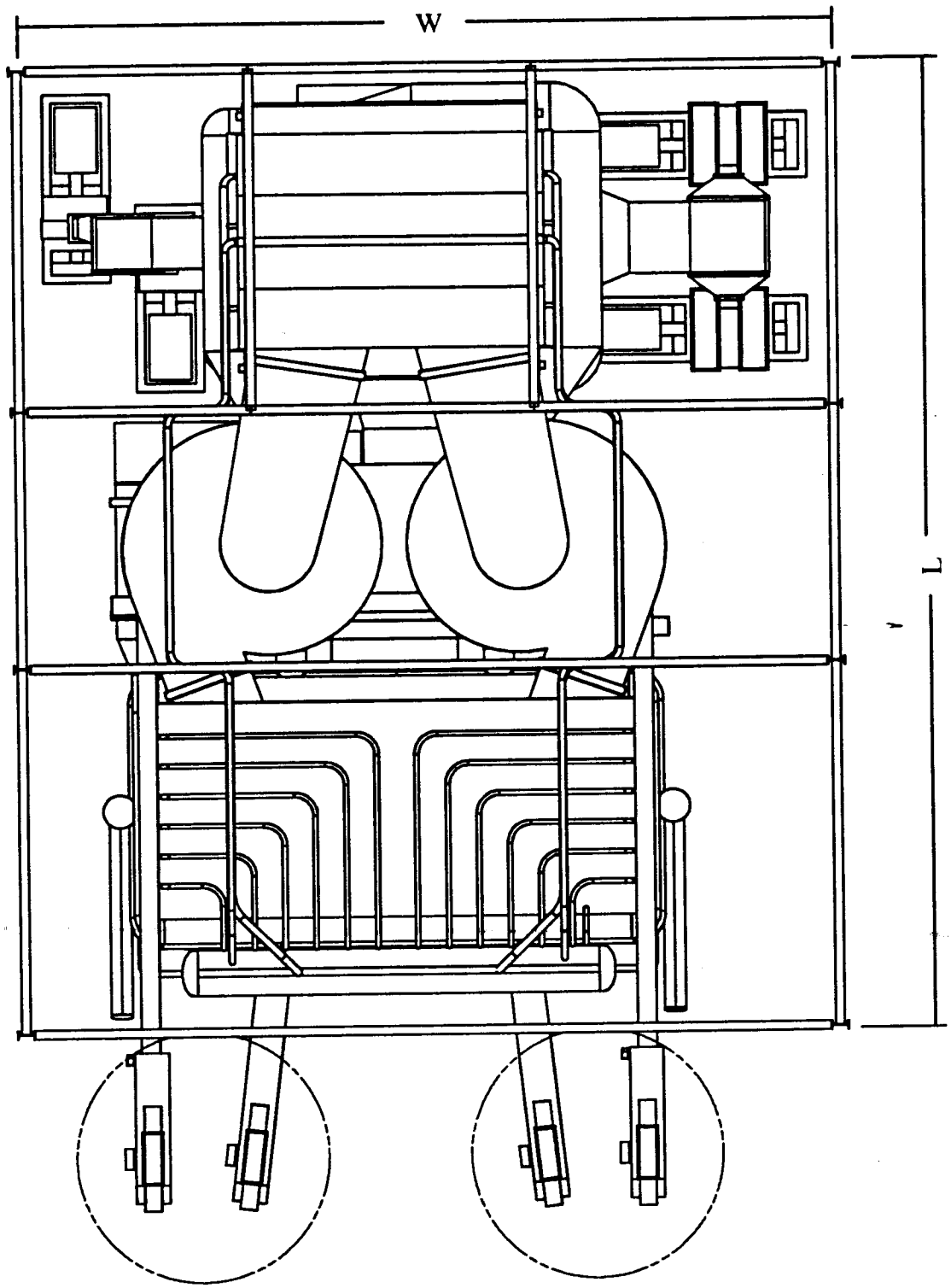

AHLSTROM PYROPOWER	TITLE RADIAN CORP./NREL/SOUTHEAST			PROPOSAL NO. B91-95
	285,000 LB/HR –1500 PSIG –950° F			DRAWING NO. B9195-A02
	DRAWN by: SJC	APPROVED by: RB	DATE 11/05/91	PAGE 2 of 2

H = 125 ft

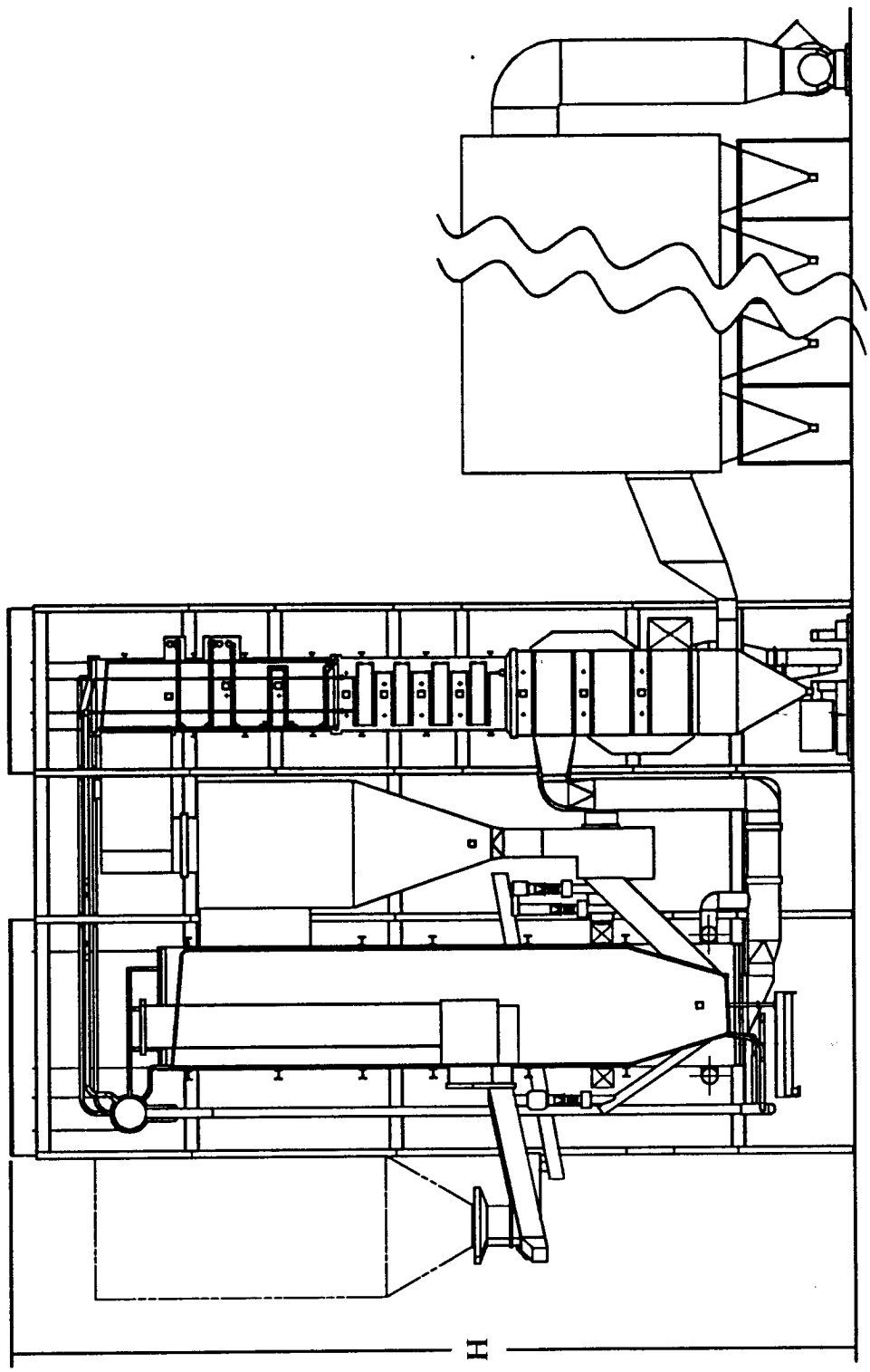

ELEVATION VIEW

1. DESIGN CONDITIONS

1.1 Site Data

Plant Elevation, Ft.	508.
Ambient Air Pressure, Psia	14.4
Ambient Air Temperature, F.	80.
Relative Humidity, %	60.
Moisture, Lb/Lb of Dry Air	0.013

1.2 Steam Conditions

Load Condition	100.0%
Flow, Lb/Hr	279000.
Pressure, Psig	1500.
Temperature, F.	950.
Feedwater Temp., F.	335.

1.3 Fuel Analysis

WET BASIS	Biomass
Carbon	37.93
Hydrogen	4.27
Sulfur	0.08
Nitrogen	1.81
Oxygen	10.35
Ash	11.10
Moisture	34.46
HHV, Btu/Lb	4744.

DRY BASIS	Biomass
Carbon	57.87
Hydrogen	6.52
Sulfur	0.12
Nitrogen	2.76
Oxygen	15.79
Ash	16.94
HHV, Btu/Lb	7238.

1.4 Limestone Analysis

	WT. PERCENT
CaCO3	90.00
MgCO3	4.50
Inert	4.50
Water	1.00

1.5 Ash Analysis

(Wt. Percent)	100.0%
Calcium Oxide	0.00
Magnesium Oxide	0.00
Calcium Sulfate	0.00
Magnesium Sulfate	0.00
Limestone Inert	0.00
Fuel Ash	97.14
Unburned Fuel	2.86

2. PERFORMANCE DATA

2.1 Performance Data

1)	Load Condition	100.0%
2)	Type of Fuel (By Weight)	
	Biomass %	100.
3)	Main Steam, KLb/Hr	279.
4)	Excess Air, %	20.
5)	Calcium to Sulfur Ratio	0.0:1
6)	Fuel Heat Input, MMBtu/Hr	440.
7)	Bottom Ash/Fly Ash Split	50./50.
8)	Quantity, Lb/Hr	
	1. Fuel	92769.
	2. Limestone	0.
	3. Air (x1000)	603.
	4. Gas (x1000)	685.
	5. Ash (Total)	10601.
9)	Pressure, Psig	
	1. Ecomomizer Inlet	1700.
	2. Drum	1640.
	3. Superheater Outlet	1500.
10)	Steam/Water Temperatures, F.	
	1. Entering Economizer	335.
	2. Drum	609.
	3. Superheater Outlet	950.
11)	Air Temperatures, F.	
	1. Entering Fans	80.
	2. Leaving Fans (Avg.)	100.
12)	Exit Gas Temp., F.	300.
13)	Efficiency Losses, %	
	1. Dry Flue Gas	6.65
	2. Moisture in Fuel	8.17
	3. Moisture from Hydrogen	9.05
	4. Unburned Carbon	1.00
	5. Radiation	0.30
	6. Unmeasured Losses	1.67
	SUM OF LOSSES	26.84
	BOILER EFFICIENCY	73.16
14)	Fan Operating Horsepower	
	1. Primary Air Fan	1136.
	2. Secondary Air Fan	347.
	3. High Pres. Blower	179.
	4. Induced Draft Fan	1081.

3. EMISSIONS

3.1 Emissions

1) SO2	
Lb/Hr	148.27
Ppm d.v.	116.
Lb/MMBtu	0.337
Percent Retention	0.0
2) NOx	
Lb/Hr	176.04
Ppm d.v.	191.
Lb/MMBtu	0.400
3) CO	
Lb/Hr	66.01
Ppm d.v.	118.
Lb/MMBtu	0.150
4) VOC	
Lb/Hr	11.00
Ppm d.v.	34.
Lb/MMBtu	0.025
5) Particulate Matter	
Lb/Hr	13.20
Lb/MMBtu	0.030
*Gr/Acf	0.007

* Pressure = 14.4 Psia & 300. F.

AHLSTROM PYROPOWER	TITLE RADIAN CORP./NREL/MIDWEST		PROPOSAL NO. B91-95
	279,000 LB/HR -1500 PSIG -950° F		DRAWING NO. B9195-A01
	DRAWN by: RB	APPROVED by: RB	DATE 11/05/91	PAGE 1 of 2

L = 92 ft

W = 52 ft

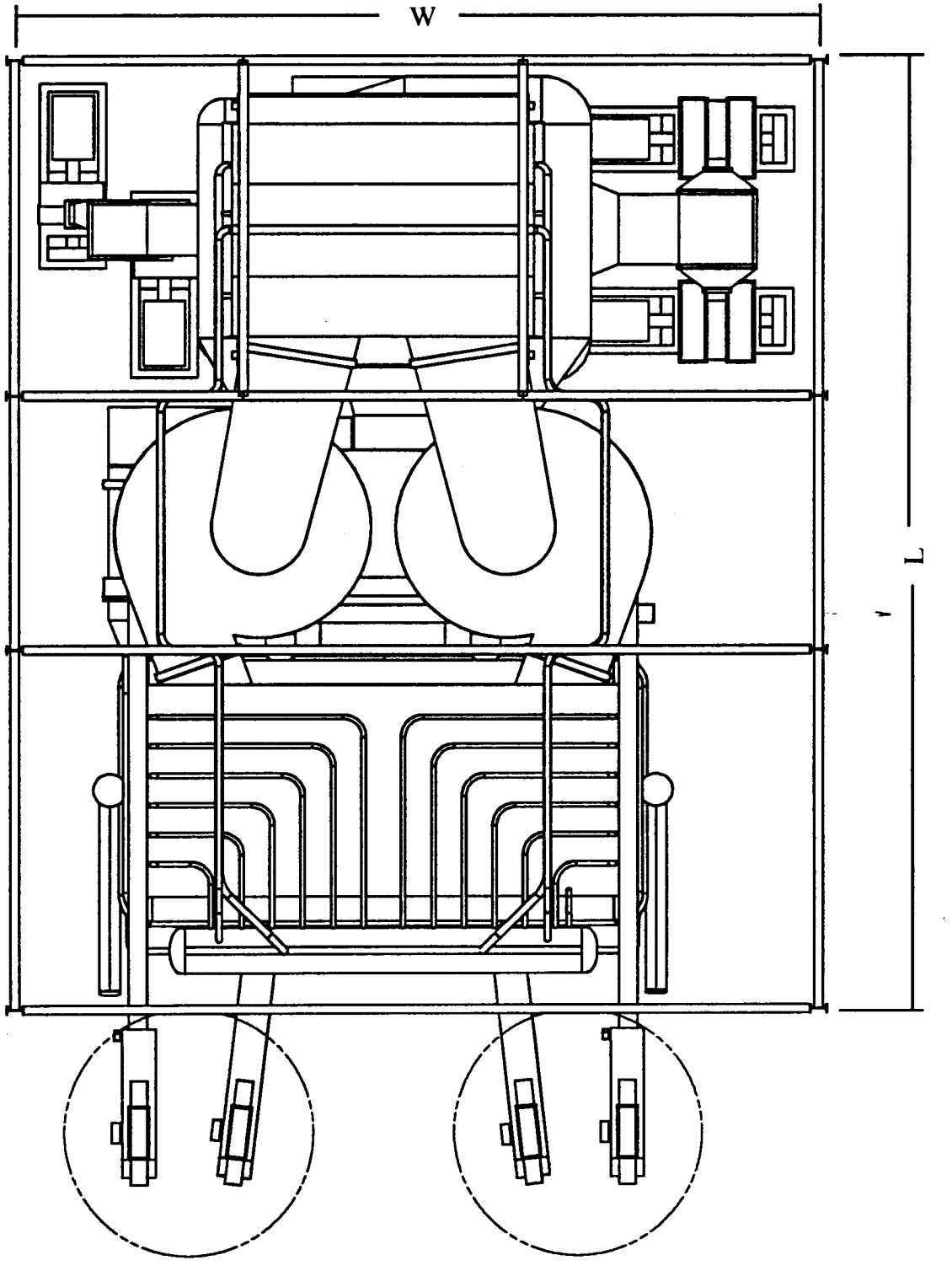

AHLSTROM PYROPOWER	TITLE RADIAN CORP./NREL/MIDWEST		PROPOSAL NO. B91-95
	279,000 LB/HR -1500 PSIG -950° F		DRAWING NO. B9195-A02
	DRAWN by: SJC	APPROVED by: RB	DATE 11/05/91	PAGE 2 of 2

H = 124 ft

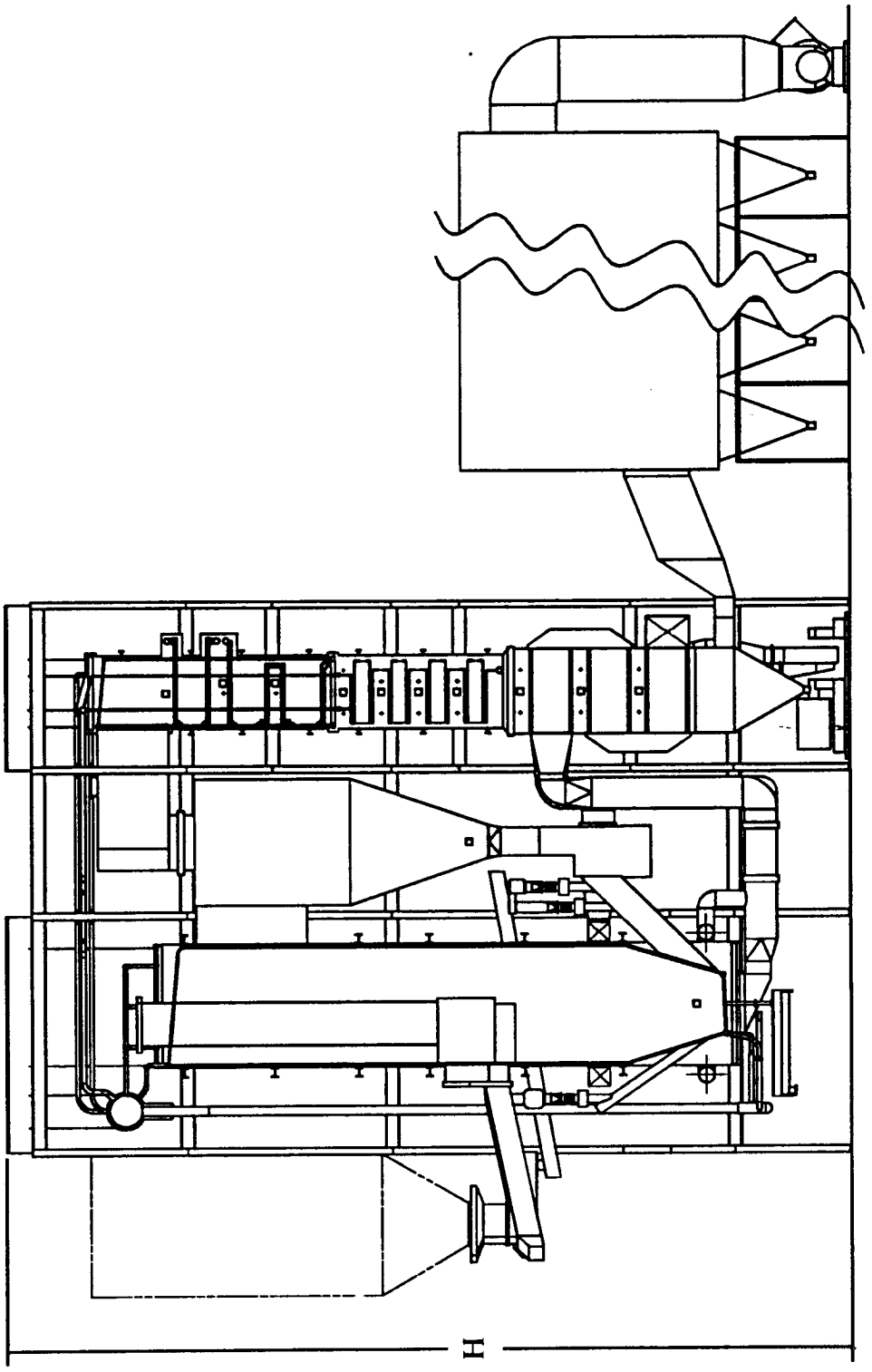

ELEVATION VIEW

1. DESIGN CONDITIONS

1.1 Site Data

Plant Elevation, Ft.	509.
Ambient Air Pressure, Psia	14.4
Ambient Air Temperature, F.	80.
Relative Humidity, %	60.
Moisture, Lb/Lb of Dry Air	0.013

1.2 Steam Conditions

Load Condition	100.0%
Flow, Lb/Hr	276000.
Pressure, Psig	1500.
Temperature, F.	950.
Feedwater Temp., F.	335.

1.3 Fuel Analysis

WET BASIS	Biomass
Carbon	37.92
Hydrogen	4.15
Sulfur	0.07
Nitrogen	1.70
Oxygen	10.21
Ash	11.55
Moisture	34.40
HHV, Btu/Lb	4688.

DRY BASIS	Biomass
Carbon	57.80
Hydrogen	6.33
Sulfur	0.11
Nitrogen	2.59
Oxygen	15.56
Ash	17.61
HHV, Btu/Lb	7146.

1.4 Limestone Analysis

	WT. PERCENT
CaCO3	90.00
MgCO3	4.50
Inert	4.50
Water	1.00

1.5 Ash Analysis

(Wt. Percent)	100.0%
Calcium Oxide	0.00
Magnesium Oxide	0.00
Calcium Sulfate	0.00
Magnesium Sulfate	0.00
Limestone Inert	0.00
Fuel Ash	97.28
Unburned Fuel	2.72

2. PERFORMANCE DATA

2.1 Performance Data

1) Load Condition	100.0%
2) Type of Fuel (By Weight)	
Biomass %	100.
3) Main Steam, KLb/Hr	276.
4) Excess Air, %	20.
5) Calcium to Sulfur Ratio	0.0:1
6) Fuel Heat Input, MMBtu/Hr	436.
7) Bottom Ash/Fly Ash Split	50./50.
8) Quantity, Lb/Hr	
1. Fuel	92936.
2. Limestone	0.
3. Air (x1000)	600.
4. Gas (x1000)	682.
5. Ash (Total)	11035.
9) Pressure, Psig	
1. Ecomomizer Inlet	1700.
2. Drum	1640.
3. Superheater Outlet	1500.
10) Steam/Water Temperatures, F.	
1. Entering Economizer	335.
2. Drum	609.
3. Superheater Outlet	950.
11) Air Temperatures, F.	
1. Entering Fans	80.
2. Leaving Fans (Avg.)	100.
12) Exit Gas Temp., F.	300.
13) Efficiency Losses, %	
1. Dry Flue Gas	6.70
2. Moisture in Fuel	8.25
3. Moisture from Hydrogen	8.90
4. Unburned Carbon	1.00
5. Radiation	0.35
6. Unmeasured Losses	1.70
SUM OF LOSSES	26.90
BOILER EFFICIENCY	73.10
14) Fan Operating Horsepower	
1. Primary Air Fan	1130.
2. Secondary Air Fan	346.
3. High Pres. Blower	179.
4. Induced Draft Fan	1075.

Boiler and Steam System Sketch

Biomass-to-Ethanol Process

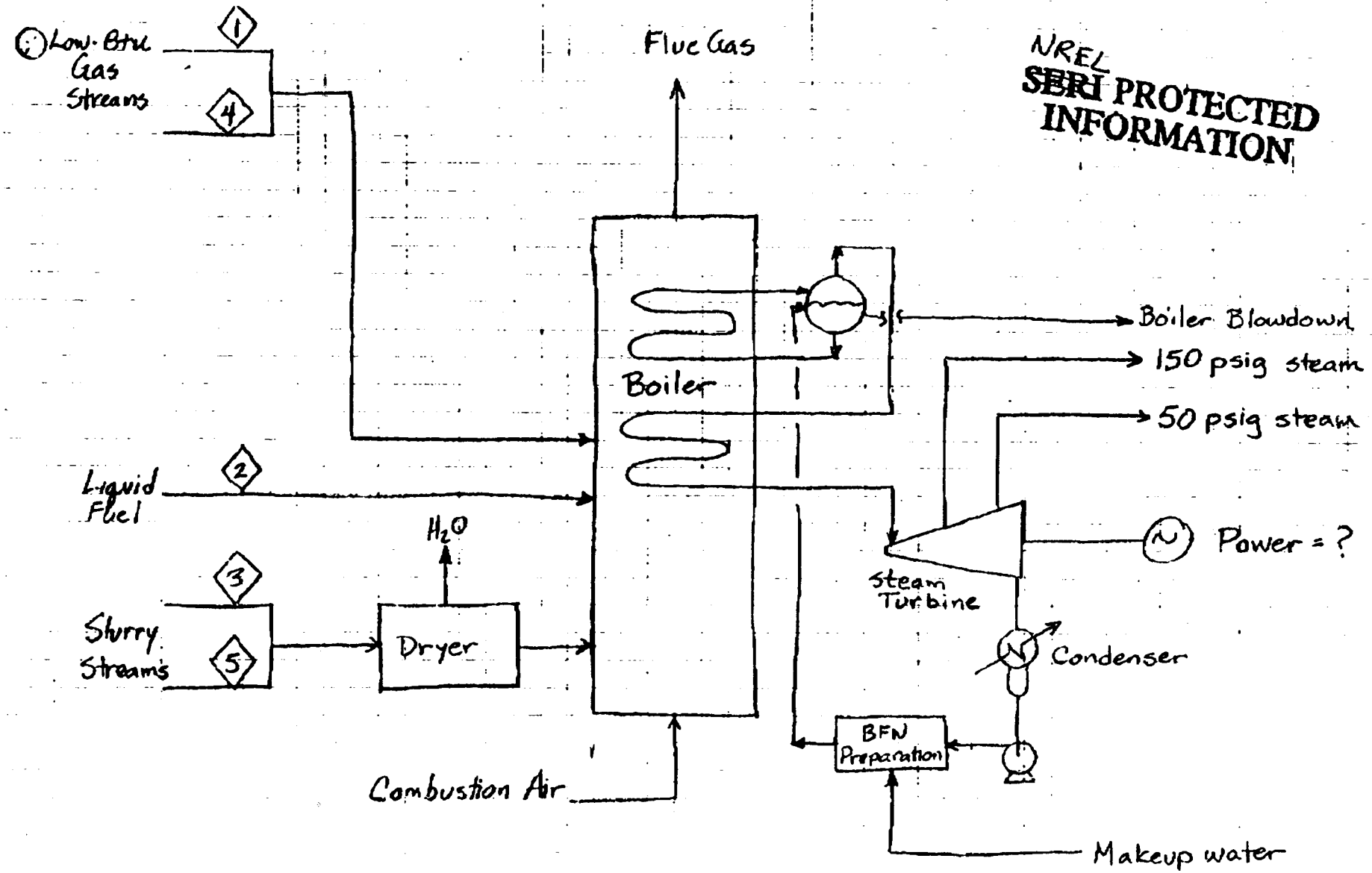

Biomass-to-Ethanol Process

Additional Information

Table 1 : Process Steam Requirements in lb/hr

Case	50 PSIG, Sat.	150 PSIG, sat.
Great Plains	161,800	43,100
Northeast	162,300	43,100
Southeast	172,000	43,100
Midwest/Lake St.	167,200	43,100
Pacific N.W.	155,400	43,100
Mun. Solid Waste	160,700	43,100

Table 2 : Stream Conditions for streams listed in following material balances.

Stream #	Pressure (psig)	Temp °F
1	10	100
2	25	100
3	~0	220
4	10	100
5	~0	70

NREL -
~~SERI~~ PROTECTED
INFORMATION

ENVIRONMENTAL ANALYSIS FOR THE UTILITY SYSTEMS IN THE BIOMASS-TO-ETHANOL PROCESS

MATERIAL BALANCE FOR THE BOILER SYSTEM OF THE BIOMASS TO ETHANOL PROCESS

NREL
~~SERI~~ PROTECTED INFORMATION

CASE: NORTHEAST

DESIGN BASIS: TECHNOLOGY IN 2010

	STRM.NO. 1		STRM.NO. 2		STRM.NO. 3		STRM.NO. 4		STRM.NO. 5		STRM.NO. 6	
	OVERHEAD VENT FROM RECTIFICATION COL.		FUSEL OIL TO BOILER		LIGNIN TO BOILER		METHANE TO BOILER		SOLIDS TO BOILER FM WASTE TREAT.		TOTAL OF ALL STREAMS TO BOILER	
COMPONENT	LB/HR	WT %	LB/HR	WT %	LB/HR	WT %	LB/HR	WT %	LB/HR	WT %	LB/HR	WT %
WATER	0	0.00	38	32.69	48,704	46.60	144	3.53	1,314	50.00	50,200	44.70
CELLULOSE	0	0.00	0	0.00	7	0.01	0	0.00	0	0.00	7	0.01
XYLAN	0	0.00	0	0.00	0	0.00	0	0.00	0	0.00	0	0.00
SOLUBLE SOLIDS	0	0.00	1	0.93	14,160	13.55	0	0.00	0	0.00	14,161	12.61
ASH	0	0.00	0	0.21	4,502	4.31	0	0.00	0	0.00	4,502	4.01
LIGNIN	0	0.00	0	0.03	21,405	20.48	0	0.00	32	1.22	21,437	19.09
CRUDE PROTEIN	0	0.00	0	0.20	6,381	6.10	0	0.00	223	8.49	6,604	5.88
H2SO4	0	0.00	0	0.00	0	0.00	0	0.00	0	0.00	0	0.00
GLUCOSE	0	0.00	0	0.00	0	0.00	0	0.00	0	0.00	0	0.00
XYLOSE	0	0.00	0	0.12	183	0.18	0	0.00	0	0.00	183	0.16
HMF	0	0.00	0	0.02	37	0.03	0	0.00	0	0.00	37	0.03
FURFURAL	0	0.00	0	0.00	0	0.00	0	0.00	0	0.00	0	0.00
LIME	0	0.00	0	0.00	0	0.00	0	0.00	0	0.00	0	0.00
GYPSUM (SOL.)	0	0.00	0	0.07	108	0.10	0	0.00	75	2.87	184	0.16
GYPSUM (INSOL.)	0	0.00	0	0.01	4,805	4.60	0	0.00	0	0.00	4,805	4.28
O2	0	0.00	0	0.00	0	0.00	0	0.00	0	0.00	0	0.00
N2	0	0.00	0	0.00	0	0.00	0	0.00	0	0.00	0	0.00
CO2	0	0.00	0	0.00	0	0.00	2,123	52.09	0	0.00	2,123	1.89
NUTRIENTS	0	0.00	0	0.00	0	0.00	0	0.00	0	0.00	0	0.00
CELLULASE	0	0.00	0	0.00	21	0.02	0	0.00	0	0.00	21	0.02
ANTIFOAM	0	0.00	0	0.00	0	0.00	0	0.00	0	0.00	0	0.00
NH3	0	0.00	0	0.00	0	0.00	0	0.00	0	0.00	0	0.00
ETHANOL	60	6.30	0	0.00	0	0.00	0	0.00	0	0.00	60	0.05
FUSAL OILS	0	0.00	76	65.00	0	0.00	0	0.00	0	0.00	76	0.07
GLYCEROL	0	0.00	1	0.72	1,139	1.09	0	0.00	0	0.00	1,139	1.01
ACETALDEHYDE	890	93.70	0	0.00	0	0.00	0	0.00	0	0.00	890	0.79
CELL MASS	0	0.00	0	0.02	3,872	2.94	0	0.00	983	37.43	4,055	3.61
CORN STEEP LIQ.	0	0.00	0	0.00	0	0.00	0	0.00	0	0.00	0	0.00
METHANE	0	0.00	0	0.00	0	0.00	1,809	44.38	0	0.00	1,809	1.61
TOTAL	949	100.00	117	100.00	104,522	100.00	4,076	100.00	2,628	100.00	112,292	100.00

ENVIRONMENTAL ANALYSIS FOR THE UTILITY SYSTEMS IN THE BIOMASS-TO-ETHANOL PROCESS

MATERIAL BALANCE FOR THE BOILER SYSTEM OF THE BIOMASS TO ETHANOL PROCESS

NREL
~~SERI~~ PROTECTED INFORMATION

CASE: SOUTHEAST

DESIGN BASIS: TECHNOLOGY IN 2010

	STRM.NO. 1		STRM.NO. 2		STRM.NO. 3		STRM.NO. 4		STRM.NO. 5		STRM.NO. 6	
	OVERHEAD VENT FROM RECTIFICATION COL.		FUSEL OIL TO BOILER		LIGNIN TO BOILER		METHANE TO BOILER		SOLIDS TO BOILER FM WASTE TREAT.		TOTAL OF ALL STREAMS TO BOILER	
COMPONENT	LB/HR	WT %	LB/HR	WT %	LB/HR	WT %	LB/HR	WT %	LB/HR	WT %	LB/HR	WT %
WATER	0	0.00	39	32.96	46,592	47.18	143	3.53	1,257	50.00	48,031	45.14
CELLULOSE	0	0.00	0	0.00	7	0.01	0	0.00	0	0.00	7	0.01
XYLAN	0	0.00	0	0.00	0	0.00	0	0.00	0	0.00	0	0.00
SOLUBLE SOLIDS	0	0.00	1	0.69	10,009	10.14	0	0.00	0	0.00	10,010	9.41
ASH	0	0.00	0	0.16	3,437	3.48	0	0.00	0	0.00	3,437	3.23
LIGNIN	0	0.00	0	0.03	24,868	25.18	0	0.00	38	1.53	24,906	23.41
CRUDE PROTEIN	0	0.00	0	0.15	4,453	4.51	0	0.00	162	6.45	4,615	4.34
H2SO4	0	0.00	0	0.00	0	0.00	0	0.00	0	0.00	0	0.00
GLUCOSE	0	0.00	0	0.00	0	0.00	0	0.00	0	0.00	0	0.00
XYLOSE	0	0.00	0	0.13	177	0.18	0	0.00	0	0.00	177	0.17
HMF	0	0.00	0	0.02	31	0.03	0	0.00	0	0.00	31	0.03
FURFURAL	0	0.00	0	0.00	0	0.00	0	0.00	0	0.00	0	0.00
LIME	0	0.00	0	0.00	0	0.00	0	0.00	0	0.00	0	0.00
GYPSUM (SOL.)	0	0.00	0	0.07	183	0.19	0	0.00	81	3.22	185	0.17
GYPSUM (INSOL.)	0	0.00	0	0.01	4,818	4.88	0	0.00	0	0.00	4,818	4.53
O2	0	0.00	0	0.00	0	0.00	0	0.00	0	0.00	0	0.00
N2	0	0.00	0	0.00	0	0.00	0	0.00	0	0.00	0	0.00
CO2	0	0.00	0	0.00	0	0.00	2,106	52.09	0	0.00	2,106	1.98
NUTRIENTS	0	0.00	0	0.00	0	0.00	0	0.00	0	0.00	0	0.00
CELLULASE	0	0.00	0	0.00	20	0.02	0	0.00	0	0.00	20	0.02
ANTIFOAM	0	0.00	0	0.00	0	0.00	0	0.00	0	0.00	0	0.00
NH3	0	0.00	0	0.00	0	0.00	0	0.00	0	0.00	0	0.00
ETHANOL	62	6.34	0	0.00	0	0.00	0	0.00	0	0.00	62	0.06
FUSAL OILS	0	0.00	78	65.00	0	0.00	0	0.00	0	0.00	78	0.07
GLYCEROL	0	0.00	1	0.76	1,081	1.09	0	0.00	0	0.00	1,082	1.02
ACETALDEHYDE	913	93.66	0	0.00	0	0.00	0	0.00	0	0.00	913	0.86
CELL MASS	0	0.00	0	0.02	3,161	3.20	0	0.00	975	38.80	4,137	3.89
CORN STEEP LIQ.	0	0.00	0	0.00	0	0.00	0	0.00	0	0.00	0	0.00
METHANE	0	0.00	0	0.00	0	0.00	1,794	44.38	0	0.00	1,794	1.69
TOTAL	975	100.00	120	100.00	98,757	100.00	4,043	100.00	2,514	100.00	106,408	100.00

ENVIRONMENTAL ANALYSIS FOR THE UTILITY SYSTEMS IN THE BIOMASS-TO-ETHANOL PROCESS

MATERIAL BALANCE FOR THE BOILER SYSTEM OF THE BIOMASS TO ETHANOL PROCESS

NREL
SERI PROTECTED INFORMATION

CASE: MIDWEST/LAKE ST.

DESIGN BASIS: TECHNOLOGY IN 2010

	STRM.NO. 1		STRM.NO. 2		STRM.NO. 3		STRM.NO. 4		STRM.NO. 5		STRM.NO. 6	
	OVERHEAD VENT FROM RECTIFICATION COL.		FUSEL OIL TO BOILER		LIGNIN TO BOILER		METHANE TO BOILER		SOLIDS TO BOILER FR WASTE TREAT.		TOTAL OF ALL STREAMS TO BOILER	
COMPONENT	LB/HR	WT %	LB/HR	WT %	LB/HR	WT %	LB/HR	WT %	LB/HR	WT %	LB/HR	WT %
WATER	0	0.00	40	32.70	49,257	46.80	135	3.53	1,265	50.00	50,697	44.98
CELLULOSE	0	0.00	0	0.00	7	0.01	0	0.00	0	0.00	7	0.01
XYLAN	0	0.00	0	0.00	0	0.00	0	0.00	0	0.00	0	0.00
SOLUBLE SOLIDS	0	0.00	1	0.88	13,217	12.56	0	0.00	0	0.00	13,218	11.73
ASH	0	0.00	0	0.20	4,263	4.05	0	0.00	0	0.00	4,263	3.78
LIGNIN	0	0.00	0	0.03	22,150	21.05	0	0.00	32	1.26	22,182	19.68
CRUDE PROTEIN	0	0.00	0	0.22	6,887	6.54	0	0.00	232	9.16	7,118	6.32
H2SO4	0	0.00	0	0.00	0	0.00	0	0.00	0	0.00	0	0.00
GLUCOSE	0	0.00	0	0.00	0	0.00	0	0.00	0	0.00	0	0.00
XYLOSE	0	0.00	0	0.11	166	0.16	0	0.00	0	0.00	166	0.15
HMF	0	0.00	0	0.02	33	0.03	0	0.00	0	0.00	33	0.03
FURFURAL	0	0.00	0	0.00	0	0.00	0	0.00	0	0.00	0	0.00
LIME	0	0.00	0	0.00	0	0.00	0	0.00	0	0.00	0	0.00
GYPSUM (SOL.)	0	0.00	0	0.07	109	0.10	0	0.00	76	3.01	186	0.16
GYPSUM (INSOL.)	0	0.00	0	0.01	4,819	4.58	0	0.00	0	0.00	4,819	4.27
O2	0	0.00	0	0.00	0	0.00	0	0.00	0	0.00	0	0.00
N2	0	0.00	0	0.00	0	0.00	0	0.00	0	0.00	0	0.00
CO2	0	0.00	0	0.00	0	0.00	1,998	52.09	0	0.00	1,998	1.77
NUTRIENTS	0	0.00	0	0.00	0	0.00	0	0.00	0	0.00	0	0.00
CELLULASE	0	0.00	0	0.00	21	0.02	0	0.00	0	0.00	21	0.02
ANTIFOAM	0	0.00	0	0.00	0	0.00	0	0.00	0	0.00	0	0.00
NH3	0	0.00	0	0.00	0	0.00	0	0.00	0	0.00	0	0.00
ETHANOL	60	6.08	0	0.00	0	0.00	0	0.00	0	0.00	60	0.05
FUSAL OILS	0	0.00	79	65.00	0	0.00	0	0.00	0	0.00	79	0.07
GLYCEROL	0	0.00	1	0.74	1,126	1.07	0	0.00	0	0.00	1,127	1.00
ACETALDEHYDE	923	93.92	0	0.00	0	0.00	0	0.00	0	0.00	923	0.82
CELL MASS	0	0.00	0	0.02	3,196	3.04	0	0.00	925	36.58	4,121	3.66
CORN STEEP LIQ.	0	0.00	0	0.00	0	0.00	0	0.00	0	0.00	0	0.00
METHANE	0	0.00	0	0.00	0	0.00	1,702	44.38	0	0.00	1,702	1.51
TOTAL	983	100.00	121	100.00	105,250	100.00	3,836	100.00	2,530	100.00	112,719	100.00

ENVIRONMENTAL ANALYSIS FOR THE UTILITY SYSTEMS IN THE BIOMASS-TO-ETHANOL PROCESS

MATERIAL BALANCE FOR THE BOILER SYSTEM OF THE BIOMASS TO ETHANOL PROCESS

NREL
~~SERI~~ PROTECTED INFORMATION

CASE: PAC. NORTHWEST

DESIGN BASIS: TECHNOLOGY IN 2010

	STRM.NO. 1		STRM.NO. 2		STRM.NO. 3		STRM.NO. 4		STRM.NO. 5		STRM.NO. 6	
	OVERHEAD VENT FROM RECTIFICATION COL.		FUSEL OIL TO BOILER		LIGNIN TO BOILER		METHANE TO BOILER		SOLIDS TO BOILER FR WASTE TREAT.		TOTAL OF ALL STREAMS TO BOILER	
COMPONENT	LB/HR	WT %	LB/HR	WT %	LB/HR	WT %	LB/HR	WT %	LB/HR	WT %	LB/HR	WT %
WATER	0	0.00	45	33.68	58,197	48.09	91	3.53	789	50.00	59,123	46.78
CELLULOSE	0	0.00	0	0.00	8	0.01	0	0.00	0	0.00	8	0.01
XYLAN	0	0.00	0	0.00	0	0.00	0	0.00	0	0.00	0	0.00
SOLUBLE SOLIDS	0	0.00	0	0.25	5,069	4.19	0	0.00	0	0.00	5,069	4.01
ASH	0	0.00	0	0.09	2,627	2.17	0	0.00	0	0.00	2,627	2.08
LIGNIN	0	0.00	0	0.04	43,701	36.12	0	0.00	49	3.09	43,750	34.62
CRUDE PROTEIN	0	0.00	0	0.03	1,398	1.16	0	0.00	37	2.35	1,435	1.14
H2SO4	0	0.00	0	0.00	0	0.00	0	0.00	0	0.00	0	0.00
GLUCOSE	0	0.00	0	0.00	0	0.00	0	0.00	0	0.00	0	0.00
XYLOSE	0	0.00	0	0.06	104	0.09	0	0.00	0	0.00	104	0.08
HMF	0	0.00	0	0.02	40	0.03	0	0.00	0	0.00	40	0.03
FURFURAL	0	0.00	0	0.00	0	0.00	0	0.00	0	0.00	0	0.00
LIME	0	0.00	0	0.00	0	0.00	0	0.00	0	0.00	0	0.00
GYPSUM (SOL.)	0	0.00	0	0.07	129	0.11	0	0.00	78	4.93	207	0.16
GYPSUM (INSOL.)	0	0.00	0	0.00	4,755	3.93	0	0.00	0	0.00	4,755	3.76
O2	0	0.00	0	0.00	0	0.00	0	0.00	0	0.00	0	0.00
N2	0	0.00	0	0.00	0	0.00	0	0.00	0	0.00	0	0.00
CO2	0	0.00	0	0.00	0	0.00	1,369	52.09	0	0.00	1,369	1.07
NUTRIENTS	0	0.00	0	0.00	0	0.00	0	0.00	0	0.00	0	0.00
CELLULASE	0	0.00	0	0.00	21	0.02	0	0.00	0	0.00	21	0.02
ANTIFOAM	0	0.00	0	0.00	0	0.00	0	0.00	0	0.00	0	0.00
MBS	0	0.00	0	0.00	0	0.00	0	0.00	0	0.00	0	0.00
ETHANOL	57	5.25	0	0.00	(0)	-0.00	0	0.00	0	0.00	57	0.04
FUSAL OILS	0	0.00	87	65.00	0	0.00	0	0.00	0	0.00	87	0.07
GLYCEROL	0	0.00	1	0.73	1,332	1.10	0	0.00	0	0.00	1,333	1.06
ACETALDEHYDE	1,026	94.75	0	0.00	0	0.00	0	0.00	0	0.00	1,026	0.81
CELL MASS	0	0.00	0	0.02	3,624	3.00	0	0.00	625	39.63	4,249	3.36
CORN STEEP LIQ.	0	0.00	0	0.00	0	0.00	0	0.00	0	0.00	0	0.00
METHANE	0	0.00	0	0.00	0	0.00	1,149	44.38	0	0.00	1,149	0.91
TOTAL	1,080	100.00	134	100.00	121,005	100.00	2,590	100.00	1,577	100.00	126,387	100.00

ENVIRONMENTAL ANALYSIS FOR THE UTILITY SYSTEMS IN THE BIOMASS-TO-ETHANOL PROCESS

MATERIAL BALANCE FOR THE BOILER SYSTEM OF THE BIOMASS TO ETHANOL PROCESS

NREL
~~SERI~~ PROTECTED
INFORMATION

CASE: MUN. SOLID WASTE

DESIGN BASIS: TECHNOLOGY IN 2000

	STRM.NO. 1		STRM.NO. 2		STRM.NO. 3		STRM.NO. 4		STRM.NO. 5		STRM.NO. 6	
	OVERHEAD VENT FROM RECTIFICATION COL.		FUSEL OIL TO BOILER		LIGNIN TO BOILER		METHANE TO BOILER		SOLIDS TO BOILER FM WASTE TREAT.		TOTAL OF ALL STREAMS TO BOILER	
COMPONENT	LB/HR	WT %	LB/HR	WT %	LB/HR	WT %	LB/HR	WT %	LB/HR	WT %	LB/HR	WT %
WATER	0	0.00	49	33.11	64,601	47.35	69	3.53	748	50.00	65,458	46.37
CELLULOSE	0	0.00	0	0.00	8	0.01	0	0.00	0	0.00	8	0.01
XYLAN	0	0.00	0	0.00	0	0.00	0	0.00	0	0.00	0	0.00
SOLUBLE SOLIDS	0	0.00	1	0.62	14,667	10.74	0	0.00	0	0.00	14,668	10.38
ASH	0	0.00	0	0.16	24,834	18.20	0	0.00	0	0.00	24,834	17.59
LIGNIN	0	0.00	0	0.02	16,644	12.20	0	0.00	23	1.56	16,667	11.81
CRUDE PROTEIN	0	0.00	0	0.16	5,327	3.90	0	0.00	169	11.40	5,496	3.89
H2SO4	0	0.00	0	0.00	0	0.00	0	0.00	0	0.00	0	0.00
GLUCOSE	0	0.00	0	0.00	0	0.00	0	0.00	0	0.00	0	0.00
XYLOSE	0	0.00	0	0.03	63	0.05	0	0.00	0	0.00	63	0.04
HMF	0	0.00	0	0.02	46	0.03	0	0.00	0	0.00	46	0.03
FURFURAL	0	0.00	0	0.00	0	0.00	0	0.00	0	0.00	0	0.00
LIME	0	0.00	0	0.00	0	0.00	0	0.00	0	0.00	0	0.00
GYPSUM (SOL.)	0	0.00	0	0.07	143	0.11	0	0.00	77	5.17	220	0.16
GYPSUM (INSOL.)	0	0.00	0	0.01	4,783	3.51	0	0.00	0	0.00	4,783	3.39
O2	0	0.00	0	0.00	0	0.00	0	0.00	0	0.00	0	0.00
N2	0	0.00	0	0.00	0	0.00	0	0.00	0	0.00	0	0.00
CO2	0	0.00	0	0.00	0	0.00	1,017	52.09	0	0.00	1,017	0.72
NUTRIENTS	0	0.00	0	0.00	0	0.00	0	0.00	0	0.00	0	0.00
CELLULASE	0	0.00	0	0.00	31	0.02	0	0.00	0	0.00	31	0.02
ANTIFOAM	0	0.00	0	0.00	0	0.00	0	0.00	0	0.00	0	0.00
NH3	0	0.00	0	0.00	0	0.00	0	0.00	0	0.00	0	0.00
ETHANOL	52	4.42	0	0.00	(0)	-0.00	0	0.00	0	0.00	52	0.04
FUSEL OILS	0	0.00	95	65.00	0	0.00	0	0.00	0	0.00	95	0.07
GLYCEROL	0	0.00	1	0.78	1,564	1.15	0	0.00	0	0.00	1,566	1.11
ACETALDEHYDE	1,121	95.58	0	0.00	0	0.00	0	0.00	0	0.00	1,121	0.79
CELL MASS	0	0.00	0	0.02	3,734	2.74	0	0.00	471	31.86	4,206	2.98
CORN STEEP LIQ.	0	0.00	0	0.00	0	0.00	0	0.00	0	0.00	0	0.00
METHANE	0	0.00	0	0.00	0	0.00	866	44.38	0	0.00	866	0.61
TOTAL	1,173	100.00	147	100.00	136,426	100.00	1,952	100.00	1,479	100.00	141,178	100.00

Brief process description from a current conceptual design. For information only.

NREL
~~SERI~~ PROTECTED INFORMATION

Boiler and Steam Distribution The boiler (HB-901) is designed to burn liquid, gaseous, and solid fuels and to generate 1100 psia steam with 300°F of superheat. The boiler is sized to handle the waste streams from the plant. Gaseous and liquid fuels are burned directly and wet solids are first sent to a drying system that dries and fluidizes the solids into the boiler using boiler flue gas. Based on vendor calculations, the boiler efficiency, including drying, is 83.6%. Ash and gypsum solids left over after combustion are sent to off-site disposal. Electrical power is generated by letting steam down through the turbogenerator. Steam is let down to the two levels required by the process, 150 psig (366°F) and 50 psig (298°F), and any remaining steam is condensed at 89 mm Hg. Condensate is returned to the boiler feed water (BFW) system and recycled back to the boiler.

Boiler Feed Water System This system is based on the design of Badger (1984) and is sized by ratioing our flow rate to the flow rate of the Badger design. All recoverable condensate from the steam system is collected in the condensate collection tank (T-930) and then pumped by the condensate pump (PP-910A/S) through the condensate polisher (GU-904A/S) to the condensate surge drum (MS-904). Fresh makeup water is added to the condensate surge drum through the demineralizer (GU-903A/B). The fresh water makeup rate is assumed to be 3.0% of steam usage plus steam used for direct injection into the process (i.e., steam injected into the wood slurry during impregnation and prehydrolysis) and steam lost in the deaerator. Condensate and makeup water is transfered by the deaerator pump (PP-909A/S) to the deaerator (GV-906). The deaerator operates at 10 psig (68.9 kPa) and expels air and steam to the atmosphere. Low-pressure steam for deaeration is supplied to the deaerator from the 50 psig distribution header, by flashes from the condensate collection tank, and from the boiler blowdown flash drum (MS-902). Boiler blowdown is collected in the blowdown flash drum (MS-902) and then is pumped by the blowdown pump (PP-906A/S) to aerobic digestion.

Deaerated boiler feedwater is treated with hydrazine and ammonia in the deaerator. Hydrazine is stored in the hydrazine drum (MS-903) and is pumped by the hydrazine transfer pump (PP-907) to be mixed with condensate in hydrazine addition unit (GU-907), which is then pumped to the deaerator. Ammonia is mixed with condensate in ammonia addition unit (GU-908) and then is fed to the deaerator. Phosphate dumped from bags is mixed with condensate in the phosphate addition unit (GU-909) and then used to dose the boiler steam drums. Deaerated and treated water is transferred by the high-pressure BFW pump (PP-908A/S) to the boilers.

Process Water System This system was based on the design of Badger (1984) and was sized by ratioing our flow rate to the flow rate of the Badger design. Process water is prepared by pumping well water with the well water pump (PP-913A/S) through a sand and anthracite filter (GF-901). A small fraction of the water (before filtration) is diverted to the wood washing pond. Process water transfer pump (PP-902A/S) feeds filtered water to the process water tank (T-901). Backwash feed pump (PP-904A/B) provides water for backwashing of the filter (GF-901). Backwash overflow from the filter is collected in the backwash transfer tank (T-905) and then transported by the backwash transfer pump (PP-905A/S) to the secondary clarifier (GV-808). Process water is distributed to the process water ring main by the process water circulating pump (PP-903A/S).

Turbogenerator The turbogenerator is sized based on the flow rate of steam from the boiler by ABB Sprout-Bauer (vendor quote). Based on that quote, it has an efficiency of 78.5%. The turbogenerator (GZ-911) is rated for 1100 psia, 300°F superheated steam. The unit includes a condenser, vacuum ejector set, and controls. The turbine condensate pump (PP-901A/S) returns condensate to the BFW system. The generator output is 13500 VAC, which is transformed to 480 VAC, 60 Hz, 3 phase, and 120/200 VAC, 50 Hz, 3 phase.

Appendix C-3 — Higher Heating Values

Lignin	11478 Btu/lb (Shafizadeh 1984)
Cellulose	7464 Btu/lb (Shafizadeh 1984)
Methane	23984 Btu/lb (Himmelblau 1974)
Ethanol	12836 Btu/lb (Weast 1972)
Xylose	6747 Btu/lb (Weast 1972)
Xylan	7464 Btu/lb (assumed the same as cellulose)
Soluble solids	5000 Btu/lb (assumed)
Cellulase	5000 Btu/lb (assumed)
Glycerol	7774 Btu/lb (Weast 1972)
Acetaldehyde	12835 Btu/lb (Himmelblau 1974)
Methane	23984 Btu/lb (Himmelblau 1974)

Chemical Formulas for polymers + macromolecules

Cellulose	$(C_6H_{10}O_5)_n$
~~Hemicellulose~~	
Lignin	$(C_6H_{10}(OCH_3)_{1.3})_n$
Protein	$CH_{1.57}O_{0.31}N_{0.29}S_{0.007}$
Soluble Solids	$CH_{1.48}O_{0.19}$
Xylan	$(C_5H_8O_4)_n$
Cell Mass	$CH_{1.71}N_{0.17}O_{0.47}$

RADIAN
Corporation

FAX MESSAGE

TO: Cynthia Riley, NREL

FROM: Ron Bell, Radian/AUS

DATE: 20 December 1991

SUBJECT: **Fluidized Bed Boiler Emissions Reduction**

Cynthia:

I am sending you a packet that I received from Pyropower, which shows reduced NO_x and SO_2 emissions for each case. The reduction in ammonia was affected by adding limestone to the bed at 3.9:1 Ca/SO_2 ratio and injecting 200 lb/hr of ammonia into the flue gas from the bed. In all cases, SO_2 is reduced to 50 ppmv, dry. NO_x is reduced to the 50-70 ppmv, dry range. Pyropower has indicated that not much can be done in the way of combustion modifications to reduce the levels of CO. One possibility is to add a CO oxidation catalyst bed. This method of control can easily reduce the CO levels by 90%. This method of treatment would be quite expensive from a capital investment standpoint. The catalyst bed cost alone would be approximately $750,000.

Let me know if I can provide you with more information.

Regards,

Ron Bell

Ron Bell

RADIAN CORPORATION

(FAX) TELECOPY COVER SHEET

8501 Mo-Pac Boulevard, P.O. Box 201088
Austin, Texas 78720-1088 (512) 454-4797

Time In: Time Out: Date: 12/20/91 Pages to Follow: 1

TO: Cynthia Riley		**FROM:** Ron Bell	
Company Name	NREL	Fax Number	(303) 278-1524
City and State	Golden, CO	Confirmation No.	(303) 231-7638

Radian Offices

☐ Austin (bldg. 4)	(512) 454-8807 (bldg 1,2,3,4,7,9)	*80	☐ IV	Irvine, CA	*05
☐ Austin (8303)	(512) 345-9684 (bldg 8303)	—	☐ LA	El Segundo, CA	*04
☐ Austin (bldg. 6)	(512) 454-7129 (bldg 5,6,11)	*09	☐ LON	London, England	*21
☐ Austin	Bratton Ln (RESC/ESI)	*11	☐ LOU	Louisville, KY	*13
☐ Austin	Summit Park (bldg B)	*06	☐ MIL	Milwaukee, WI	*10
☐ ALG	Alamogordo, NM	*32	☐ OAK	LWA/Oak Ridge, TN	*81
☐ ATL	LWA/Atlanta, GA	*94	☐ PPK	Perimeter Park, NC	*07
☐ BAT ROU	Baton Rouge, LA	*18	☐ RTP	Research Triangle Park, NC	*01
☐ BOU	Boulder, CO	*33	☐ SAC	Sacramento, CA	*00
☐ CON	Concord, CA	*34	☐ SEA	Seattle, WA	*82
☐ DC	Herndon, VA	*02	☐ TPE	Taipei, Taiwan	*61
☐ DEN	Denver, CO	*57	☐ HSB	Hartford Steam Boiler	*08
☐ HOU	Houston, TX	*03			

If you have any problems receiving this FAX, please call Stephaine McCurry at (512) 454-4797 x 5001 Fax: (512) 345-9684

Comments:

ENVIRONMENTAL ANALYSIS FOR THE UTILITY SYSTEMS IN THE BIOMASS-TO-ETHANOL PROCESS

MATERIAL BALANCE FOR THE BOILER SYSTEM OF THE BIOMASS TO ETHANOL PROCESS

NREL

~~SERI~~ PROTECTED INFORMATION

CASE: GREAT PLAINS

DESIGN BASIS: TECHNOLOGY IN 2010

	STRM.NO. 1		STRM.NO. 2		STRM.NO. 3		STRM.NO. 4		STRM.NO. 5		STRM.NO. 6	
	OVERHEAD VENT FROM RECTIFICATION COL.		FUSEL OIL TO BOILER		LIGNIN TO BOILER		METHANE TO BOILER		SOLIDS TO BOILER FR WASTE TREAT.		TOTAL OF ALL STREAMS TO BOILER	
COMPONENT	LB/HR	WT %	LB/HR	WT %	LB/HR	WT %	LB/HR	WT %	LB/HR	WT %	LB/HR	WT %
WATER	0	0.00	36	32.33	47,548	46.05	154	3.53	1,426	50.00	49,163	44.10
CELLULOSE	0	0.00	0	0.00	6	0.01	0	0.00	0	0.00	6	0.01
XYLAN	0	0.00	0	0.00	0	0.00	0	0.00	0	0.00	0	0.00
SOLUBLE SOLIDS	0	0.00	1	1.03	14,386	13.93	0	0.00	0	0.00	14,387	12.91
ASH	0	0.00	0	0.43	8,502	8.23	0	0.00	0	0.00	8,502	7.63
LIGNIN	0	0.00	0	0.03	16,576	16.05	0	0.00	28	0.98	16,604	14.89
CRUDE PROTEIN	0	0.00	0	0.25	7,099	6.87	0	0.00	275	9.63	7,374	6.61
H2SO4	0	0.00	0	0.00	0	0.00	0	0.00	0	0.00	0	0.00
GLUCOSE	0	0.00	0	0.00	0	0.00	0	0.00	0	0.00	0	0.00
XYLOSE	0	0.00	0	0.14	216	0.21	0	0.00	0	0.00	217	0.19
HMF	0	0.00	0	0.02	33	0.03	0	0.00	0	0.00	33	0.03
FURFURAL	0	0.00	0	0.00	0	0.00	0	0.00	0	0.00	0	0.00
LIME	0	0.00	0	0.00	0	0.00	0	0.00	0	0.00	0	0.00
GYPSUM (SOL.)	0	0.00	0	0.07	106	0.10	0	0.00	74	2.61	180	0.16
GYPSUM (INSOL.)	0	0.00	0	0.01	4,787	4.64	0	0.00	0	0.00	4,787	4.29
O2	0	0.00	0	0.00	0	0.00	0	0.00	0	0.00	0	0.00
N2	0	0.00	0	0.00	0	0.00	0	0.00	0	0.00	0	0.00
CO2	0	0.00	0	0.00	0	0.00	2,265	52.09	0	0.00	2,265	2.03
NUTRIENTS	0	0.00	0	0.00	0	0.00	0	0.00	0	0.00	0	0.00
CELLULASE	0	0.00	0	0.00	22	0.02	0	0.00	0	0.00	22	0.02
ANTIFOAM	0	0.00	0	0.00	0	0.00	0	0.00	0	0.00	0	0.00
NAS	0	0.00	0	0.00	0	0.00	0	0.00	0	0.00	0	0.00
ETHANOL	60	6.62	0	0.00	(0)	-0.00	0	0.00	0	0.00	60	0.05
FUSAL OILS	0	0.00	72	65.00	0	0.00	0	0.00	0	0.00	72	0.06
GLYCEROL	0	0.00	1	0.69	1,081	1.05	0	0.00	0	0.00	1,081	0.97
ACETALDEHYDE	840	93.38	0	0.00	0	0.00	0	0.00	0	0.00	840	0.75
CELL MASS	0	0.00	0	0.92	2,901	2.81	0	0.00	1,049	36.78	3,950	3.54
CORN STEEP LIQ.	0	0.00	0	0.00	0	0.00	0	0.00	0	0.00	0	0.00
METHANE	0	0.00	0	0.00	0	0.00	1,930	44.38	0	0.00	1,930	1.73
TOTAL	900	100.00	110	100.00	103,262	100.00	4,349	100.00	2,853	100.00	111,474	100.00

3. EMISSIONS

3.1 Emissions

1) SO2	
Lb/Hr	129.97
Ppm d.v.	102.
Lb/MMBtu	0.298
Percent Retention	0.0
2) NOx	
Lb/Hr	174.27
Ppm d.v.	190.
Lb/MMBtu	0.400
3) CO	
Lb/Hr	65.35
Ppm d.v.	117.
Lb/MMBtu	0.150
4) VOC	
Lb/Hr	10.89
Ppm d.v.	34.
Lb/MMBtu	0.025
5) Particulate Matter	
Lb/Hr	13.07
Lb/MMBtu	0.030
*Gr/Acf	0.007

* Pressure = 14.4 Psia & 300. F.

AHLSTROM PYROPOWER	TITLE RADIAN CORP./NREL/NORTHEAST	PROPOSAL NO. B91-95
	276,000 LB/HR -1500 PSIG -950° F	DRAWING NO. B9195-A01
	DRAWN by: RB / APPROVED by: RB / DATE 11/05/91	PAGE 1 of 2

L = 92 ft

W = 52 ft

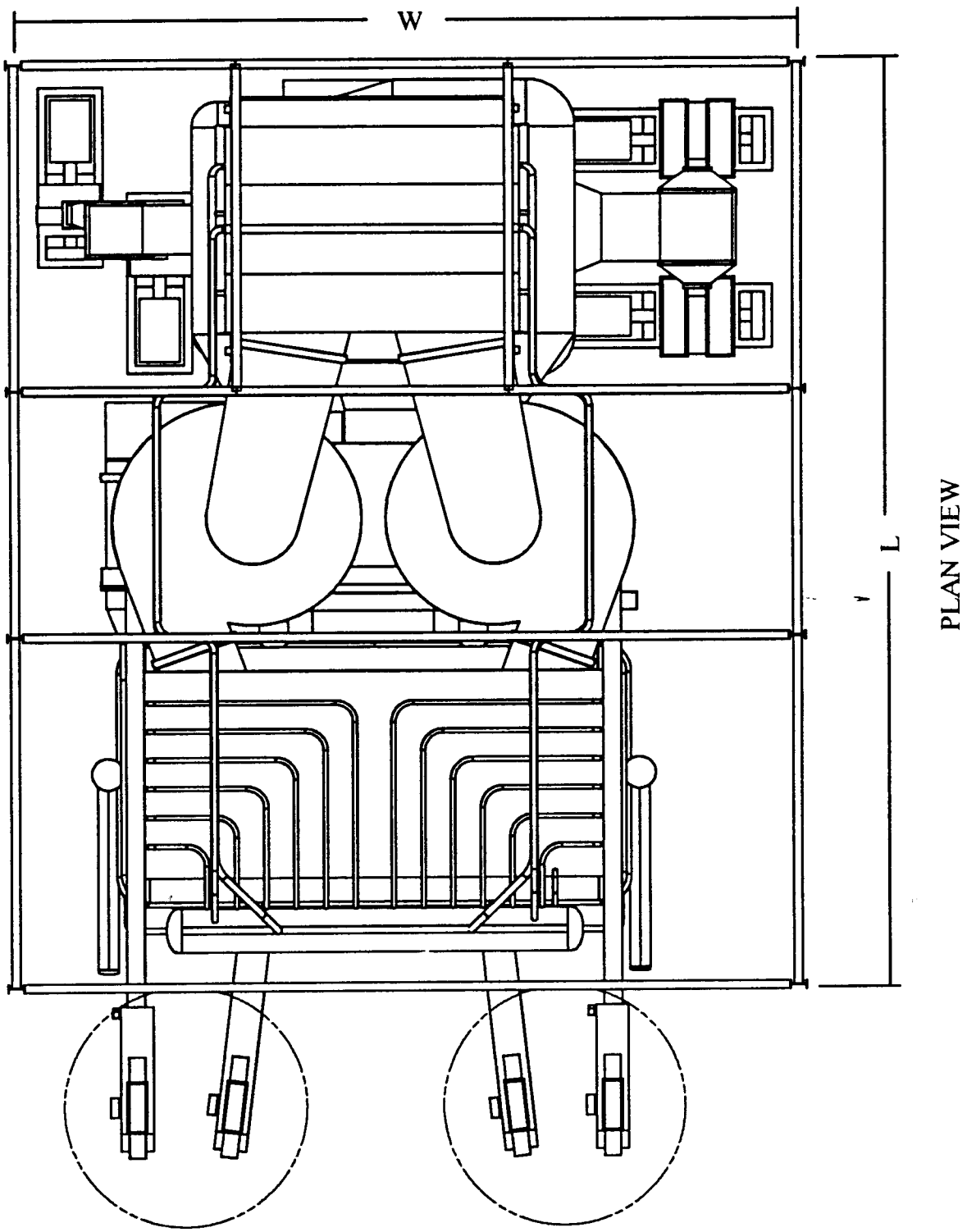

AHLSTROM PYROPOWER	TITLE RADIAN CORP./NREL/NORTHEAST		PROPOSAL NO. B91-95
	276,000 LB/HR -1500 PSIG -950° F		DRAWING NO. B9195-A02
	DRAWN by: SJC	APPROVED by: RB	DATE 11/05/91	PAGE 2 of 2

H = 124 ft

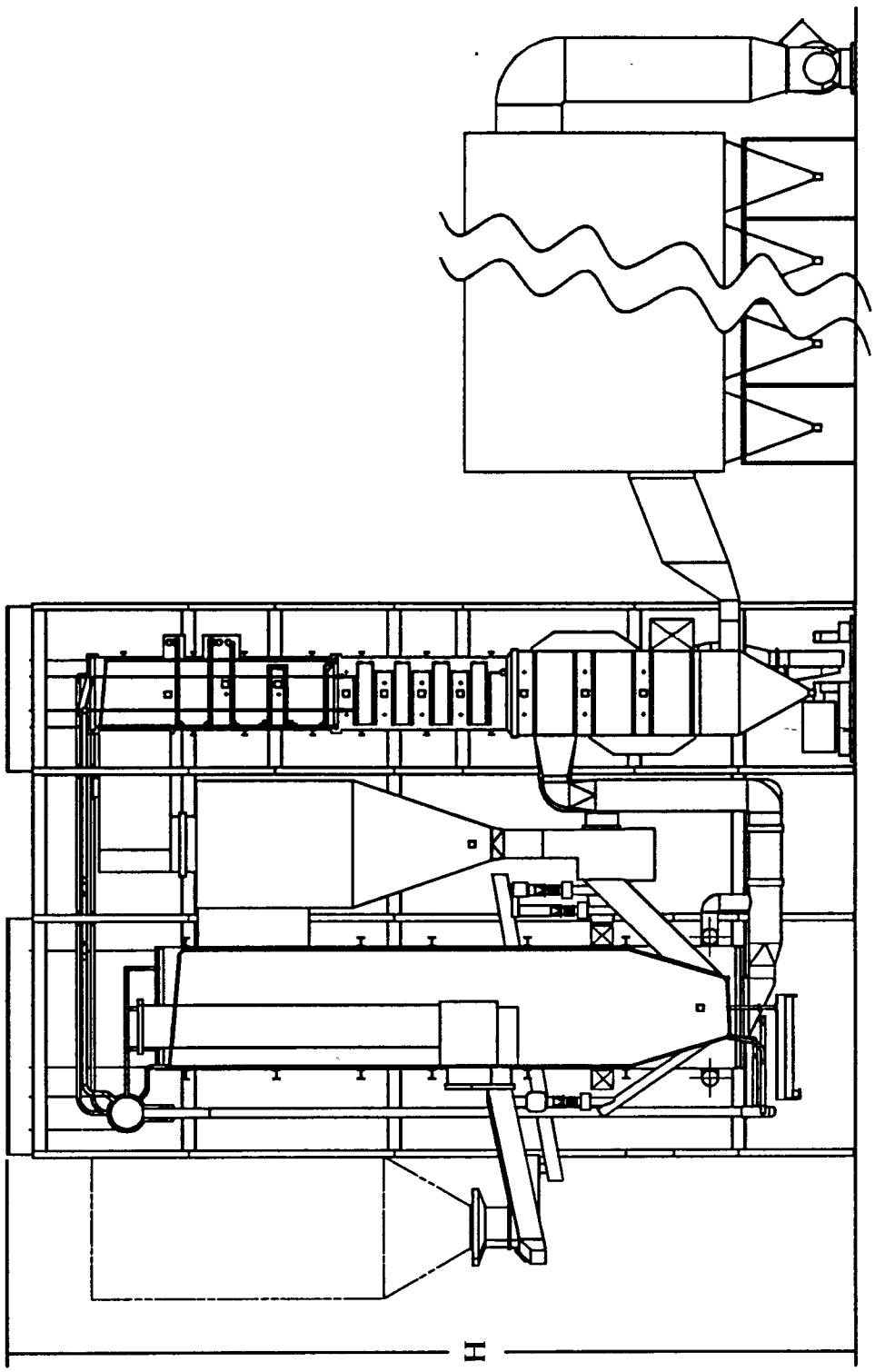

ELEVATION VIEW

1. DESIGN CONDITIONS

1.1 Site Data

Plant Elevation, Ft.	1200.
Ambient Air Pressure, Psia	14.1
Ambient Air Temperature, F.	80.
Relative Humidity, %	60.
Moisture, Lb/Lb of Dry Air	0.013

1.2 Steam Conditions

Load Condition	100.0%
Flow, Lb/Hr	241000.
Pressure, Psig	1500.
Temperature, F.	950.
Feedwater Temp., F.	335.

1.3 Fuel Analysis

WET BASIS	Biomass
Carbon	34.84
Hydrogen	3.63
Sulfur	0.08
Nitrogen	1.84
Oxygen	9.48
Ash	15.81
Moisture	34.32
HHV, Btu/Lb	4163.

DRY BASIS	Biomass
Carbon	53.05
Hydrogen	5.53
Sulfur	0.12
Nitrogen	2.80
Oxygen	14.43
Ash	24.07
HHV, Btu/Lb	6338.

1.4 Limestone Analysis

	WT. PERCENT
CaCO3	90.00
MgCO3	4.50
Inert	4.50
Water	1.00

1.5 Ash Analysis

(Wt. Percent)	100.0%
Calcium Oxide	0.00
Magnesium Oxide	0.00
Calcium Sulfate	0.00
Magnesium Sulfate	0.00
Limestone Inert	0.00
Fuel Ash	98.22
Unburned Fuel	1.78

2. PERFORMANCE DATA

2.1 Performance Data

1) Load Condition	100.0%
2) Type of Fuel (By Weight)	
Biomass %	100.
3) Main Steam, KLb/Hr	241.
4) Excess Air, %	20.
5) Calcium to Sulfur Ratio	0.0:1
6) Fuel Heat Input, MMBtu/Hr	388.
7) Bottom Ash/Fly Ash Split	50./50.
8) Quantity, Lb/Hr	
1. Fuel	93090.
2. Limestone	0.
3. Air (x1000)	545.
4. Gas (x1000)	623.
5. Ash (Total)	14985.
9) Pressure, Psig	
1. Ecomomizer Inlet	1700.
2. Drum	1640.
3. Superheater Outlet	1500.
10) Steam/Water Temperatures, F.	
1. Entering Economizer	335.
2. Drum	609.
3. Superheater Outlet	950.
11) Air Temperatures, F.	
1. Entering Fans	80.
2. Leaving Fans (Avg.)	100.
12) Exit Gas Temp., F.	300.
13) Efficiency Losses, %	
1. Dry Flue Gas	6.86
2. Moisture in Fuel	9.27
3. Moisture from Hydrogen	8.76
4. Unburned Carbon	1.00
5. Radiation	0.35
6. Unmeasured Losses	1.99
SUM OF LOSSES	28.24
BOILER EFFICIENCY	71.76
14) Fan Operating Horsepower	
1. Primary Air Fan	1050.
2. Secondary Air Fan	325.
3. High Pres. Blower	166.
4. Induced Draft Fan	1008.

3. EMISSIONS

3.1 Emissions

1) SO2	
Lb/Hr	148.78
Ppm d.v.	128.
Lb/MMBtu	0.384
Percent Retention	0.0
2) NOx	
Lb/Hr	155.01
Ppm d.v.	186.
Lb/MMBtu	0.400
3) CO	
Lb/Hr	58.13
Ppm d.v.	114.
Lb/MMBtu	0.150
4) VOC	
Lb/Hr	9.69
Ppm d.v.	33.
Lb/MMBtu	0.025
5) Particulate Matter	
Lb/Hr	11.63
Lb/MMBtu	0.030
*Gr/Acf	0.006

* Pressure = 14.1 Psia & 300. F.

AHLSTROM PYROPOWER	TITLE RADIAN CORP./NREL/GREAT PLAINS		PROPOSAL NO. B91-95
	241,000 LB/HR -1500 PSIG -950° F		DRAWING NO. B9195-A01
	DRAWN by: RB	APPROVED by: RB	DATE 11/05/91	PAGE 1 of 2

L = 90 ft

W = 50 ft

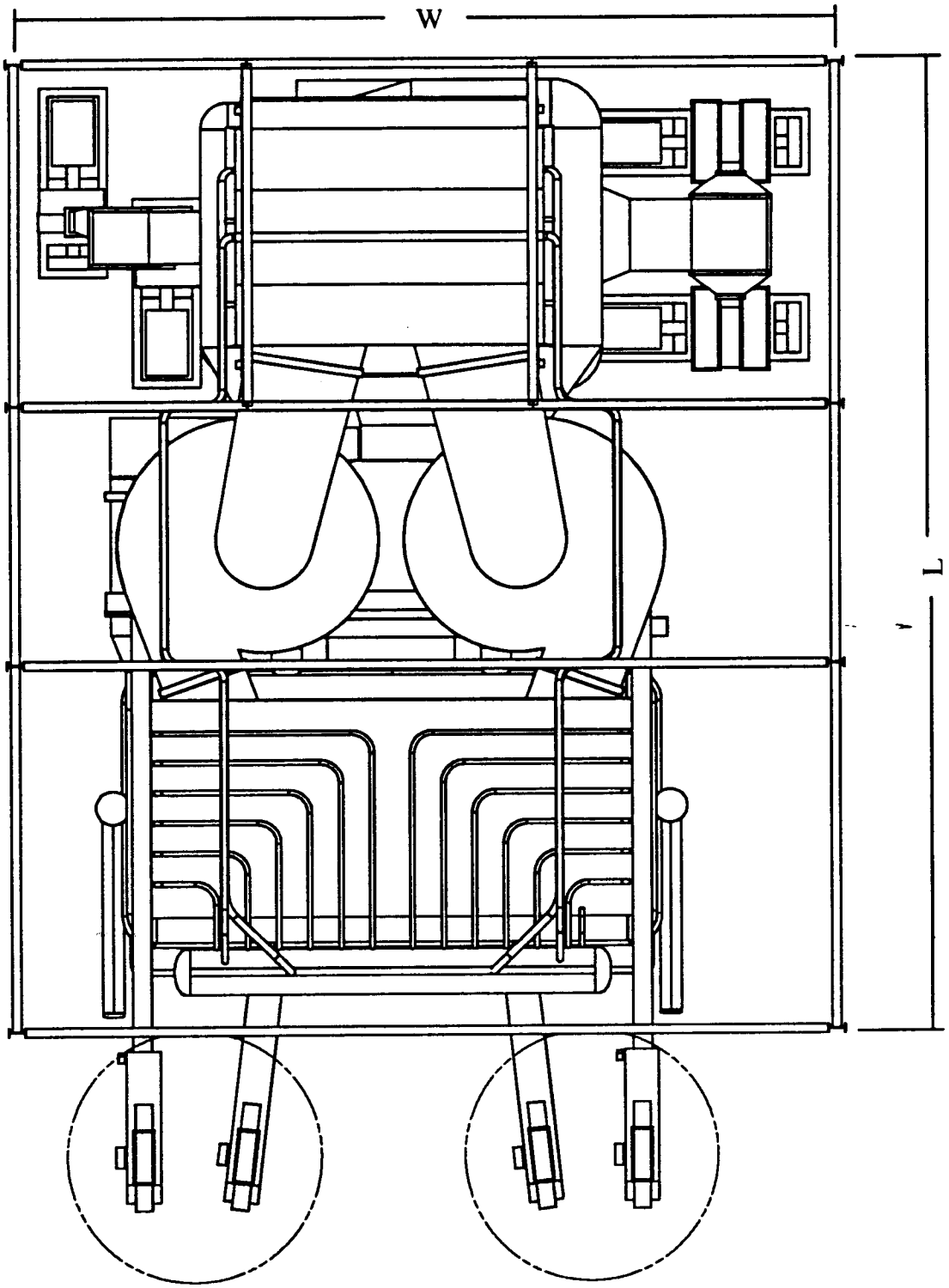

AHLSTROM PYROPOWER	TITLE RADIAN CORP./NREL/GREAT PLAINS		PROPOSAL NO. B91-95
	241,000 LB/HR -1500 PSIG -950° F		DRAWING NO. B9195-A02
	DRAWN by: SJC	APPROVED by: RB	DATE 11/05/91	PAGE 2 of 2

H = 121 ft

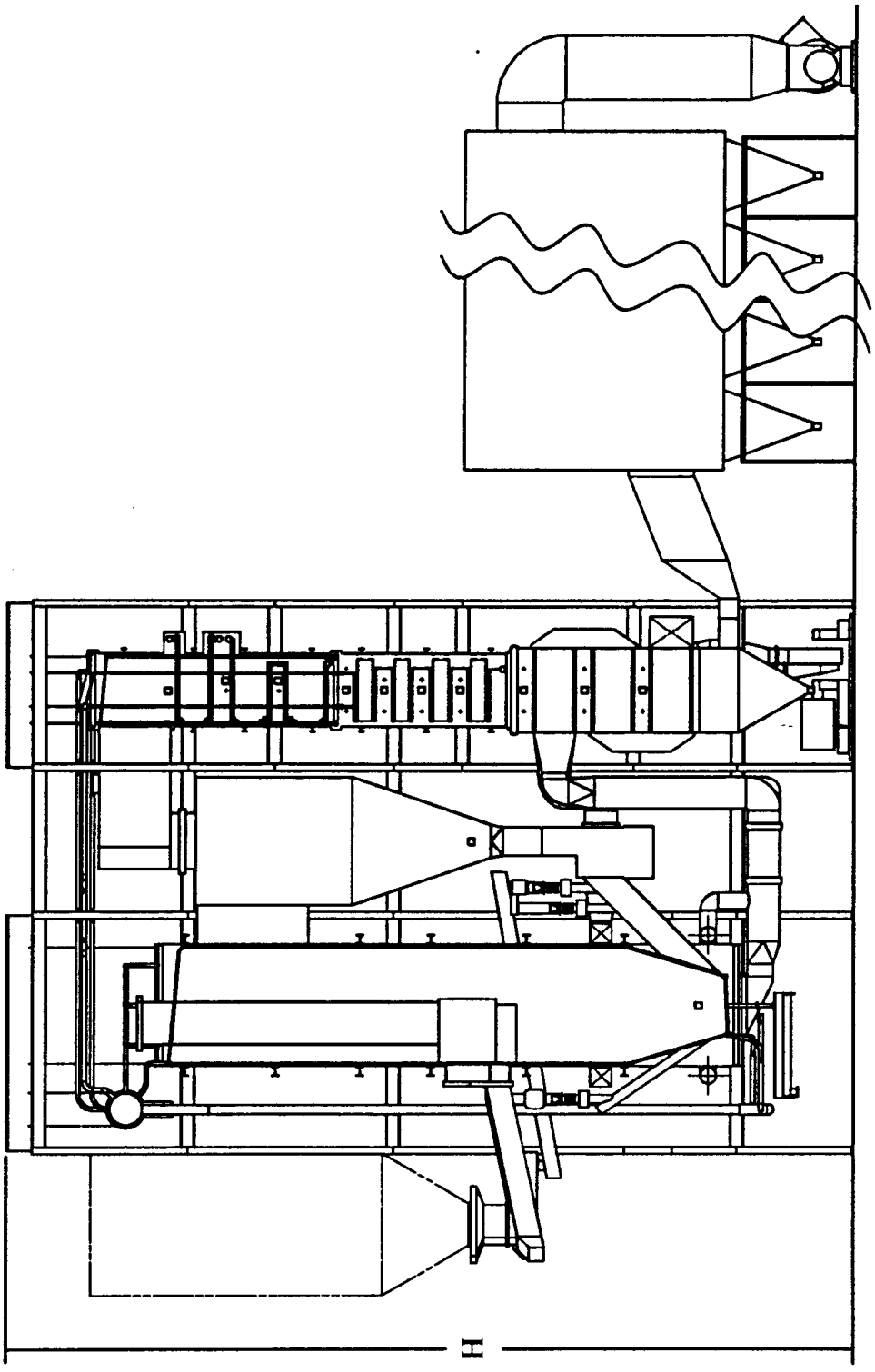

ELEVATION VIEW

1. DESIGN CONDITIONS

1.1 Site Data

Plant Elevation, Ft.	596.
Ambient Air Pressure, Psia	14.4
Ambient Air Temperature, F.	80.
Relative Humidity, %	60.
Moisture, Lb/Lb of Dry Air	0.013

1.2 Steam Conditions

Load Condition	100.0%
Flow, Lb/Hr	213000.
Pressure, Psig	1500.
Temperature, F.	950.
Feedwater Temp., F.	335.

1.3 Fuel Analysis

WET BASIS	Biomass
Carbon	27.31
Hydrogen	2.67
Sulfur	0.05
Nitrogen	1.22
Oxygen	7.73
Ash	25.99
Moisture	35.03
HHV, Btu/Lb	3158.

DRY BASIS	Biomass
Carbon	42.03
Hydrogen	4.11
Sulfur	0.08
Nitrogen	1.88
Oxygen	11.90
Ash	40.00
HHV, Btu/Lb	4861.

1.4 Limestone Analysis

	WT. PERCENT
CaCO3	90.00
MgCO3	4.50
Inert	4.50
Water	1.00

1.5 Ash Analysis

(Wt. Percent)	100.0%
Calcium Oxide	0.00
Magnesium Oxide	0.00
Calcium Sulfate	0.00
Magnesium Sulfate	0.00
Limestone Inert	0.00
Fuel Ash	99.17
Unburned Fuel	0.83

APPENDIX D

Biomass-to-Ethanol Steam Cycle Basis

CASE 6

Boiler Feed Water, lb/hr 215,152

BFW Chemical Usage	lb/hr	lb/yr
Disodium Phosphate	0.11	895.2
Neutralizing Amine	0.32	2,685.7
Hydrazine	1.08	8,952.5

2. PERFORMANCE DATA

2.1 Performance Data

1)	Load Condition	100.0%
2)	Type of Fuel (By Weight)	
	Biomass %	100.
3)	Main Steam, KLb/Hr	213.
4)	Excess Air, %	20.
5)	Calcium to Sulfur Ratio	0.0:1
6)	Fuel Heat Input, MMBtu/Hr	363.
7)	Bottom Ash/Fly Ash Split	50./50.
8)	Quantity, Lb/Hr	
	1. Fuel	114877.
	2. Limestone	0.
	3. Air (x1000)	517.
	4. Gas (x1000)	602.
	5. Ash (Total)	30107.
9)	Pressure, Psig	
	1. Ecomomizer Inlet	1700.
	2. Drum	1640.
	3. Superheater Outlet	1500.
10)	Steam/Water Temperatures, F.	
	1. Entering Economizer	335.
	2. Drum	609.
	3. Superheater Outlet	950.
11)	Air Temperatures, F.	
	1. Entering Fans	80.
	2. Leaving Fans (Avg.)	100.
12)	Exit Gas Temp., F.	300.
13)	Efficiency Losses, %	
	1. Dry Flue Gas	6.98
	2. Moisture in Fuel	12.48
	3. Moisture from Hydrogen	8.50
	4. Unburned Carbon	1.00
	5. Radiation	0.35
	6. Unmeasured Losses	2.94
	SUM OF LOSSES	32.25
	BOILER EFFICIENCY	67.75
14)	Fan Operating Horsepower	
	1. Primary Air Fan	976.
	2. Secondary Air Fan	299.
	3. High Pres. Blower	154.
	4. Induced Draft Fan	959.

3. EMISSIONS

3.1 Emissions

1) SO2	
Lb/Hr	114.75
Ppm d.v.	104.
Lb/MMBtu	0.316
Percent Retention	0.0
2) NOx	
Lb/Hr	145.11
Ppm d.v.	183.
Lb/MMBtu	0.400
3) CO	
Lb/Hr	54.42
Ppm d.v.	113.
Lb/MMBtu	0.150
4) VOC	
Lb/Hr	9.07
Ppm d.v.	33.
Lb/MMBtu	0.025
5) Particulate Matter	
Lb/Hr	10.88
Lb/MMBtu	0.030
*Gr/Acf	0.006

* Pressure = 14.4 Psia & 300. F.

AHLSTROM PYROPOWER	TITLE RADIAN CORP./NREL/CHICAGO - MSW		PROPOSAL NO. B91-95
	213,000 LB/HR -1500 PSIG -950° F		DRAWING NO. B9195-A01
	DRAWN by: RB	APPROVED by: RB	DATE 11/05/91	PAGE 1 of 2

L = 88 ft

W = 48 ft

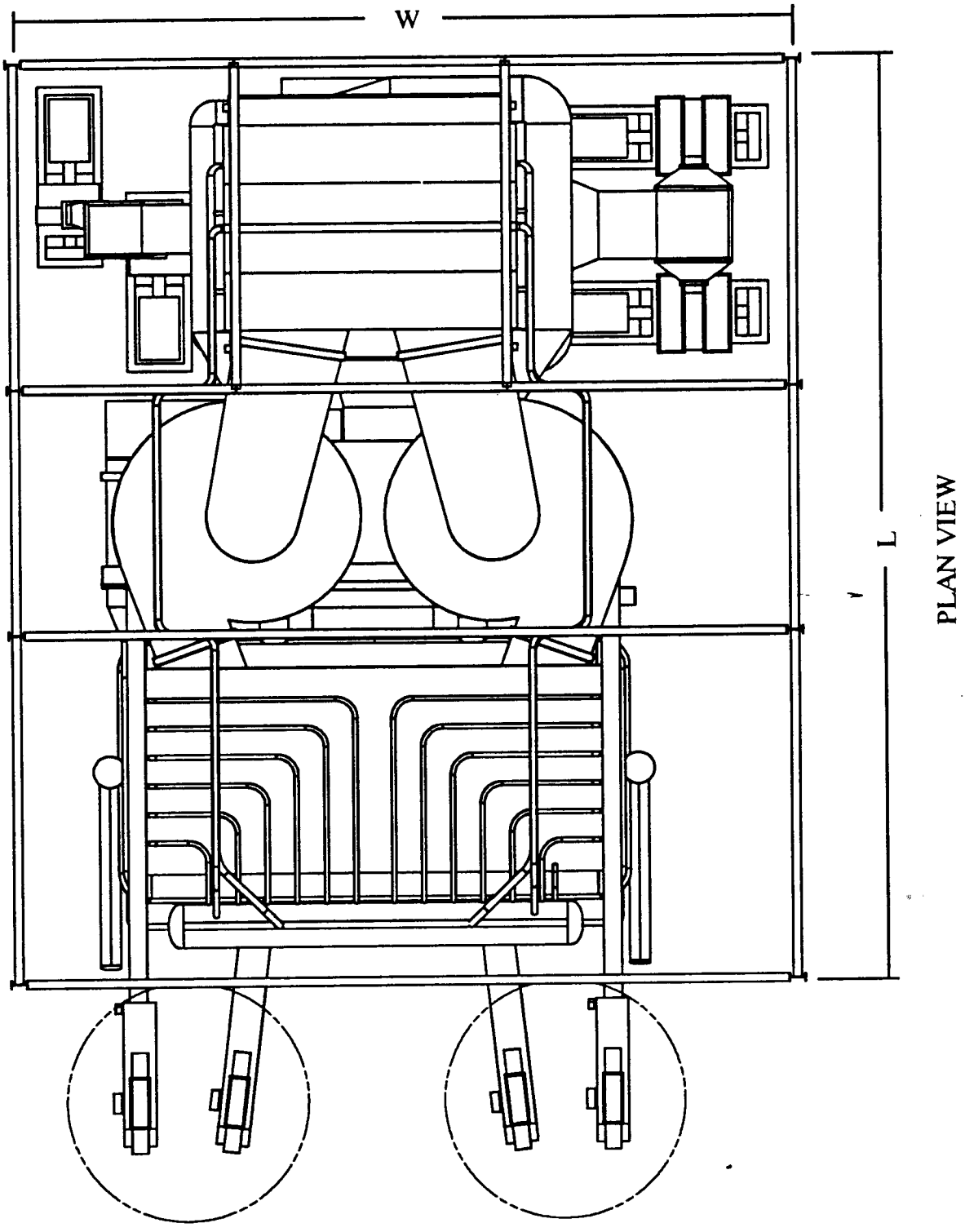

AHLSTROM PYROPOWER	TITLE RADIAN CORP./NREL/CHICAGO – MSW	PROPOSAL NO. B91-95
	213,000 LB/HR -1500 PSIG -950° F	DRAWING NO. B9195-A02
	DRAWN by: SJC / APPROVED by: RB / DATE 11/05/91	PAGE 2 of 2

H = 120 ft

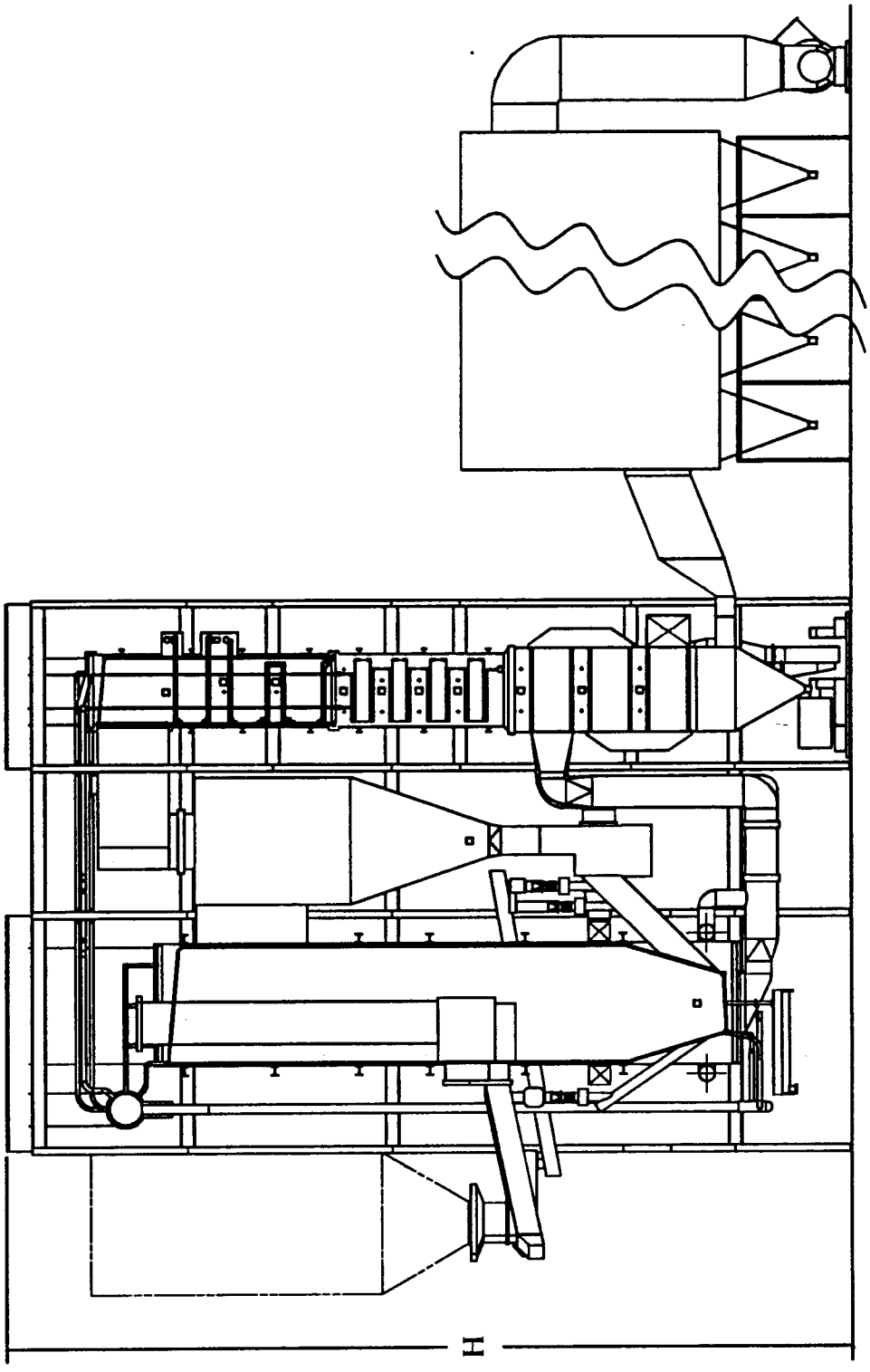

ELEVATION VIEW

APPENDIX B

Turbogenerator Performance Summary

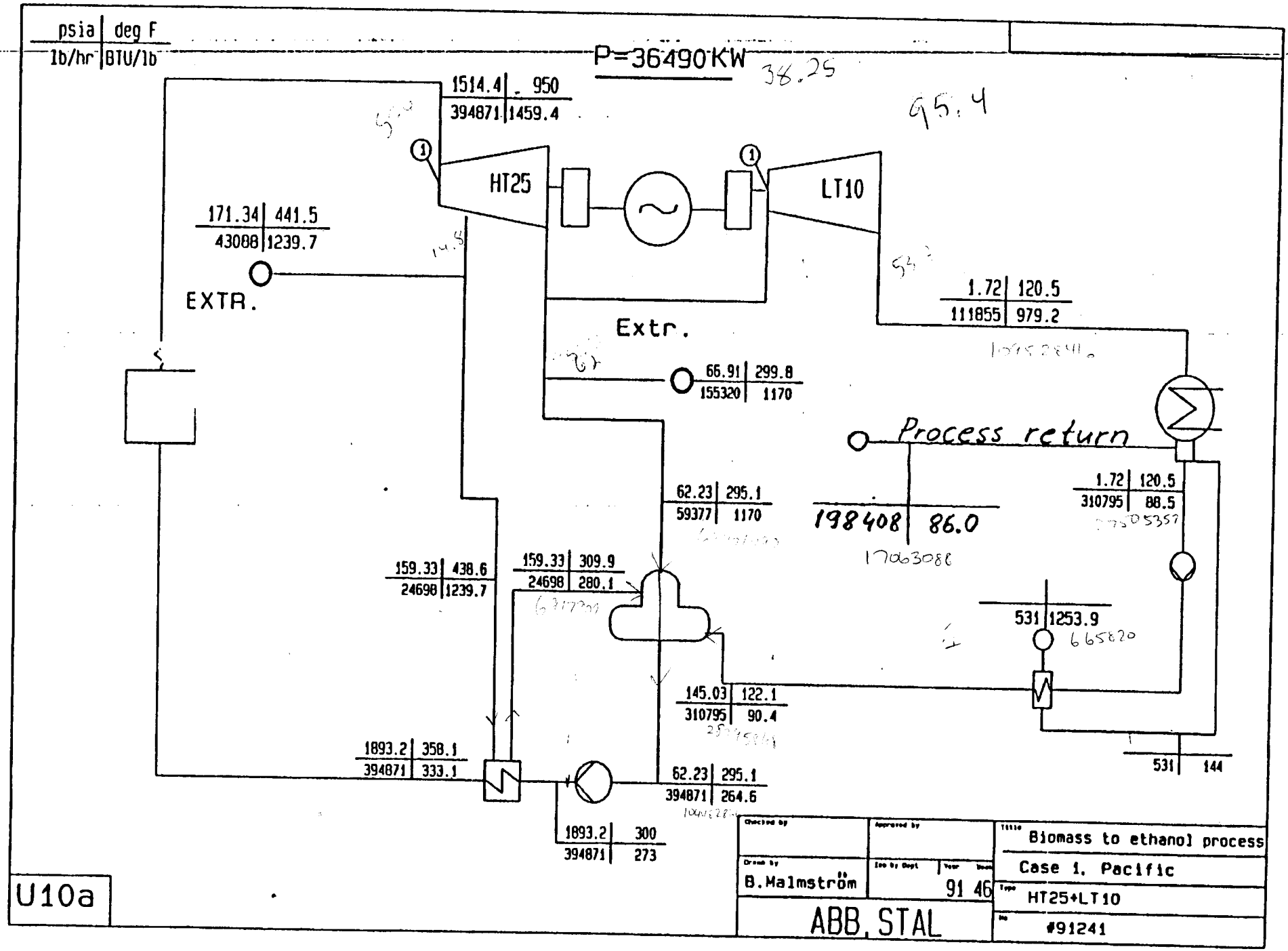
psia | deg F
lb/hr | BTU/lb
P=36490KW
38.25
95.4
1514.4 | 950
394871 | 1459.4
HT25
LT10
171.34 | 441.5
43088 | 1239.7
EXTR.
Extr.
66.91 | 299.8
155320 | 1170
1.72 | 120.5
111855 | 979.2
Process return
198408 | 86.0
1.72 | 120.5
310795 | 88.5
62.23 | 295.1
59377 | 1170
159.33 | 438.6
24698 | 1239.7
159.33 | 309.9
24698 | 280.1
531 | 1253.9
665820
145.03 | 122.1
310795 | 90.4
1893.2 | 358.1
394871 | 333.1
62.23 | 295.1
394871 | 264.6
531 | 144
1893.2 | 300
394871 | 273
U10a
Checked by
Approved by
Drawn by
B.Malmström
Issued by Dept
91 46
ABB, STAL
Title
Biomass to ethanol process
Case 1, Pacific
Type
HT25+LT10
No
#91241

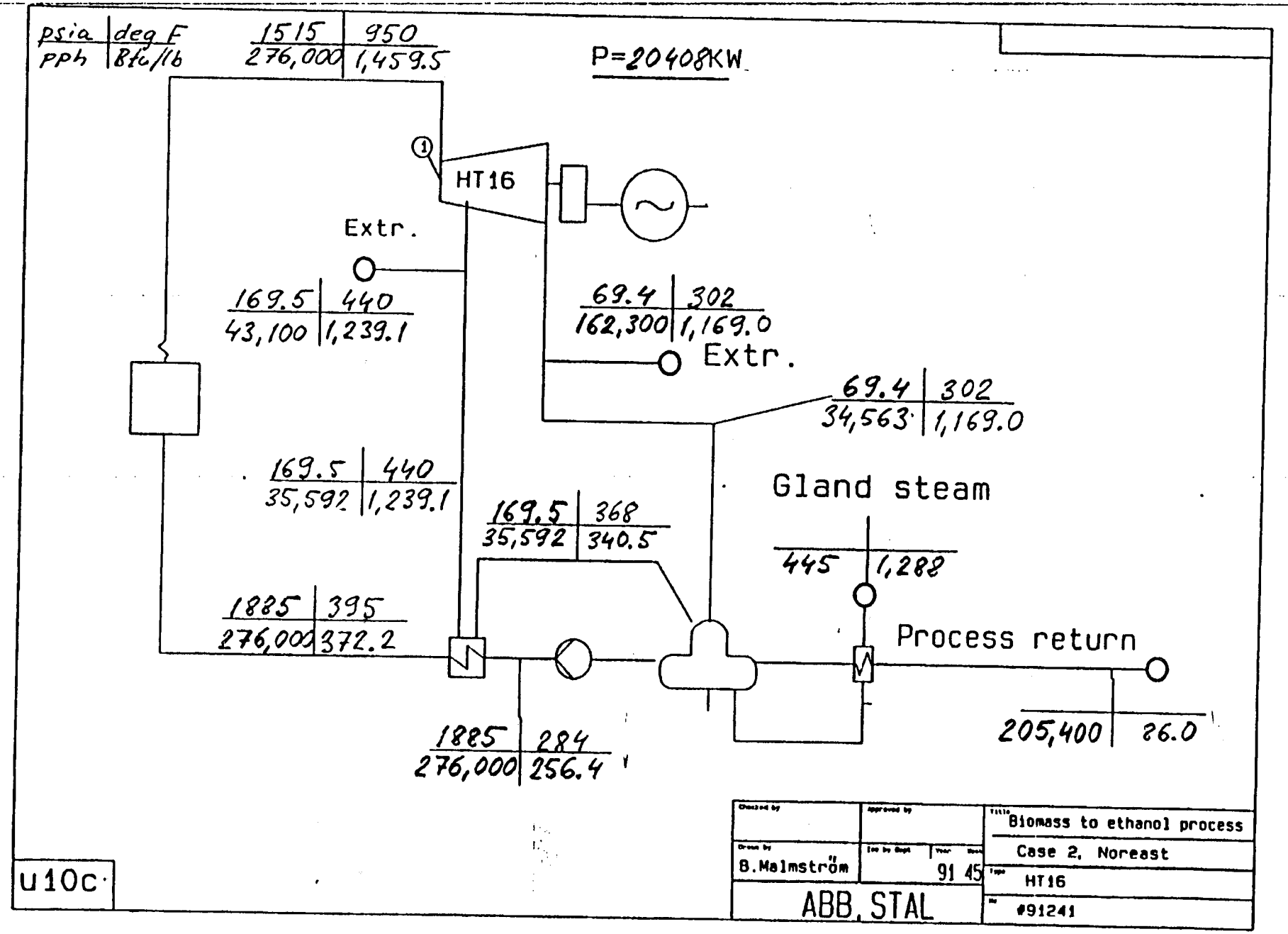
psia | deg F
pph | Btu/lb
1515 | 950
276,000 | 1,459.5
P=20408KW
HT16
Extr.
169.5 | 440
43,100 | 1,239.1
69.4 | 302
162,300 | 1,169.0
Extr.
69.4 | 302
34,563 | 1,169.0
169.5 | 440
35,592 | 1,239.1
169.5 | 368
35,592 | 340.5
Gland steam
445 | 1,288
1885 | 395
276,000 | 372.2
Process return
1885 | 284
276,000 | 256.4
205,400 | 86.0
u10c
Checked by
Approved by
Drawn by
B.Malmström
Date by Dept
91 45
ABB, STAL
Title
Biomass to ethanol process
Case 2, Noreast
Type
HT16
No
#91241

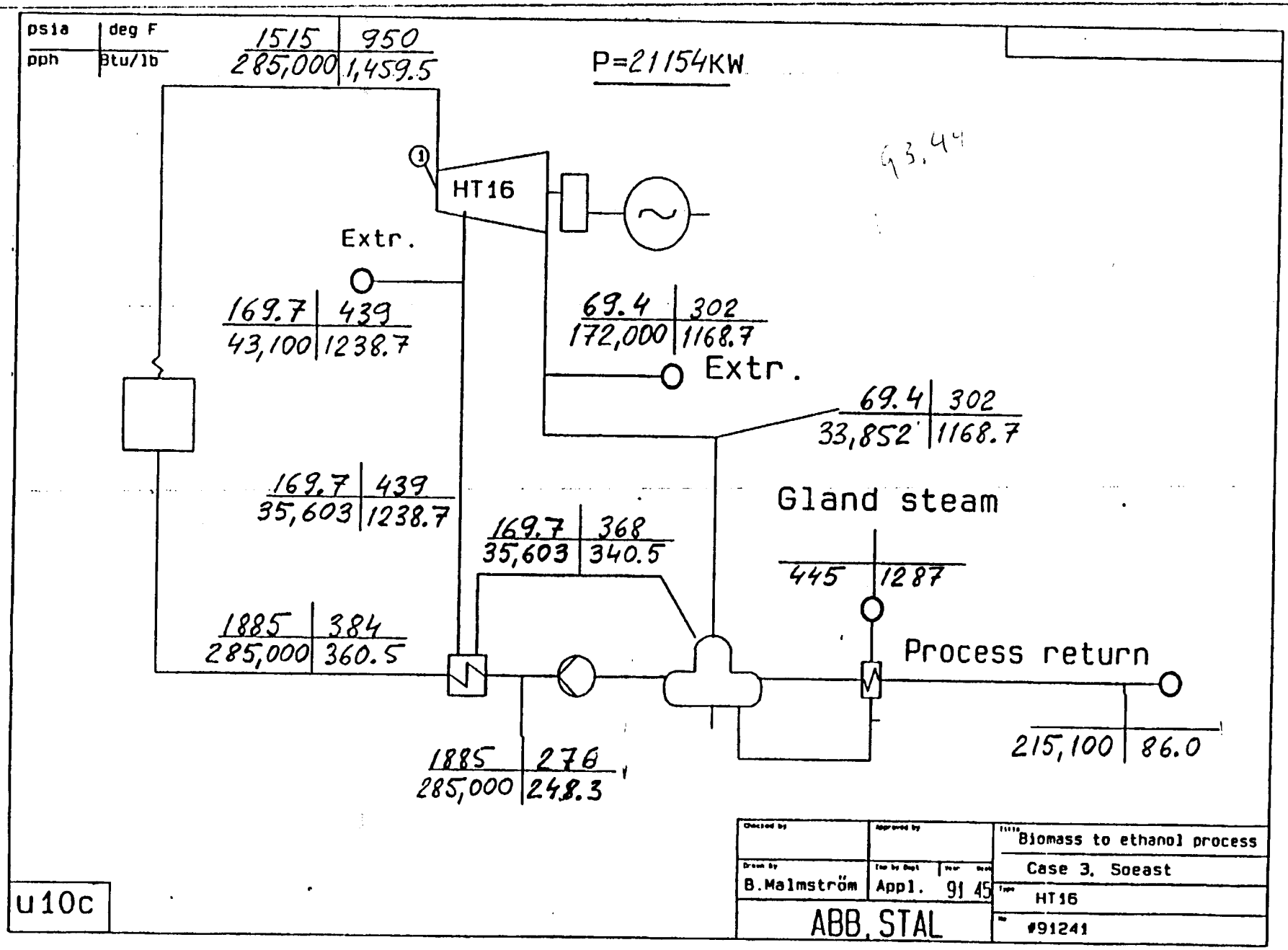
psia | deg F
pph | Btu/lb
1515 | 950
285,000 | 1,459.5
P=21154KW
93.44
HT16
Extr.
169.7 | 439
43,100 | 1238.7
69.4 | 302
172,000 | 1168.7
Extr.
69.4 | 302
33,852 | 1168.7
169.7 | 439
35,603 | 1238.7
Gland steam
169.7 | 368
35,603 | 340.5
445 | 1287
1885 | 384
285,000 | 360.5
Process return
215,100 | 86.0
1885 | 276
285,000 | 248.3
u10c
Checked by
Approved by
Drawn by
B.Malmström
Appl.
91 45
ABB, STAL
Biomass to ethanol process
Case 3, Soeast
HT16
#91241

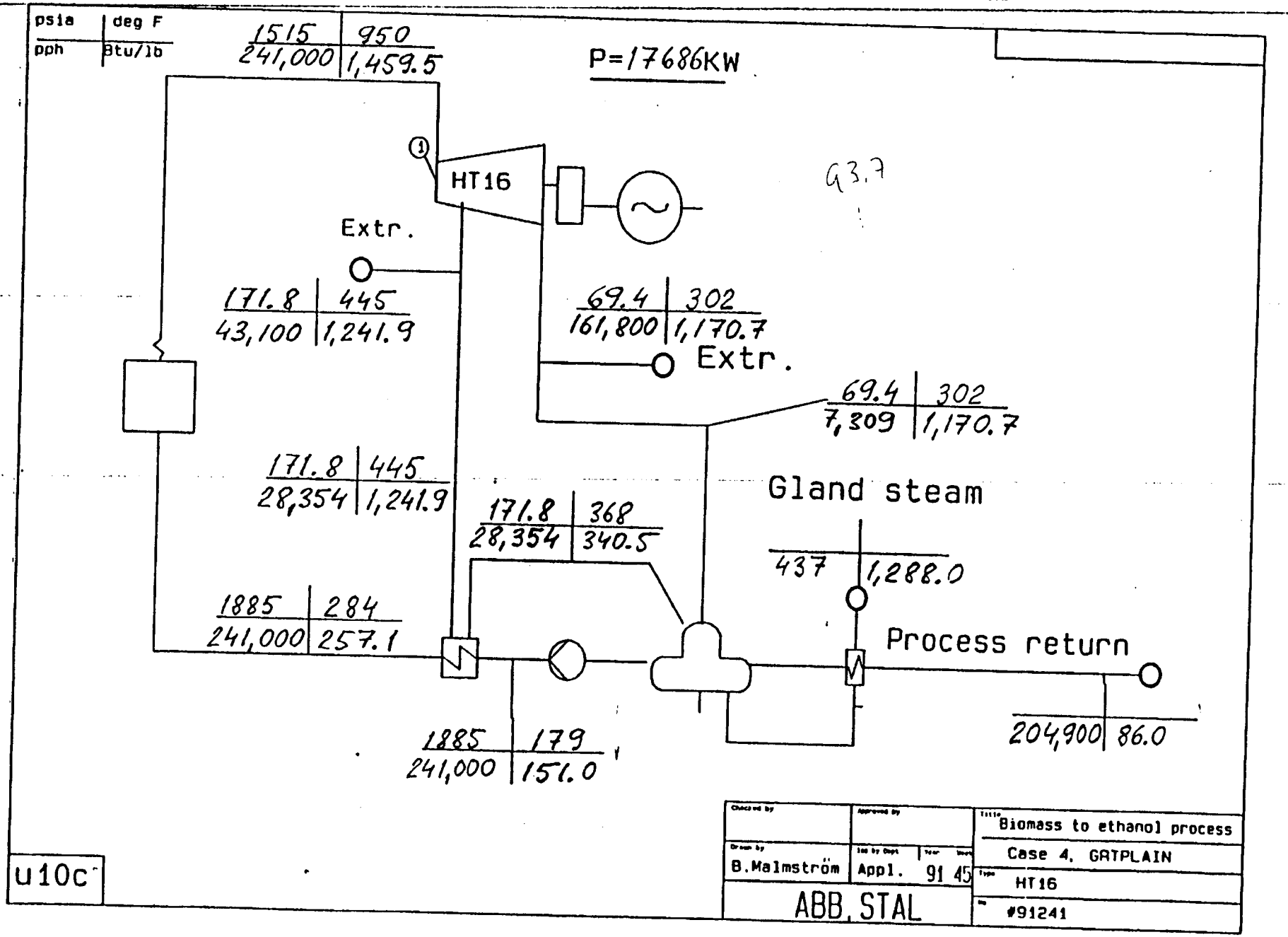
psia | deg F
pph | Btu/lb
1515 | 950
241,000 | 1,459.5
P=17686KW
HT16
Extr.
171.8 | 445
43,100 | 1,241.9
69.4 | 302
161,800 | 1,170.7
Extr.
69.4 | 302
7,309 | 1,170.7
171.8 | 445
28,354 | 1,241.9
171.8 | 368
28,354 | 340.5
Gland steam
437 | 1,288.0
1885 | 284
241,000 | 257.1
Process return
1885 | 179
241,000 | 151.0
204,900 | 86.0
u10c
Drawn by
B.Malmström
Appl. 91 45
ABB STAL
Title
Biomass to ethanol process
Case 4. GATPLAIN
Type
HT16
No
#91241

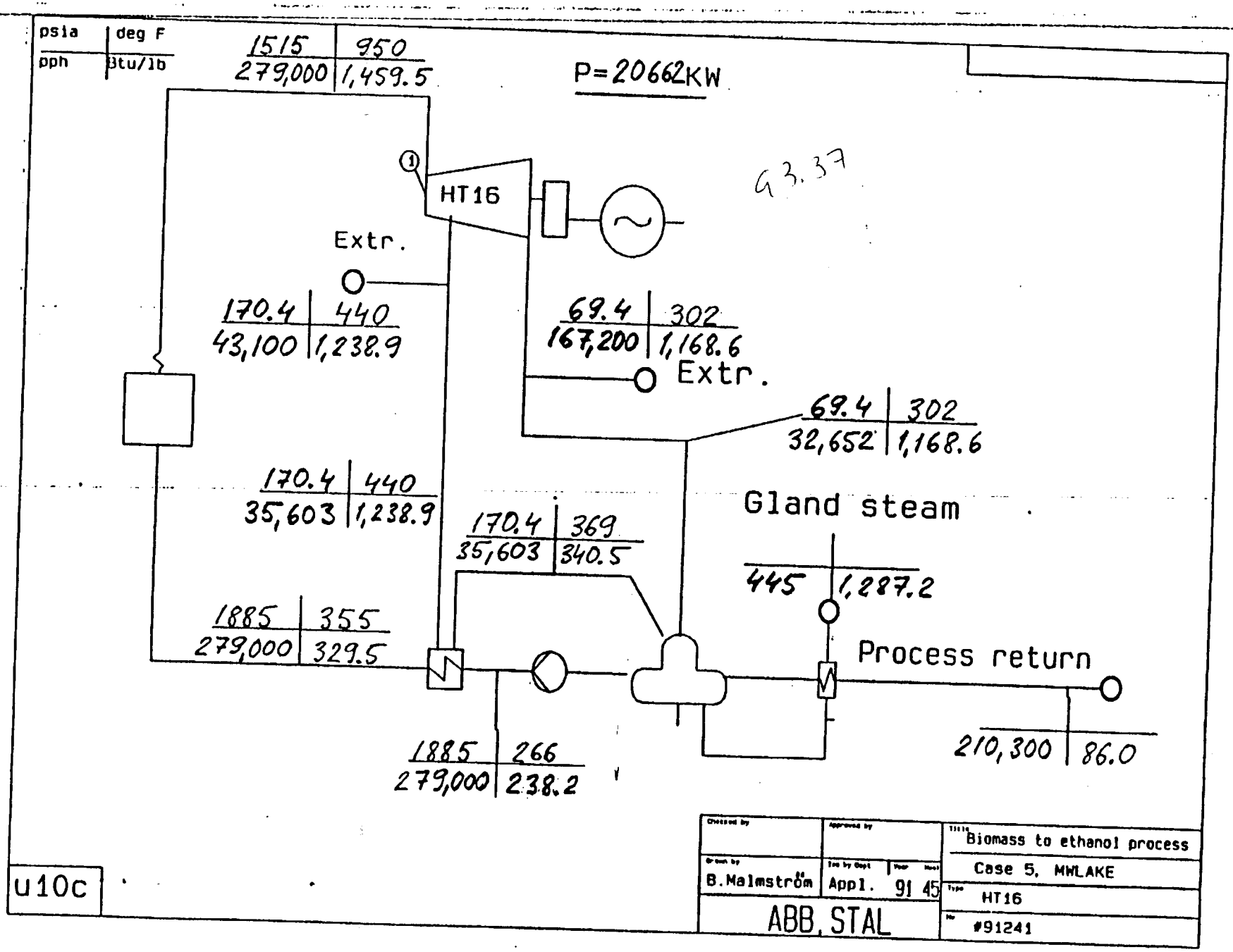
psia | deg F
pph | Btu/lb
1515 | 950
279,000 | 1,459.5
P=20662KW
93.37
HT16
Extr.
170.4 | 440
43,100 | 1,238.9
69.4 | 302
167,200 | 1,168.6
Extr.
69.4 | 302
32,652 | 1,168.6
170.4 | 440
35,603 | 1,238.9
Gland steam
170.4 | 369
35,603 | 340.5
445 | 1,287.2
1885 | 355
279,000 | 329.5
Process return
1885 | 266
279,000 | 238.2
210,300 | 86.0
u10c
Biomass to ethanol process
Case 5, MWLAKE
B.Malmström
Appl.
91 45
HT16
ABB, STAL
#91241

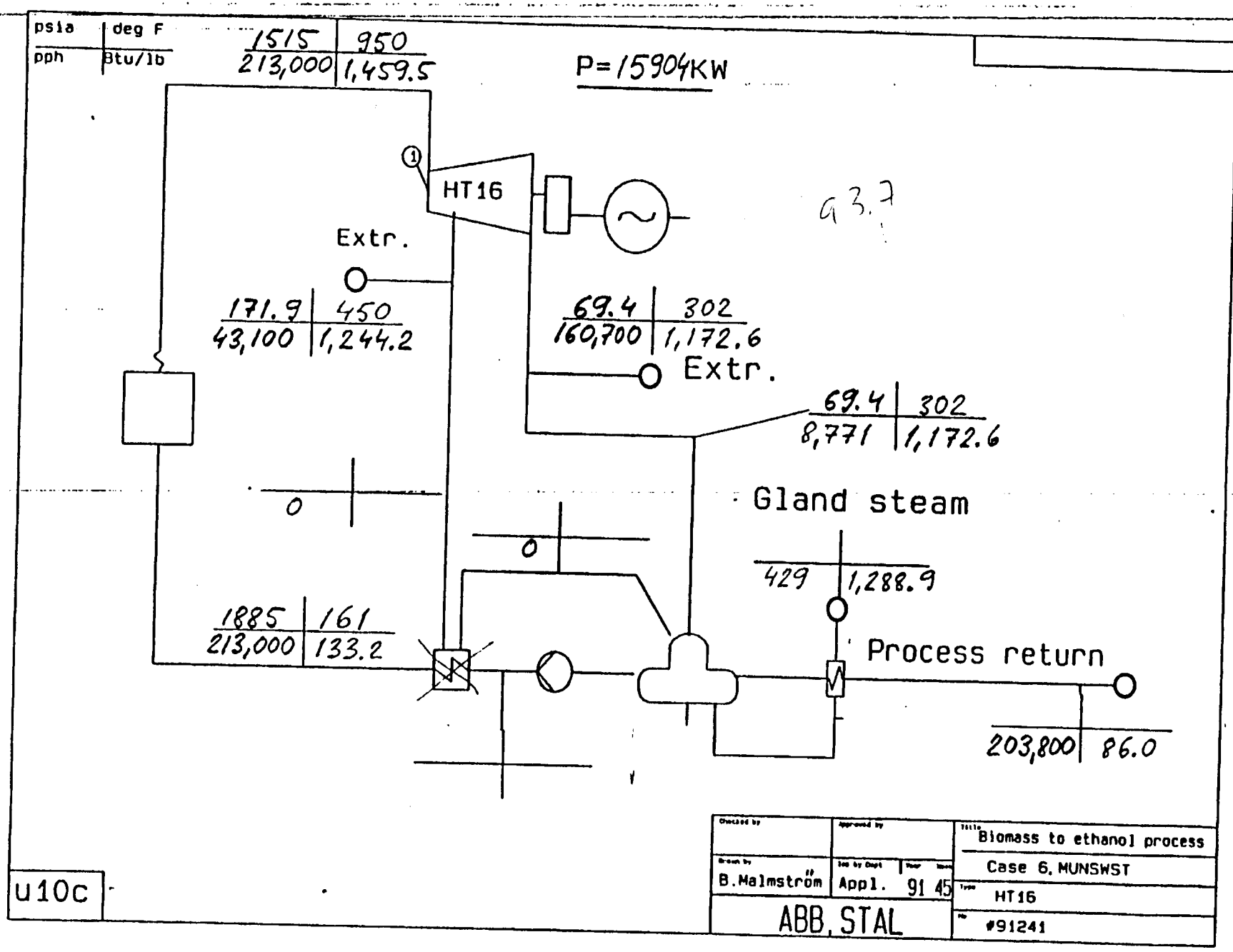
psia | deg F
pph | Btu/lb
1515 | 950
213,000 | 1,459.5
P=15904KW
HT16
Extr.
171.9 | 450
43,100 | 1,244.2
69.4 | 302
160,700 | 1,172.6
Extr.
69.4 | 302
8,771 | 1,172.6
Gland steam
0
0
429 | 1,288.9
1885 | 161
213,000 | 133.2
Process return
203,800 | 86.0
u10c
Checked by
Approved by
Title
Biomass to ethanol process
Case 6, MUNSWST
Drawn by
B.Malmström
Dep by Dept
Appl.
Year
91
Week
45
Type
HT16
ABB, STAL
No
#91241

APPENDIX C

Cost Analysis Summary

TABLE 1. CAPITAL EXPENSES - FLUIDIZED BED BOILER
CASE 1

ITEMIZED EXPENDITURES		COST IN 1991 DOLLARS
DIRECT COSTS		
PURCHASED EQUIPMENT		
All Equipment		$33,760,000
Taxes and Freight	0.08 (TCC)	2,700,800
Total Equipment Costs (TEC)		$36,460,800
INSTALLATION		
Foundation and supports	0.08 (TEC)	2,916,860
Handling and erection	0.14 (TEC)	5,104,510
Electrical	0.04 (TEC)	1,458,430
Insulation	0.01 (TEC)	364,610
Piping	0.02 (TEC)	729,220
Painting	0.01 (TEC)	364,610
Total Installation Costs		$10,938,200
INDIRECT COSTS		
Engineering/Supervision	0.10 (TEC)	3,646,080
Construction/Field Cost	0.05 (TEC)	1,823,040
Contractor Fees	0.10 (TEC)	3,646,080
Start-up	0.01 (TEC)	364,610
Performance test		200,000
Contingencies	0.03 (TEC)	1,093,820
Total Indirect Costs		$10,773,600
TOTAL INSTALLED COSTS (TIC)		$58,172,600

*Represents the cost of all the equipment in the system, including instruments and controls.

11/22/91

TABLE 2. ANNUAL OPERATING COSTS - FLUIDIZED BED BOILER
CASE 1

ITEMIZED EXPENDITURES	Rate			COST IN 1991 DOLLARS
Labor				
Operating	hourly rate	$12.50	336 hr/wk	$218,400
Maintenance	hourly rate	$12.50	28 hr/wk	18,200
Supervisory	hourly rate	$12.50	28 hr/wk	18,200
Maintenance materials	0.07 (TEC)			2,552,260
Utility Credits				
Electricity	kwhr rate	$0.05		(13,995,110)
Steam	$/1000lb	$3.00		(4,955,750)
Utility Costs				
Make-up Water Treat	$/1000lb	$0.24		$404,430
BFW Treatment	$/klb Steam	$0.01		$32,870
Ash Disposal	$/ton	$53.00		$1,822,930
Total Direct Costs				($13,883,600)
INDIRECT COSTS				
Capital recovery	CRF =	0.1315		$7,648,170
Overhead	0.6	(Labor)		1,684,240
G&A/insurance/taxes	0.04	(TIC)		2,326,900
Total Indirect Costs				$11,659,300
TOTAL ANNUAL OPERATING COSTS				($2,224,300)

TABLE 3. REFERENCE TABLE FOR FLUIDIZED BED BOILER ESTIMATING
CASE 1

System Data Fluidized Bed Boiler		
TIC		$58,172,600
ELECTRICITY PRODUCTION, KW-HR	33,634	
HIGH PRESSURE STEAM PRODUCTION, LB/HR	395,000	
LOW PRESSURE STEAM, LB/HR	198,500	
MAKE-UP WATER, LB/HR	202,490	
FUEL		
LHV Nat Gas (Btu/scf)	909	
MM Btu/hr	0.00	
ASH, LB/HR	8,266	
ECONOMIC DATA		
CRF-sys	0.1315	
Interest Rate	10%	
Equipment Life	15	
Fuel Cost ($/MM Btu)		$2.50
Cost of Electricity ($/kw-hr)		$0.05
Cost of Steam ($/1000lb)		$3.00
Cost of Make-up Water Treatment ($/1000lb)		$0.24
Cost of BFW Treatment ($/1000lb of Steam)		$0.01
Cost of Ash Disposal ($/ton)		$53.00
OPERATING DATA		
Annual Hours	8760	
Capacity Factor	0.95	

CASE 1

Boiler Feed Water, lb/hr 398,990

BFW Chemical Usage	lb/hr	lb/yr
Disodium Phosphate	0.20	1,660.2
Neutralizing Amine	0.60	4,980.6
Hydrazine	1.99	16,602.0

TABLE 1. CAPITAL EXPENSES - FLUIDIZED BED BOILER
CASE 1A

ITEMIZED EXPENDITURES		COST IN 1991 DOLLARS
DIRECT COSTS		
PURCHASED EQUIPMENT		
All Equipment		$33,160,000
Taxes and Freight	0.08 (TCC)	2,652,800
Total Equipment Costs (TEC)		$35,812,800
INSTALLATION		
Foundation and supports	0.08 (TEC)	2,865,020
Handling and erection	0.14 (TEC)	5,013,790
Electrical	0.04 (TEC)	1,432,510
Insulation	0.01 (TEC)	358,130
Piping	0.02 (TEC)	716,260
Painting	0.01 (TEC)	358,130
Total Installation Costs		$10,743,800
INDIRECT COSTS		
Engineering/Supervision	0.10 (TEC)	3,581,280
Construction/Field Cost	0.05 (TEC)	1,790,640
Contractor Fees	0.10 (TEC)	3,581,280
Start-up	0.01 (TEC)	358,130
Performance test		200,000
Contingencies	0.03 (TEC)	1,074,380
Total Indirect Costs		$10,585,700
TOTAL INSTALLED COSTS (TIC)		$57,142,300

*Represents the cost of all the equipment in the system, including instruments and controls.

11/22/91

TABLE 2. ANNUAL OPERATING COSTS - FLUIDIZED BED BOILER
CASE 1A

ITEMIZED EXPENDITURES	Rate			COST IN 1991 DOLLARS
Labor				
Operating	hourly rate	$12.50	336 hr/wk	$218,400
Maintenance	hourly rate	$12.50	28 hr/wk	18,200
Supervisory	hourly rate	$12.50	28 hr/wk	18,200
Maintenance materials	0.07 (TEC)			2,506,900
Utility Credits				
Electricity	kwhr rate	$0.05		(12,779,680)
Steam	$/1000lb	$3.00		(4,955,750)
Utility Costs				
Make-up Water Treat	$/1000lb	$0.24		$404,430
BFW Treatment	$/klb Steam	$0.01		$32,870
Ash Disposal	$/ton	$53.00		$1,822,930
Total Direct Costs				($12,713,500)
INDIRECT COSTS				
Capital recovery	CRF =	0.1315		$7,512,710
Overhead	0.6	(Labor)		1,657,020
G&A/insurance/taxes	0.04	(TIC)		2,285,690
Total Indirect Costs				$11,455,400
TOTAL ANNUAL OPERATING COSTS				($1,258,100)

TABLE 3. REFERENCE TABLE FOR FLUIDIZED BED BOILER ESTIMATING
CASE 1A

System Data Fluidized Bed Boiler		
TIC		$57,142,300
ELECTRICITY PRODUCTION, KW-HR	30,713	
HIGH PRESSURE STEAM PRODUCTION, LB/HR	395,000	
LOW PRESSURE STEAM, LB/HR	198,500	
MAKE-UP WATER, LB/HR	202,490	
FUEL		
LHV Nat Gas (Btu/scf)	909	
MM Btu/hr	0.00	
ASH, LB/HR	8,266	
ECONOMIC DATA		
CRF-sys	0.1315	
Interest Rate	10%	
Equipment Life	15	
Fuel Cost ($/MM Btu)		$2.50
Cost of Electricity ($/kw-hr)		$0.05
Cost of Steam ($/1000lb)		$3.00
Cost of Make-up Water Treatment ($/1000lb)		$0.24
Cost of BFW Treatment ($/1000lb of Steam)		$0.01
Cost of Ash Disposal ($/ton)		$53.00
OPERATING DATA		
Annual Hours	8760	
Capacity Factor	0.95	

CASE 1A

Boiler Feed Water, lb/hr 398,990

BFW Chemical Usage	lb/hr	lb/yr
Disodium Phosphate	0.20	1,660.2
Neutralizing Amine	0.60	4,980.6
Hydrazine	1.99	16,602.0

TABLE 1. CAPITAL EXPENSES - FLUIDIZED BED BOILER
CASE 1B

ITEMIZED EXPENDITURES		COST IN 1991 DOLLARS
DIRECT COSTS		
PURCHASED EQUIPMENT		
All Equipment		$31,760,000
Taxes and Freight	0.08 (TCC)	2,540,800
Total Equipment Costs (TEC)		$34,300,800
INSTALLATION		
Foundation and supports	0.08 (TEC)	2,744,060
Handling and erection	0.14 (TEC)	4,802,110
Electrical	0.04 (TEC)	1,372,030
Insulation	0.01 (TEC)	343,010
Piping	0.02 (TEC)	686,020
Painting	0.01 (TEC)	343,010
Total Installation Costs		$10,290,200
INDIRECT COSTS		
Engineering/Supervision	0.10 (TEC)	3,430,080
Construction/Field Cost	0.05 (TEC)	1,715,040
Contractor Fees	0.10 (TEC)	3,430,080
Start-up	0.01 (TEC)	343,010
Performance test		200,000
Contingencies	0.03 (TEC)	1,029,020
Total Indirect Costs		$10,147,200
TOTAL INSTALLED COSTS (TIC)		$54,738,200

*Represents the cost of all the equipment in the system, including instruments and controls.

11/22/91

TABLE 2. ANNUAL OPERATING COSTS - FLUIDIZED BED BOILER
CASE 1B

ITEMIZED EXPENDITURES	Rate			COST IN 1991 DOLLARS
Labor				
Operating	hourly rate	$12.50	336 hr/wk	$218,400
Maintenance	hourly rate	$12.50	28 hr/wk	18,200
Supervisory	hourly rate	$12.50	28 hr/wk	18,200
Maintenance materials	0.07 (TEC)			2,401,060
Utility Credits				
Electricity	kwhr rate	$0.05		(12,883,700)
Steam	$/1000lb	$3.00		(4,955,750)
Utility Costs				
Make-up Water Treat	$/1000lb	$0.24		$404,430
BFW Treatment	$/klb Steam	$0.01		$32,870
Ash Disposal	$/ton	$53.00		$1,822,930
Total Direct Costs				($12,923,400)
INDIRECT COSTS				
Capital recovery	CRF =	0.1315		$7,196,640
Overhead	0.6	(Labor)		1,593,520
G&A/insurance/taxes	0.04	(TIC)		2,189,530
Total Indirect Costs				$10,979,700
TOTAL ANNUAL OPERATING COSTS				($1,943,700)

TABLE 3. REFERENCE TABLE FOR FLUIDIZED BED BOILER ESTIMATING
CASE 1B

System Data Fluidized Bed Boiler		
TIC		$54,738,200
ELECTRICITY PRODUCTION, KW-HR	30,963	
HIGH PRESSURE STEAM PRODUCTION, LB/HR	395,000	
LOW PRESSURE STEAM, LB/HR	198,500	
MAKE-UP WATER, LB/HR	202,490	
FUEL		
LHV Nat Gas (Btu/scf)	909	
MM Btu/hr	0.00	
ASH, LB/HR	8,266	
ECONOMIC DATA		
CRF-sys	0.1315	
Interest Rate	10%	
Equipment Life	15	
Fuel Cost ($/MM Btu)		$2.50
Cost of Electricity ($/kw-hr)		$0.05
Cost of Steam ($/1000lb)		$3.00
Cost of Make-up Water Treatment ($/1000lb)		$0.24
Cost of BFW Treatment ($/1000lb of Steam)		$0.01
Cost of Ash Disposal ($/ton)		$53.00
OPERATING DATA		
Annual Hours	8760	
Capacity Factor	0.95	

CASE 1B

Boiler Feed Water, lb/hr 398,990

BFW Chemical Usage	lb/hr	lb/yr
Disodium Phosphate	0.20	1,660.2
Neutralizing Amine	0.60	4,980.6
Hydrazine	1.99	16,602.0

TABLE 1. CAPITAL EXPENSES - FLUIDIZED BED BOILER
CASE 2

ITEMIZED EXPENDITURES		COST IN 1991 DOLLARS
DIRECT COSTS		
PURCHASED EQUIPMENT		
All Equipment		$28,560,000
Taxes and Freight	0.08 (TCC)	2,284,800
Total Equipment Costs (TEC)		$30,844,800
INSTALLATION		
Foundation and supports	0.08 (TEC)	2,467,580
Handling and erection	0.14 (TEC)	4,318,270
Electrical	0.04 (TEC)	1,233,790
Insulation	0.01 (TEC)	308,450
Piping	0.02 (TEC)	616,900
Painting	0.01 (TEC)	308,450
Total Installation Costs		$9,253,400
INDIRECT COSTS		
Engineering/Supervision	0.10 (TEC)	3,084,480
Construction/Field Cost	0.05 (TEC)	1,542,240
Contractor Fees	0.10 (TEC)	3,084,480
Start-up	0.01 (TEC)	308,450
Performance test		200,000
Contingencies	0.03 (TEC)	925,340
Total Indirect Costs		$9,145,000
TOTAL INSTALLED COSTS (TIC)		$49,243,200

*Represents the cost of all the equipment in the system, including instruments and controls.

11/22/91

TABLE 2. ANNUAL OPERATING COSTS - FLUIDIZED BED BOILER
CASE 2

ITEMIZED EXPENDITURES	Rate			COST IN 1991 DOLLARS
Labor				
Operating	hourly rate	$12.50	336 hr/wk	$218,400
Maintenance	hourly rate	$12.50	28 hr/wk	18,200
Supervisory	hourly rate	$12.50	28 hr/wk	18,200
Maintenance materials	0.07 (TEC)			2,159,140
Utility Credits				
Electricity	kwhr rate	$0.05		(7,557,620)
Steam	$/1000lb	$3.00		(5,128,020)
Utility Costs				
Make-up Water Treat	$/1000lb	$0.24		$415,810
BFW Treatment	$/klb Steam	$0.01		$22,970
Ash Disposal	$/ton	$53.00		$2,430,710
Total Direct Costs				($7,402,200)
INDIRECT COSTS				
Capital recovery	CRF =	0.1315		$6,474,190
Overhead	0.6	(Labor)		1,448,360
G&A/insurance/taxes	0.04	(TIC)		1,969,730
Total Indirect Costs				$9,892,300
TOTAL ANNUAL OPERATING COSTS				$2,490,100

TABLE 3. REFERENCE TABLE FOR FLUIDIZED BED BOILER ESTIMATING
CASE 2

System Data Fluidized Bed Boiler		
TIC		$49,243,200
ELECTRICITY PRODUCTION, KW-HR	18,163	
HIGH PRESSURE STEAM PRODUCTION, LB/HR	276,000	
LOW PRESSURE STEAM, LB/HR	205,400	
MAKE-UP WATER, LB/HR	208,188	
FUEL		
LHV Nat Gas (Btu/scf)	909	
MM Btu/hr	0.00	
ASH, LB/HR	11,022	
ECONOMIC DATA		
CRF-sys	0.1315	
Interest Rate	10%	
Equipment Life	15	
Fuel Cost ($/MM Btu)		$2.50
Cost of Electricity ($/kw-hr)		$0.05
Cost of Steam ($/1000lb)		$3.00
Cost of Make-up Water Treatment ($/1000lb)		$0.24
Cost of BFW Treatment ($/1000lb of Steam)		$0.01
Cost of Ash Disposal ($/ton)		$53.00
OPERATING DATA		
Annual Hours	8760	
Capacity Factor	0.95	

CASE 2

Boiler Feed Water, lb/hr 278,788

BFW Chemical Usage	lb/hr	lb/yr
Disodium Phosphate	0.14	1,160.0
Neutralizing Amine	0.42	3,480.1
Hydrazine	1.39	11,600.4

TABLE 1. CAPITAL EXPENSES - FLUIDIZED BED BOILER
CASE 3

ITEMIZED EXPENDITURES		COST IN 1991 DOLLARS
DIRECT COSTS		
PURCHASED EQUIPMENT		
All Equipment		$28,060,000
Taxes and Freight	0.08 (TCC)	2,244,800
Total Equipment Costs (TEC)		$30,304,800
INSTALLATION		
Foundation and supports	0.08 (TEC)	2,424,380
Handling and erection	0.14 (TEC)	4,242,670
Electrical	0.04 (TEC)	1,212,190
Insulation	0.01 (TEC)	303,050
Piping	0.02 (TEC)	606,100
Painting	0.01 (TEC)	303,050
Total Installation Costs		$9,091,400
INDIRECT COSTS		
Engineering/Supervision	0.10 (TEC)	3,030,480
Construction/Field Cost	0.05 (TEC)	1,515,240
Contractor Fees	0.10 (TEC)	3,030,480
Start-up	0.01 (TEC)	303,050
Performance test		200,000
Contingencies	0.03 (TEC)	909,140
Total Indirect Costs		$8,988,400
TOTAL INSTALLED COSTS (TIC)		$48,384,600

*Represents the cost of all the equipment in the system, including instruments and controls.

11/22/91

TABLE 2. ANNUAL OPERATING COSTS - FLUIDIZED BED BOILER
CASE 3

ITEMIZED EXPENDITURES	Rate			COST IN 1991 DOLLARS
Labor				
Operating	hourly rate	$12.50	336 hr/wk	$218,400
Maintenance	hourly rate	$12.50	28 hr/wk	18,200
Supervisory	hourly rate	$12.50	28 hr/wk	18,200
Maintenance materials	0.07 (TEC)			2,121,340
Utility Credits				
Electricity	kwhr rate	$0.05		(7,888,840)
Steam	$/1000lb	$3.00		(5,370,190)
Utility Costs				
Make-up Water Treat	$/1000lb	$0.24		$435,380
BFW Treatment	$/klb Steam	$0.01		$23,720
Ash Disposal	$/ton	$53.00		$2,162,330
Total Direct Costs				($8,261,500)
INDIRECT COSTS				
Capital recovery	CRF =	0.1315		$6,361,310
Overhead	0.6	(Labor)		1,425,680
G&A/insurance/taxes	0.04	(TIC)		1,935,380
Total Indirect Costs				$9,722,400
TOTAL ANNUAL OPERATING COSTS				$1,460,900

TABLE 3. REFERENCE TABLE FOR FLUIDIZED BED BOILER ESTIMATING
CASE 3

System Data Fluidized Bed Boiler		
TIC		$48,384,600
ELECTRICITY PRODUCTION, KW-HR	18,959	
HIGH PRESSURE STEAM PRODUCTION, LB/HR	285,000	
LOW PRESSURE STEAM, LB/HR	215,100	
MAKE-UP WATER, LB/HR	217,988	
FUEL		
LHV Nat Gas (Btu/scf)	909	
MM Btu/hr	0.00	
ASH, LB/HR	9,805	
ECONOMIC DATA		
CRF-sys	0.1315	
Interest Rate	10%	
Equipment Life	15	
Fuel Cost ($/MM Btu)		$2.50
Cost of Electricity ($/kw-hr)		$0.05
Cost of Steam ($/1000lb)		$3.00
Cost of Make-up Water Treatment ($/1000lb)		$0.24
Cost of BFW Treatment ($/1000lb of Steam)		$0.01
Cost of Ash Disposal ($/ton)		$53.00
OPERATING DATA		
Annual Hours	8760	
Capacity Factor	0.95	

CASE 3

Boiler Feed Water, lb/hr 287,879

BFW Chemical Usage	lb/hr	lb/yr
Disodium Phosphate	0.14	1,197.9
Neutralizing Amine	0.43	3,593.6
Hydrazine	1.44	11,978.6

TABLE 1. CAPITAL EXPENSES - FLUIDIZED BED BOILER
CASE 4

ITEMIZED EXPENDITURES		COST IN 1991 DOLLARS
DIRECT COSTS		
PURCHASED EQUIPMENT		
All Equipment		$27,490,000
Taxes and Freight	0.08 (TCC)	2,199,200
Total Equipment Costs (TEC)		$29,689,200
INSTALLATION		
Foundation and supports	0.08 (TEC)	2,375,140
Handling and erection	0.14 (TEC)	4,156,490
Electrical	0.04 (TEC)	1,187,570
Insulation	0.01 (TEC)	296,890
Piping	0.02 (TEC)	593,780
Painting	0.01 (TEC)	296,890
Total Installation Costs		$8,906,800
INDIRECT COSTS		
Engineering/Supervision	0.10 (TEC)	2,968,920
Construction/Field Cost	0.05 (TEC)	1,484,460
Contractor Fees	0.10 (TEC)	2,968,920
Start-up	0.01 (TEC)	296,890
Performance test		200,000
Contingencies	0.03 (TEC)	890,680
Total Indirect Costs		$8,809,900
TOTAL INSTALLED COSTS (TIC)		$47,405,900

*Represents the cost of all the equipment in the system, including instruments and controls.

11/22/91

TABLE 2. ANNUAL OPERATING COSTS - FLUIDIZED BED BOILER
CASE 4

ITEMIZED EXPENDITURES	Rate			COST IN 1991 DOLLARS
Labor				
Operating	hourly rate	$12.50	336 hr/wk	$218,400
Maintenance	hourly rate	$12.50	28 hr/wk	18,200
Supervisory	hourly rate	$12.50	28 hr/wk	18,200
Maintenance materials	0.07 (TEC)			2,078,240
Utility Credits				
Electricity	kwhr rate	$0.05		(6,461,620)
Steam	$/1000lb	$3.00		(5,115,530)
Utility Costs				
Make-up Water Treat	$/1000lb	$0.24		$414,100
BFW Treatment	$/klb Steam	$0.01		$20,060
Ash Disposal	$/ton	$53.00		$3,302,040
Total Direct Costs				($5,507,900)
INDIRECT COSTS				
Capital recovery	CRF =	0.1315		$6,232,630
Overhead	0.6	(Labor)		1,399,820
G&A/insurance/taxes	0.04	(TIC)		1,896,240
Total Indirect Costs				$9,528,700
TOTAL ANNUAL OPERATING COSTS				$4,020,800

TABLE 3. REFERENCE TABLE FOR FLUIDIZED BED BOILER ESTIMATING
CASE 4

System Data Fluidized Bed Boiler		
TIC		$47,405,900
ELECTRICITY PRODUCTION, KW-HR	15,529	
HIGH PRESSURE STEAM PRODUCTION, LB/HR	241,000	
LOW PRESSURE STEAM, LB/HR	204,900	
MAKE-UP WATER, LB/HR	207,334	
FUEL		
LHV Nat Gas (Btu/scf)	909	
MM Btu/hr	0.00	
ASH, LB/HR	14,973	
ECONOMIC DATA		
CRF-sys	0.1315	
Interest Rate	10%	
Equipment Life	15	
Fuel Cost ($/MM Btu)		$2.50
Cost of Electricity ($/kw-hr)		$0.05
Cost of Steam ($/1000lb)		$3.00
Cost of Make-up Water Treatment ($/1000lb)		$0.24
Cost of BFW Treatment ($/1000lb of Steam)		$0.01
Cost of Ash Disposal ($/ton)		$53.00
OPERATING DATA		
Annual Hours	8760	
Capacity Factor	0.95	

CASE 4

Boiler Feed Water, lb/hr 243,434

BFW Chemical Usage	lb/hr	lb/yr
Disodium Phosphate	0.12	1,012.9
Neutralizing Amine	0.37	3,038.8
Hydrazine	1.22	10,129.3

TABLE 1. CAPITAL EXPENSES - FLUIDIZED BED BOILER
CASE 5

ITEMIZED EXPENDITURES		COST IN 1991 DOLLARS
DIRECT COSTS		
PURCHASED EQUIPMENT		
All Equipment		$28,740,000
Taxes and Freight	0.08 (TCC)	2,299,200
Total Equipment Costs (TEC)		$31,039,200
INSTALLATION		
Foundation and supports	0.08 (TEC)	2,483,140
Handling and erection	0.14 (TEC)	4,345,490
Electrical	0.04 (TEC)	1,241,570
Insulation	0.01 (TEC)	310,390
Piping	0.02 (TEC)	620,780
Painting	0.01 (TEC)	310,390
Total Installation Costs		$9,311,800
INDIRECT COSTS		
Engineering/Supervision	0.10 (TEC)	3,103,920
Construction/Field Cost	0.05 (TEC)	1,551,960
Contractor Fees	0.10 (TEC)	3,103,920
Start-up	0.01 (TEC)	310,390
Performance test		200,000
Contingencies	0.03 (TEC)	931,180
Total Indirect Costs		$9,201,400
TOTAL INSTALLED COSTS (TIC)		$49,552,400

*Represents the cost of all the equipment in the system, including instruments and controls.

11/22/91

TABLE 2. ANNUAL OPERATING COSTS - FLUIDIZED BED BOILER
CASE 5

ITEMIZED EXPENDITURES	Rate			COST IN 1991 DOLLARS
Labor				
Operating	hourly rate	$12.50	336 hr/wk	$218,400
Maintenance	hourly rate	$12.50	28 hr/wk	18,200
Supervisory	hourly rate	$12.50	28 hr/wk	18,200
Maintenance materials	0.07 (TEC)			2,172,740
Utility Credits				
Electricity	kwhr rate	$0.05		(7,659,150)
Steam	$/1000lb	$3.00		(5,250,350)
Utility Costs				
Make-up Water Treat	$/1000lb	$0.24		$425,660
BFW Treatment	$/klb Steam	$0.01		$23,220
Ash Disposal	$/ton	$53.00		$2,335,000
Total Direct Costs				($7,698,100)
INDIRECT COSTS				
Capital recovery	CRF =	0.1315		$6,514,840
Overhead	0.6	(Labor)		1,456,520
G&A/insurance/taxes	0.04	(TIC)		1,982,100
Total Indirect Costs				$9,953,500
TOTAL ANNUAL OPERATING COSTS				$2,255,400

TABLE 3. REFERENCE TABLE FOR FLUIDIZED BED BOILER ESTIMATING
CASE 5

System Data Fluidized Bed Boiler		
TIC		$49,552,400
ELECTRICITY PRODUCTION, KW-HR	18,407	
HIGH PRESSURE STEAM PRODUCTION, LB/HR	279,000	
LOW PRESSURE STEAM, LB/HR	210,300	
MAKE-UP WATER, LB/HR	213,118	
FUEL		
LHV Nat Gas (Btu/scf)	909	
MM Btu/hr	0.00	
ASH, LB/HR	10,588	
ECONOMIC DATA		
CRF-sys	0.1315	
Interest Rate	10%	
Equipment Life	15	
Fuel Cost ($/MM Btu)		$2.50
Cost of Electricity ($/kw-hr)		$0.05
Cost of Steam ($/1000lb)		$3.00
Cost of Make-up Water Treatment ($/1000lb)		$0.24
Cost of BFW Treatment ($/1000lb of Steam)		$0.01
Cost of Ash Disposal ($/ton)		$53.00
OPERATING DATA		
Annual Hours	8760	
Capacity Factor	0.95	

CASE 5

Boiler Feed Water, lb/hr 281,818

BFW Chemical Usage	lb/hr	lb/yr
Disodium Phosphate	0.14	1,172.6
Neutralizing Amine	0.42	3,517.9
Hydrazine	1.41	11,726.5

TABLE 1. CAPITAL EXPENSES - FLUIDIZED BED BOILER
CASE 6

ITEMIZED EXPENDITURES		COST IN 1991 DOLLARS
DIRECT COSTS		
PURCHASED EQUIPMENT		
All Equipment		$25,480,000
Taxes and Freight	0.08 (TCC)	2,038,400
Total Equipment Costs (TEC)		$27,518,400
INSTALLATION		
Foundation and supports	0.08 (TEC)	2,201,470
Handling and erection	0.14 (TEC)	3,852,580
Electrical	0.04 (TEC)	1,100,740
Insulation	0.01 (TEC)	275,180
Piping	0.02 (TEC)	550,370
Painting	0.01 (TEC)	275,180
Total Installation Costs		$8,255,500
INDIRECT COSTS		
Engineering/Supervision	0.10 (TEC)	2,751,840
Construction/Field Cost	0.05 (TEC)	1,375,920
Contractor Fees	0.10 (TEC)	2,751,840
Start-up	0.01 (TEC)	275,180
Performance test		200,000
Contingencies	0.03 (TEC)	825,550
Total Indirect Costs		$8,180,300
TOTAL INSTALLED COSTS (TIC)		$43,954,200

*Represents the cost of all the equipment in the system, including instruments and controls.

11/22/91

TABLE 2. ANNUAL OPERATING COSTS - FLUIDIZED BED BOILER
CASE 6

ITEMIZED EXPENDITURES	Rate			COST IN 1991 DOLLARS
Labor				
Operating	hourly rate	$12.50	336 hr/wk	$218,400
Maintenance	hourly rate	$12.50	28 hr/wk	18,200
Supervisory	hourly rate	$12.50	28 hr/wk	18,200
Maintenance materials	0.07 (TEC)			1,926,290
Utility Credits				
Electricity	kwhr rate	$0.05		(5,812,920)
Steam	$/1000lb	$3.00		(5,250,350)
Utility Costs				
Make-up Water Treat	$/1000lb	$0.24		$411,340
BFW Treatment	$/klb Steam	$0.01		$17,730
Ash Disposal	$/ton	$53.00		$6,637,160
Total Direct Costs				($1,816,000)
INDIRECT COSTS				
Capital recovery	CRF =	0.1315		$5,778,820
Overhead	0.6	(Labor)		1,308,650
G&A/insurance/taxes	0.04	(TIC)		1,758,170
Total Indirect Costs				$8,845,600
TOTAL ANNUAL OPERATING COSTS				$7,029,600

TABLE 3. REFERENCE TABLE FOR FLUIDIZED BED BOILER ESTIMATING
CASE 6

System Data Fluidized Bed Boiler		
TIC		$43,954,200
ELECTRICITY PRODUCTION, KW-HR	13,970	
HIGH PRESSURE STEAM PRODUCTION, LB/HR	213,000	
LOW PRESSURE STEAM, LB/HR	210,300	
MAKE-UP WATER, LB/HR	205,952	
FUEL		
LHV Nat Gas (Btu/scf)	909	
MM Btu/hr	0.00	
ASH, LB/HR	30,096	
ECONOMIC DATA		
CRF-sys	0.1315	
Interest Rate	10%	
Equipment Life	15	
Fuel Cost ($/MM Btu)		$2.50
Cost of Electricity ($/kw-hr)		$0.05
Cost of Steam ($/1000lb)		$3.00
Cost of Make-up Water Treatment ($/1000lb)		$0.24
Cost of BFW Treatment ($/1000lb of Steam)		$0.01
Cost of Ash Disposal ($/ton)		$53.00
OPERATING DATA		
Annual Hours	8760	
Capacity Factor	0.95	

TABLE 1. CAPITAL EXPENSES - FLUIDIZED BED BOILER
CASE 1

ITEMIZED EXPENDITURES		COST IN 1991 DOLLARS
DIRECT COSTS		
PURCHASED EQUIPMENT		
All Equipment		$33,760,000
Taxes and Freight	0.08 (TCC)	2,700,800
Total Equipment Costs (TEC)		$36,460,800
INSTALLATION		
Foundation and supports	0.08 (TEC)	2,916,860
Handling and erection	0.14 (TEC)	5,104,510
Electrical	0.04 (TEC)	1,458,430
Insulation	0.01 (TEC)	364,610
Piping	0.02 (TEC)	729,220
Painting	0.01 (TEC)	364,610
Total Installation Costs		$10,938,200
INDIRECT COSTS		
Engineering/Supervision	0.10 (TEC)	3,646,080
Construction/Field Cost	0.05 (TEC)	1,823,040
Contractor Fees	0.10 (TEC)	3,646,080
Start-up	0.01 (TEC)	364,610
Performance test		200,000
Contingencies	0.03 (TEC)	1,093,820
Total Indirect Costs		$10,773,600
TOTAL INSTALLED COSTS (TIC)		$58,172,600

*Represents the cost of all the equipment in the system, including instruments and controls.

11/22/91

TABLE 2. ANNUAL OPERATING COSTS - FLUIDIZED BED BOILER
CASE 1

ITEMIZED EXPENDITURES	Rate			COST IN 1991 DOLLARS
Labor				
Operating	hourly rate	$12.50	336 hr/wk	$218,400
Maintenance	hourly rate	$12.50	28 hr/wk	18,200
Supervisory	hourly rate	$12.50	28 hr/wk	18,200
Maintenance materials	0.07 (TEC)			2,552,260
Utility Credits				
Electricity	kwhr rate	$0.05		(13,995,110)
Steam	$/1000lb	$3.00		(4,955,750)
Utility Costs				
Make-up Water Treat	$/1000lb	$0.24		$404,430
BFW Treatment	$/klb Steam	$0.01		$32,870
Ash Disposal	$/ton	$53.00		$1,822,930
Total Direct Costs				($13,883,600)
INDIRECT COSTS				
Capital recovery	CRF =	0.1315		$7,648,170
Overhead	0.6	(Labor)		1,684,240
G&A/insurance/taxes	0.04	(TIC)		2,326,900
Total Indirect Costs				$11,659,300
TOTAL ANNUAL OPERATING COSTS				($2,224,300)

TABLE 3. REFERENCE TABLE FOR FLUIDIZED BED BOILER ESTIMATING
CASE 1

System Data Fluidized Bed Boiler		
TIC		$58,172,600
ELECTRICITY PRODUCTION, KW-HR	33,634	
HIGH PRESSURE STEAM PRODUCTION, LB/HR	395,000	
LOW PRESSURE STEAM, LB/HR	198,500	
MAKE-UP WATER, LB/HR	202,490	
FUEL		
LHV Nat Gas (Btu/scf)	909	
MM Btu/hr	0.00	
ASH, LB/HR	8,266	
ECONOMIC DATA		
CRF-sys	0.1315	
Interest Rate	10%	
Equipment Life	15	
Fuel Cost ($/MM Btu)		$2.50
Cost of Electricity ($/kw-hr)		$0.05
Cost of Steam ($/1000lb)		$3.00
Cost of Make-up Water Treatment ($/1000lb)		$0.24
Cost of BFW Treatment ($/1000lb of Steam)		$0.01
Cost of Ash Disposal ($/ton)		$53.00
OPERATING DATA		
Annual Hours	8760	
Capacity Factor	0.95	

CASE 1

Boiler Feed Water, lb/hr 398,990

BFW Chemical Usage	lb/hr	lb/yr
Disodium Phosphate	0.20	1,660.2
Neutralizing Amine	0.60	4,980.6
Hydrazine	1.99	16,602.0