Wastewater Treatment Options for the Biomass-To-Ethanol Process

Presented to:
National Renewable Energy Laboratory

By:
Merrick & Company

10/22/1998

Task 6

Subcontract No. AXE-8-18020-01

Merrick Project No. 19013104

DRAFT REPORT
TABLE OF CONTENTS

I. Introduction
II. Waste Water Treatment Processes
III. Evaporator Syrup Disposition
IV. Flow and Strength of Waste Water
V. Waste Water / Sludge Processing
VI. Evaporation
VII. Irrigation
VIII. Treatment Alternatives
IX. Suggested Treatment Options
X. Effluent Quality
XI. Aspen Model
XII. Treatment of Anaerobic Off Gas
XIII. Plant On-stream Factor
XIV. General Plant
XV. Environmental Emissions
XVI. Environmental Permits
XVII. Summary and Conclusions
XVIII. References

Appendices:
A. Process Map
B. Comparison of Four Alternatives
C. Block Flow Diagram / Heat and Material Balance
D. Reasons for Anaerobic/Aerobic Process Selection
E. Design Sizing for Peak Loads
F. Cost Estimates
G. Waste Water Treatment Aspen Model
H. Evaporator Syrup Disposition
I. Process Flow Diagrams

Appendix A

Process Map

"MAP" OF TREATMENT OPTIONS

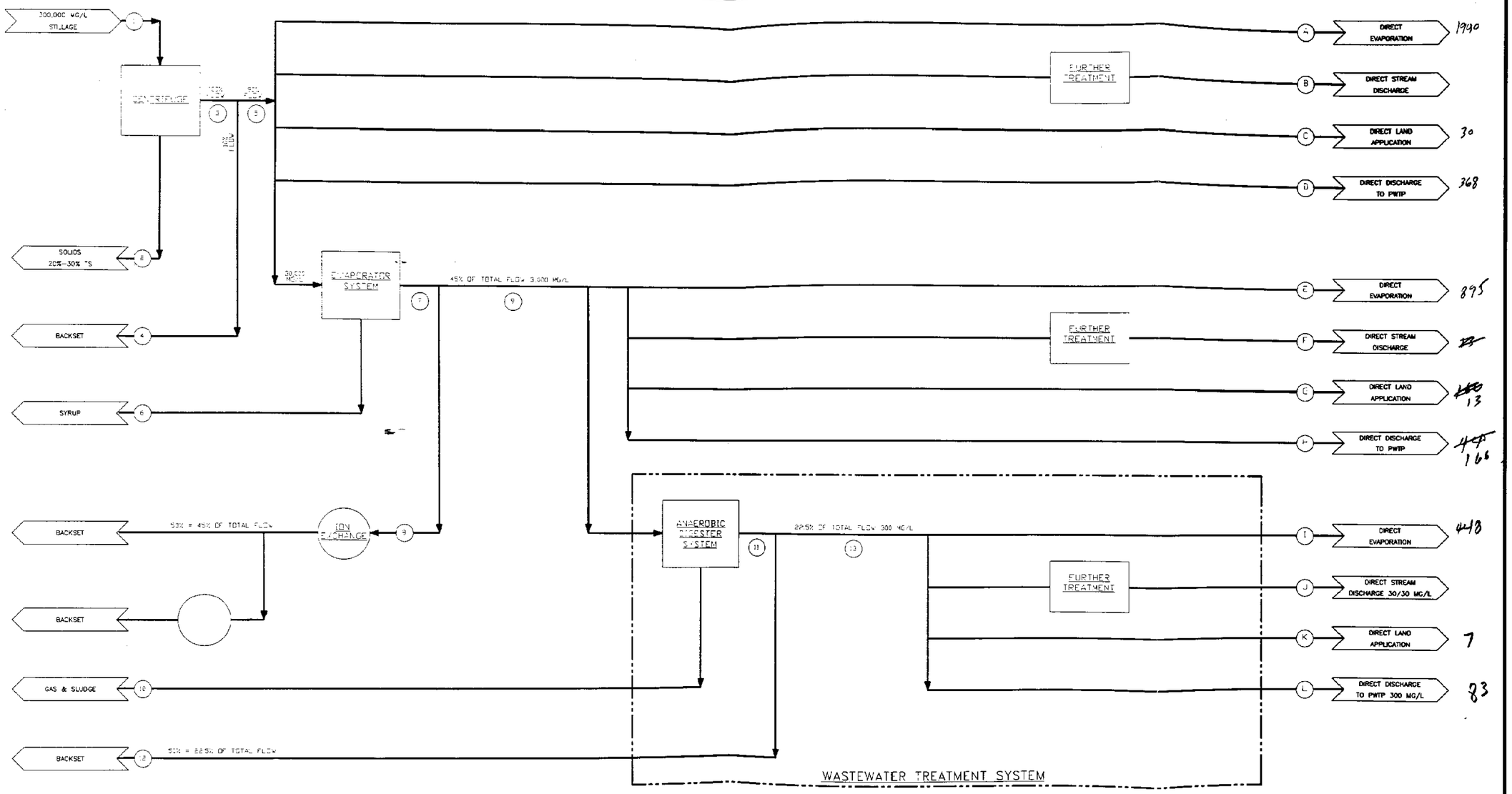

SCALE		DATE
DRAWN BY	AF	6/19/98
CHECKED BY		
CHECKED BY		
DESIGNED BY		
CAD FILE		SHT # 1

MERRICK

NATIONAL RENEWABLE ENERGY LABORATORY
Biotechnology Center For Fuels And Chemicals

WASTEWATER TREATMENT PROCESS OPTIONS

1-1

A

u/process/3104/softwood/map.dwg

MAP

DISCUSSION OF POSSIBLE OUTCOMES OF TREATMENT AND DISPOSAL OPTIONS:

OUTCOME	DISCUSSION
A. (Stream 5 from Centrifuge) Direct Evaporation	Extremely energy intensive, not recommended.
B. (Stream 5 from Centrifuge) Direct Stream Discharge	Not permissible in the USA without extensive treatment.
C. (Stream 5 from Centrifuge) Direct Land Application	Very large land acreage required.
D. (Stream 5 from Centrifuge) Direct Discharge to PWTP	Extremely expensive as flow and load are each very high.
E. (Stream 9 from Evaporator) Direct Evaporation	45% of A. with the same result.
F. (Stream 9 from Evaporator) Direct Stream Discharge	Not permissible in the USA without further treatment.
G. (Stream 9 from Evaporator) Direct Land Application	45% of E with the same result.
H. (Stream 9 from Evaporator) Direct Discharge to PWTP	Still very expensive.
I. (Stream 13 from Anaerobic System) Direct Evaporation	A possible outcome.
J. (Stream 13 from Anaerobic System) Direct Stream Discharge 30/30 mg/L	A possible outcome, but not permissible without some further treatment.
K. (Stream 13 from Anaerobic System) Direct Land Application	A possible outcome, but very site specific.
L. (Stream 13 from Anaerobic System) Direct Discharge to PWTP 300 mg/L	This is a possible outcome.

Add expected costs for each at 1 MGD or other flow to show that the expected typical case will be on-site treatment.

version 3-30-98

Map mass balance

flow no.	1	2	3	4	5	6	7	8	9	10	11	12	13
flow name	stillage	centrifuge solids	centrifuge liquids	centrifuge backset	feed to next process	evaporator syrup	evaporator condensate	evaporator backset	feed to methanator	methanator effluent	Methanator backset	feed to aerobic treatment	aerobic effluent
flow rate kg/h	438,183.0	2,081.4	436,101.63	43,610.16	392,491.47	43,724.87	348,766.60	174,383.30	174,383.30	174,383 30	87,191 65	87,191.65	87,191 65
backset (%)	0.0	0.0	0.00	10.00	0 00	0.00	0 00	50 00	0 00	0.00	50 00	0 00	0 00
% TS	3.8	21.0	3.71	3.71	3.71	30.00	0.42	0.42	0 42	0 0363	0.04	0 04	0 002
% Suspended Solids	0.1	18.0	0.00	0.00	0.00	0 04	0.00	0 00	0 00	0 0029	0 0029	0 0029	0 0002
%dissolved solids	3.7	63.1	3.71	3.71	3.71	29.96	0 42	0 42	0 42	0 03	0 033	0 033	0 00
% moisture	96.2	79.0	96.29	96.29	96.29	70.00	99.58	99 58	99 58	99 96	99 96	99 96	99 99
kg/h of moisture	421,553.0	1,643.6	419,929.14	41,992.91	377,936.23	30,607.41	347,311.08	173,655 54	173,655 54	174,320 06	87,160 03	87,160 03	87,182 93
kg/h suspended solids	394.4	374.6	19.72	1.97	17.75	17.75	0.00	0 00	0 00	5.02	2 51	2 51	0 15
kg/h of total solids	16,630 0	437.8	16,192.20	1,619 22	14,572 98	13,117.46	1,455.52	727.76	727 76	63 24	31 62	31 62	1 46
kg/h of dissolved solids	16,235.6	63.1	16,172.49	1,617.25	14,555.24	13,099.71	1,455.52	727.76	727.76	58.22	29 11	29 11	1 31
kg/h COD	16,630.0	437.8	16,192.2	1,619.2	14,573.0	32,793.7	1,455.5	727.8	727.8	58 22	29 11	29 11	1 46
mg/l COD	37,952.2	210,340.0	37,129.4	37,129.4	37,129.4	750,000.0	4,173.3	4,173 3	4,173.3	333.9	333.9	333 9	16 7
Bioreactor Loading (kg/m3/d)									12 00			1 00	
Bioreactor Volume (m3)									1,455 52			698 65	
COD Reduction									0 92			0 95	
Biogas Production (m3/d)									3,936 90			0 00	

version 3-30-98	Map mass balance												
flow no.	1	2	3	4	5	6	7	8	9	10	11	12	13
flow name	stillage	centrifuge solids	centrifuge liquids	centrifuge backset	feed to next process	evaporator syrup	evaporator condensate	evaporator backset	feed to methanator	methanator effluent	Methanator backset	feed to aerobic treatment	aerobic effluent
flow rate kg/h	668,314.0	38.8	668,275.20	66,827.52	601,447.68	98,264.72	503,182.97	251,591.48	251,591.48	251,591.48	125,795.74	125,795.74	125,795.74
backset (%)	0.0	0.0	0.00	10.00	0.00	0.00	0.00	50.00	0.00	0.00	50.00	0.00	0.00
% TS	5.4	22.4	5.45	5.45	5.45	30.00	0.65	0.65	0.65	0.0566	0.06	0.06	0.003
% Suspended Solids	0.0	18.0	0.00	0.00	0.00	0.00	0.00	0.00	0.00	0.0045	0.0045	0.0045	0.0003
%dissolved solids	5.4	1.7	5.45	5.45	5.45	30.00	0.65	0.65	0.65	0.05	0.052	0.052	0.00
% moisture	94.6	77.6	94.55	94.55	94.55	70.00	99.35	99.35	99.35	99.94	99.94	99.94	99.99
kg/h of moisture	631,911.0	30.1	631,881.27	63,188.13	568,693.14	68,785.30	499,907.51	249,953.76	249,953.76	251,449.16	125,724.58	125,724.58	125,783.16
kg/h suspended solids	7.4	7.0	0.37	0.04	0.33	0.33	0.00	0.00	0.00	11.30	5.65	5.65	0.33
kg/h of total solids	36,403.0	8.7	36,394.30	3,639.43	32,754.87	29,479.41	3,275.45	1,637.73	1,637.73	142.32	71.16	71.16	3.28
kg/h of dissolved solids	36,395.6	1.7	36,393.93	3,639.39	32,754.54	29,479.08	3,275.45	1,637.73	1,637.73	131.02	65.51	65.51	2.95
kg/h COD	36,403.0	8.7	36,394.3	3,639.4	32,754.9	73,698.5	3,275.5	1,637.7	1,637.7	131.02	65.51	65.51	3.28
mg/l COD	54,469.9	224,280.0	54,460.0	54,460.0	54,460.0	750,000.0	6,509.5	6,509.5	6,509.5	520.8	520.8	520.8	26.0
Bioreactor Loading (kg/m3/d)									12.00			1.00	
Bioreactor Volume (m3)									3,275.45			1,572.22	
COD Reduction									0.92			0.95	
Biogas Production (m3/d)									8,859.45			0.00	

version 3-30-98

Map mass balance

flow no.	1	2	3	4	5	6	7	8	9	10	11	12	13
flow name	stillage	centrifuge solids	centrifuge liquids	centrifuge backset	feed to next process	evaporator syrup	evaporator condensate	evaporator backset	feed to methanator	methanator effluent	Methanator backset	feed to aerobic treatment	aerobic effluent
flow rate kg/h	307,221.0	17.8	307,203.16	30,720.32	276,482.85	22,394.92	254,087.93	127,043.96	127,043.96	127,043.96	63,521.98	63,521.98	63,521.98
backset (%)	0.0	0.0	0.00	10.00	0.00	0.00	0.00	50.00	0.00	0.00	50.00	0.00	0.00
% TS	2.7	20.2	2.70	2.70	2.70	30.00	0.29	0.29	0.29	0.0255	0.03	0.03	0.001
% Suspended Solids	0.0	18.0	0.00	0.00	0.00	0.00	0.00	0.00	0.00	0.0020	0.0020	0.0020	0.0001
%dissolved solids	2.7	0.4	2.70	2.70	2.70	30.00	0.29	0.29	0.29	0.02	0.024	0.024	0.00
% moisture	97.3	79.8	97.30	97.30	97.30	70.00	99.71	99.71	99.71	99.97	99.97	99.97	99.99
kg/h of moisture	298,923.0	14.2	298,908.94	29,890.89	269,018.04	15,676.44	253,341.45	126,670.72	126,670.72	127,011.53	63,505.76	63,505.76	63,515.63
kg/h suspended solids	3.4	3.2	0.17	0.02	0.15	0.15	0.00	0.00	0.00	2.58	1.29	1.29	0.07
kg/h of total solids	8,298.0	3.6	8,294.40	829.44	7,464.96	6,718.48	746.48	373.24	373.24	32.43	16.22	16.22	0.75
kg/h of dissolved solids	8,294.6	0.4	8,294.23	829.42	7,464.80	6,718.32	746.48	373.24	373.24	29.86	14.93	14.93	0.67
kg/h COD	8,298.0	3.6	8,294.4	829.4	7,465.0	16,796.2	746.5	373.2	373.2	29.86	14.93	14.93	0.75
mg/l COD	27,009.9	202,058.0	26,999.7	26,999.7	26,999.7	750,000.0	2,937.9	2,937.9	2,937.9	235.0	235.0	235.0	11.8
Bioreactor Loading (kg/m3/d)									12.00			1.00	
Bioreactor Volume (m3)									746.48			358.31	
COD Reduction									0.92			0.95	
Biogas Production (m3/d)									2,019.08			0.00	

Appendix B

Comparison of Four Alternatives

NREL - Ethanol WWT Options

		Stream #	Flow, MGD	MGY	M#/Year	MM$/Year
A	Direct Evaporation	5	270	98710	822254	$ 1.990
B	Direct Stream Discharge		270	requires Denver Regional size plant		
C	Direct Land Application		270			$ 30
D	Discharge to POTW		270			$ 368
E	Direct Evaporation	9	122	44419	370014	$ 895
F	Direct Stream Discharge		122	requires Denver city sized plant		
G	Direct Land Application		122			$ 13
H	Discharge to POTW		122			$ 166
I	Direct Evaporation	13	61	22210	185007	$ 448
J	Direct Stream Discharge		61	requires		
K	Direct Land Application		61			$ 7
L	Discharge to POTW		61			$ 83

A, E, & I Direct Evaporation

1100 Btu per #

$ 2.20 per MMBtu

$ 2.420 per MM# fuel cost only

B, F, & J Direct Stream Discharge

requires meeting spec of 30 mg/L of BOD and TSS

requires treatment equivalent to a regional or large city treatment plant

(or dilution with inordinate volumes of fresh water - if allowed)

C, G, & K Direct Land Application

665 acres required for 1 MGD **Evaporati** Capital @ 8.00%

input => $ 1.800 per acre purchase and improvement c $ 1,197,000

input => $ 200 per acre tax + O&M per year Term

$169.75 P&I minus future value per acre per year 20 years

$245.886 per 1 MGD per year

Fut. Value

Direct Land Application 0.00% after

300 acres required for 1 MGD **Irrigation** sludge

$ 1.800 per acre purchase and improvement c $ 540,000

$ 200 per acre tax + O&M per year 60000

$169.75 P&I minus future value per acre per year

$110.926 per 1 MGD per year

($183.33)

D. H & L	Discharge to POTW	
	Use Enzymatic as Basis (lowest cost)	
	for 1 MGD. annual cost is	$ 1,361,000

Costs for POTW Treatment of Waste Water

Per Denver Metro example costs (1997):

The cost for POTW treatment is the sum of the following parameters:

a. $362 per ton of TSS

b. $363 per MGD (monthly charge based on daily average flow)
or $363x12 = $4356 per year per MGD average

c. $375 per ton of BOD_5

d. $695 per ton of Total Kjeldahl Nitrogen, TKN, (sum of organic and ammonia nitrogen)

These parameters are analysed on the daily average samples taken at the discharge into the POTW stream.

NREL -- Ethanol Waste Water Treatment

Cost Basis for POTW Treatment of Waste Water

POTW Costs:

Case *1x* -- Enzymati	units(daily	cost/unit	Daily Cos	Annual Cost
TSS =	0.045815 tons	$ 362	$ 17	
Flow =	1 MGD	$ 363	$ 12	
BOD =	9.85248 tons	$ 375	$ 3.695	
TKN =	0.01 tons	$ 695	$ 7	
bod/cod=0.5			$ 3.730	$ 1.361.565

Case *1y* -- Softwood	units(daily	cost/unit	Daily Cos	Annual Cost
TSS =	3.969245 tons	$ 362	$ 1.437	
Flow =	1.4 MGD	$ 363	$ 17	
BOD =	19.21392 tons	$ 375	$ 7.205	
TKN =	0.01 tons	$ 695	$ 7	
			$ 8.666	$ 3.163.081

Case *1z* -- Hardwood	units(daily	cost/unit	Daily Cos	Annual Cost
TSS =	1.95755 tons	$ 362	$ 709	
Flow =	2.2 MGD	$ 363	$ 27	
BOD =	43.23528 tons	$ 375	$ 16.213	
TKN =	0.01 tons	$ 695	$ 7	
			$ 16.955	$ 6.188.733

Appendix C

Block Flow Diagram / Water Balance

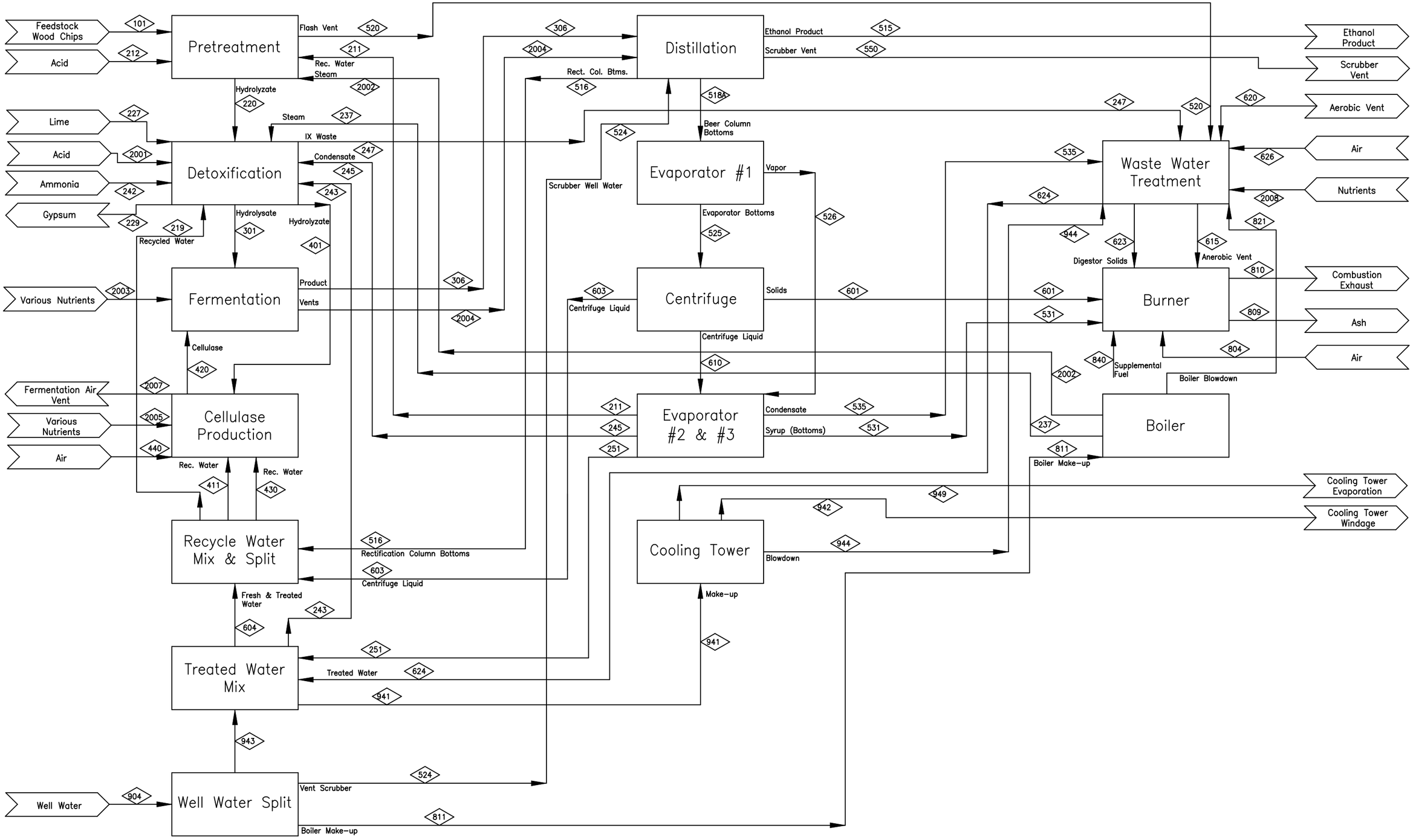

VER	DESCRIPTION	DATE
A	INITIAL ISSUE	5/98
B	NREL YEAR 2000 CASE	10/98
C	DESIGN REPORT	2/99
		LL 2/24/99

NREL NATIONAL RENEWABLE ENERGY LABORATORY
Biotechnology Center For Fuels And Chemicals

SECTION A600
Overall Water Balance

r9901f.xls | PFD-P100-A699 | C

Pretreatment

		Inlets					Outlets			
					2002 = 215 + 216					
COMPONENT	UNITS	101	211	212	215	216	220	520	IN	OUT
Total Flow	kg/hr	159,948	47,518	922	16,907	44,741	224,911	45,124	270,034	270,035
Total Flow	gpm	580	222	1			889			
Insoluble Solids	%	52.1%	0.0%	0.0%	0.0%	0.0%	26.2%	0.0%		
Soluble Solids	%	0.0%	0.3%	0.0%	0.0%	0.0%	9.4%	0.1%		
Percent Water	%	47.9%	98.9%		100.0%	100.0%	62.1%	97.1%		
Water	kg/hr	76,615	47,001		16,907	44,741	139,558	43,810	185,263	183,368

Waste Water Treatment

		Inlets								Outlets					
						2008 = 630 + 631									
COMPONENT	UNITS	247	520	535	626	630	631	821	944	615	620	623	624	IN	OUT
Total Flow	kg/hr	91,967	45,124	13,834	149,904	225	1	6,566	16,488	2,583	152,736	896	167,894	324,109	324,109
Total Flow	gpm	443		64		1	0	44	73			3	743		
Insoluble Solids	%	0.0%	0.0%	0.0%	0.0%	0.0%	0.0%	0.0%	0.0%	0.0%	0.0%	30.0%	0.0%		
Soluble Solids	%	0.0%	0.1%	0.3%	0.0%	0.0%	0.0%	0.0%	0.0%	0.0%	0.0%	0.0%	0.0%		
Percent Water	%	94.9%	97.1%	98.9%				100.0%	100.0%	4.4%	1.6%	69.9%	99.8%		
Water	kg/hr	87,291	43,810	13,684				6,566	16,488	113	2,378	626	167,505	167,839	170,622

Detoxification

		Inlets									Outlets					
					2001 = 233 + 235											
COMPONENT	UNITS	219	220	227	233	235	237	242	243	245	229	247	301	401	IN	OUT
Total Flow	kg/hr	132,211	224,911	715	305	642	2,492	1,128	65,191	29,894	2,437	91,967	343,934	19,151	457,489	457,489
Total Flow	gpm	596	889	1	0	1		8	304	139	6	443	1,407	78		
Insoluble Solids	%	0.2%	26.2%	100.0%	0.0%	0.0%	0.0%	0.0%	0.0%	0.0%	79.9%	0.0%	16.2%	16.2%		
Soluble Solids	%	1.1%	9.4%	0.0%	0.0%	0.0%	0.0%	0.0%	0.0%	0.3%	1.5%	0.0%	6.3%	6.3%		
Percent Water	%	97.0%	62.1%				100.0%		100.0%	98.9%	18.4%	94.9%	76.4%	76.4%		
Water	kg/hr	128,285	139,558				2,492		65,191	29,569	448	87,291	262,611	14,623	365,095	364,973

Burner

		Inlets						Outlets			
COMPONENT	UNITS	531	601	615	623	804	840	810	809	IN	OUT
Total Flow	kg/hr	48,325	98,808	2,583	897	469,285	1	618,601	1,298	619,899	619,899
Total Flow	gpm	213	377		3				3		
Insoluble Solids	%	2.4%	30.5%	0.0%	30.0%	0.0%	0.0%	0.0%	100.0%		
Soluble Solids	%	9.8%	4.4%	0.0%	0.0%	0.0%	0.0%	0.3%	0.0%		
Percent Water	%	79.0%	62.8%	4.4%	69.9%	1.0%		23.3%			
Water	kg/hr	38,167	62,056	113	626	4,693		143,990		43,599	143,990

Fermentation

		Inlets						Outlets				
			2003 = 310 + 310A + 311 + 311A					2004 = 304C + 308				
COMPONENT	UNITS	301	310	310A	311	311A	420	304C	308	306	IN	OUT
Total Flow	kg/hr	343,934	8	584	129	960	39,211	876	16,979	366,970	384,826	384,825
Total Flow	gpm	1,407		3		4	169			1,565		
Insoluble Solids	%	16.2%	0.0%	0.0%	0.0%	0.0%	5.6%	0.0%	0.0%	8.6%		
Soluble Solids	%	6.3%	0.0%	100.0%	0.0%	100.0%	1.7%	0.0%	0.0%	3.1%		
Percent Water	%	76.4%					90.5%	1.7%	1.7%	80.4%		
Water	kg/hr	262,611					35,474	15	288	295,226	298,085	295,529

Boiler

		Inlet	Outlets					
			2002 = 215 + 216					
COMPONENT	UNITS	811	215	216	237	821	IN	OUT
Total Flow	kg/hr	70,748	16,907	44,741	2,492	6,613	70,748	70,752
Total Flow	gpm	312				44		
Insoluble Solids	%	0.0%	0.0%	0.0%	0.0%	0.0%		
Soluble Solids	%	0.0%	0.0%	0.0%	0.0%	0.0%		
Percent Water	%	100.0%	100.0%	100.0%	100.0%	100.0%		
Water	kg/hr	70,748	16,907	44,741	2,492	6,613	70,748	70,752

Cellulase

		Inlets									Outlets				
					2005 = 416 + 417 + 423 + 434 + 436							2007 = 419 + 435			
COMPONENT	UNITS	401	411	430	416	417	423	434	436	440	420	419	435	IN	OUT
Total Flow	kg/hr	19,151	22,766	2,146	580	227	30	8	157	322,922	39,211	307,281	21,494	367,986	367,986
Total Flow	gpm	78	103	10	3	1	0				169				
Insoluble Solids	%	16.2%	0.2%	0.2%	0.0%	0.0%	0.0%	0.0%	0.0%	0.0%	5.6%	0.0%	0.0%		
Soluble Solids	%	6.3%	1.1%	1.1%	69.9%	0.0%	100.0%	0.0%	0.0%	0.0%	1.7%	0.0%	0.0%		
Percent Water	%	76.4%	97.0%	97.0%							90.5%	1.4%	2.3%		
Water	kg/hr	14,623	22,090	2,082							35,474	4,263	501	38,794	40,238

		Trreated Water Mix								Recycle Water Mix and Split							
		Inlets			Outlets					Inlets			Outlets				
										Inlets			Outlets				
COMPONENT	UNITS	251	624	943	243	604	941	IN	OUT	516	603	604	219	411	430	IN	OUT
Total Flow	kg/hr	47,098	167,894	112,929	65,191	81,215	181,370	327,921	327,776	30,943	44,965	81,215	132,211	22,766	2,146	157,123	157,123
Total Flow	gpm	220	743	503	304	359	807			152	199	359	596	103	10		
Insoluble Solids	%	0.0%	0.0%	0.0%	0.0%	0.0%	0.0%			0.0%	0.9%	0.0%	0.2%	0.2%	0.2%		
Soluble Solids	%	0.3%	0.0%	0.0%	0.0%	0.0%	0.0%			0.7%	3.5%	0.0%	1.1%	1.1%	1.1%		
Percent Water	%	98.9%	99.8%	100.0%	100.0%	100.0%	100.0%			96.4%	92.1%	100.0%	97.0%	97.0%	97.0%		
Water	kg/hr	46,586	167,505	112,929	65,191	81,215	181,370			29,822	41,420	81,215	128,285	22,090	2,082		

		Well Water						Cooling Tower					
		Inlet	Outlets					Inlet	Outlets				
COMPONENT	UNITS	904	524	811	943	IN	OUT	941	942	944	949	IN	OUT
Total Flow	kg/hr	196,676	13,042	70,705	112,929	196,676	196,676	181,370	10,655	16,488	154,227	181,370	181,370
Total Flow	gpm	874	57	312	503			807	47	73			
Insoluble Solids	%	0.0%	0.0%	0.0%	0.0%			0.0%	0.0%	0.0%	0.0%		
Soluble Solids	%	0.0%	0.0%	0.0%	0.0%			0.0%	0.0%	0.0%	0.0%		
Percent Water	%	100.0%	100.0%	100.0%	100.0%			100.0%	100.0%	100.0%	100.0%		
Water	kg/hr	196,676	13,042	70,705	112,929			181,370	10,655	16,488	154,227		

Distillation

		Inlets				Outlets					
			2004 = 304C + 308								
COMPONENT	UNITS	306	304C	308	524	515	516	518A	550	IN	OUT
Total Flow	kg/hr	366,970	876	16,979	13,042	18,565	30,943	330,442	17,917	397,867	397,867
Total Flow	gpm	1,565			57	108	152	1,502			
Insoluble Solids	%	8.6%	0.0%	0.0%	0.0%	0.0%	0.0%	9.6%	0.0%		
Soluble Solids	%	3.1%	0.0%	0.0%	0.0%	0.0%	0.7%	3.3%	0.0%		
Percent Water	%	80.4%	1.7%	1.7%	100.0%	0.5%	96.4%	84.3%	1.0%		
Water	kg/hr	295,226	15	288	13,042	92	29,822	278,485	173	308,571	308,572

		Evaporator #1					Centrifuge						Evaporators 2 & 3								
		Inlet	Oultets				Inlets	Outlets					Inlets		Outlets						
COMPONENT	UNITS	518A	525	526	IN	OUT	525	601	603	610	IN	OUT	526	610	211	251	245	531	535	IN	OUT
Total Flow	kg/hr	330,442	278,666	51,776	330442	330442	278,666	98,808	44,965	134,894	278,666	278,667	51,776	134,894	47,518	47,098	29,894	48,325	13,834	186,670	186,669
Total Flow	gpm	1,502	1,213				1,213	377	199	596				596	222	220	139	213	64		
Insoluble Solids	%	9.6%	11.4%	0.0%			11.4%	30.5%	0.9%	0.9%			0.0%	0.9%	0.0%	0.0%	0.0%	2.4%	0.0%		
Soluble Solids	%	3.3%	3.8%	0.7%			3.8%	4.4%	3.5%	3.5%			0.7%	3.5%	0.3%	0.3%	0.3%	9.8%	0.3%		
Percent Water	%	84.3%	81.7%	98.0%			81.7%	62.8%	92.1%	92.1%			98.0%	92.1%	98.9%	98.9%	98.9%	79.0%	98.9%		
Water	kg/hr	278,485	227,738	50,747	278485	278485	227,738	62,056	41,420	124,261	227,738	227,738	50,747	124,261	47,001	46,586	29,569	38,167	13,684	175,008	175,008

Overall Balance

		Inlets																			
					2001 = 233 + 235			2003 = 310 + 310A + 311 + 311A					2005 = 416 + 417 + 423 + 434 + 436								
COMPONENT	UNITS	101	212	227	233	235	242	310	310A	311	311A	440	416	417	423	434	436	904	626	804
Total Flow	kg/hr	159,948	922	715	305	642	1,128	8	584	129	960	322,922	580	227	30	8	157	196,676	149,904	469,324

Overall Balance

		Outlets											
COMPONENT	UNITS	229	419	435	515	550	620	810	809	949	942	IN	OUT
Total Flow	kg/hr	2,437	307,281	21,494	18,565	17,917	152,740	618,601	1,298	155,326	10,731	1,306,305	1,306,390

VER	DESCRIPTION	DATE
A	INITIAL ISSUE	5/98
B	NREL YEAR 2000 CASE	10/98
C	DESIGN REPORT	2/99

LL 2/24/99

NREL NATIONAL RENEWABLE ENERGY LABORATORY
Biotechnology Center For Fuels And Chemicals

SECTION A600
Overall Water Balance

r9901f.xls | PFD-P100-A698 | C

Appendix D

Reasons for Anaerobic / Aerobic Process Selection

APPENDIX D

PHOENIX BIO-SYSTEMS, INC.

at ICM, Inc.:

4800 West 80th Avenue, Suite 202
Westminster, Colorado 80030
Phone: 303/426-7414
Fax: 303/426-7431

310 North First Street, P.O. Box 397
Colwich, Kansas 67030
Phone: 316/796-0900
Fax: 316/796-0092

ANAEROBIC BIO-REACTORS FOR HIGH PERFORMANCE WASTEWATER TREATMENT IN BIOMASS TO ETHANOL OPERATIONS

Industrial Wastewater

Waste "strength" may be measured by five (5) day Biological Oxygen Demand (BOD_5), Chemical Oxygen Demand (COD) or Total Organic Carbon (TOC). Any of these reflect the amount of carbon requiring removal in a given waste water. Chemical Oxygen Demand (COD) describes the amount of oxygen required to completely oxidize all waste (primarily carbon) to CO_2 and is usually used to describe the efficiency of biomethanation.

Waste water streams vary in strength from a few hundred milligrams per liter (mg/l) COD to hundreds of thousands of mg/l COD. Some examples of waste waters are:

TYPE OF WASTE	COD
Municipal Waste Waters	150 - 300 mg/l
Cheese Plant Wash Waters	2,000 - 5,000 mg/l
Cheese Whey	~ 60,000 mg/l
Cheese Whey Permeate	50,000 - 100,000 mg/l
Waste Beer	~ 60,000 mg/l
Brewery Wash Waters	~ 2,000 mg/l
Soft Drink Processing Waste Waters	~ 20,000 mg/l
Potato Processing Waste Water	~ 10,000 mg/l
Vegetable Processing Brine Waste	~ 10,000 mg/l
Oil Operations Waste Water	10,000 - 100,000 mg/l
Winery Waste Water	~ 20,000 mg/l
Can Manufacture (Solvent) Waste	~ 100,000 mg/l

Pharmaceutical Waste Water	10,000 - 100,000 mg/l
Airport Deicer Run-off	10,000 - 300,000 mg/l
Fuel Alcohol Plant Condensate	1,000 - 5,000 mg/l
Distillery Bottoms Water	~ 30,000 mg/l

The list above shows that most industrial waste waters carry far greater organic loading than does municipal sewage. Most of these waste waters are extremely expensive to treat by conventional methods and many industrial manufacturers incur high surcharge costs for discharge to POTW's (Publicly Owned Treatment Works), or in some cases may be banned from public discharge because of the unacceptable loading.

Fuel ethanol operations, whether grain or biomass based, will produce either still bottoms, centrifugate, or evaporator condensate, depending upon the design of the distillery, which will carry high organic waste loads. Centrifuges have been used for the separation of suspended solids from still bottoms, and evaporators have been used for the recovery of most dissolved solids from centrifugate in grain based fuel ethanol plants. In spite of these conservation methods, these plants produce evaporator condensate wastewater, which will usually have COD concentrations of over 1,000 mg/l, and often as high as 5,000 mg/l.

In a biomass-based fuel ethanol plant, non-fermentable solids will be significant, resulting in still bottoms carrying a very high organic load. Even if centrifugation and/or evaporation are applied, wastewater streams from these plants will be very high in COD. In many cases, biomass plants may be located too distant from a POTW for access and in others, loading is likely to be greater than a local POTW can accommodate.

Anaerobic bio-methanation provides a logical and cost-effective means of addressing these wastewaters.

Advantages of Anaerobic Systems

Biomethanation describes the production of biogas by certain micro-organisms using organic (carbonaceous) substances under anaerobic conditions. Biogas consists of a mixture of methane (CH_4) and carbon dioxide (CO_2). The production of methane gas represents a bio-thermodynamic conservation of energy. That is, the energy present in dissolved organic waste is conserved as methane

Figure 1 depicts the metabolic pathways involved in the breakdown of complex organic molecules in the methanogenic conversion process. Three (3) groups of micro-organisms are involved in the methanogenic consortium, hydrolytic bacteria, acetogenic bacteria, and finally, methanogenic bacteria. A number of researchers believe that other micro-organisms, such as sulfate reducing bacteria and hydrogen producing bacteria, may also contribute to the methanogenic consortiums' activity.

Bio-methanation will produce less than ten (10) percent of the waste sludge that is produced by activated sludge or aerobic biological waste water treatment methods. Further, bio-methanation requires only a fraction of the operating horsepower and

facility space. Furthermore, the production of biogas offers an energy source which can be utilized in the operating plant to supplement natural gas.

The attached analysis (Table 1) compares the operating costs of bio-methanation verses conventional aerobic treatment for the same hypothetical wastewater. Note that the horsepower, chemical and sludge management costs for the aerobic treatment system are significantly higher. In addition, the aerobic facility would be much larger and more operator and maintenance intensive. Thus, the application of anaerobic treatment technology provides a significant savings opportunity for the removal of most dissolved organic compounds.

General Anaerobic System Description

Anaerobic bio-methanation is not a new concept in wastewater treatment. This technique has been used for over a century in municipal wastewater plants for the digestion and stabilization of waste sludges. These anaerobic digesters are today known as low-rate solids digesters. Although the same biochemical reactions are employed, the digestion of suspended solids requires a much longer residence time than is required in modern high-rate systems. The slow growing anaerobic consortium is an advantage with respect to sludge (bio-solids) generation, however, in high-rate systems it is necessary to maintain the slow growing culture in a reactor to achieve efficient performance.

The first of these modern technologies, known as upflow anaerobic sludge blanket technology (UASB), was pioneered in the Netherlands in the 1970's. This technique takes advantage of a granulated anaerobic sludge or bio-culture, which remains fixed in the base of a reactor while wastewater containing dissolved organic matter is passed upward through the sludge bed. The success of this technology has led to further refinements in the form of expanded-bed and fluid bed systems. At the same time, packed-bed systems have also been developed, which rely on a matrix of plastic or other heavier-than-water material to act as a surface for colonization by anaerobic cultures. The objective in all these systems is really the same; retain high concentrations of active anaerobic biomass in the reaction zone.

The result of these technological developments is that several manufacturers world-wide, produce and market high-rate anaerobic treatment systems for the removal of dissolved organics from waste water. These high-rate systems operate reliably with hydraulic retention times as low as four (4) hours. Most obtain eighty (80) to ninety-five (95) percent reduction of COD.

A general system flow would include: equalization, recirculated fluid mixing, the anaerobic reactor, nutrient supplementation systems, pH, temperature, and flow control systems, and bio-gas scrubbing, management, and flaring systems.

Diagram 1 represents a general flow for the application of biomethanation and aerobic polishing for a typical fuel ethanol plant. Where COD or BOD_5 are very high and discharge limits are very low for these parameters, both anaerobic and aerobic systems may be required. That is, where more than ninety (90) percent COD reduction is required for discharge, aerobic polishing of the waste water is needed but will be far less expensive as it addresses only a fraction of the original waste load.

Biogas Production

In conventional biomethanation systems, biogas will range from fifty-five (55) to seventy (70) percent methane (CH_4), the remainder being carbon dioxide (CO_2) . Maximum theoretical methane yield is 0.35 liters of methane per gram of COD converted.

In many high-rate systems, methane averages over eighty-five (85) percent in biogas. This is thought to be due to the differences associated with solids digestion and the digestion of dissolved organic compounds. One manufacturer, who uses a proprietary carbon dioxide removal system, routinely reports methane concentrations in-excess of ninety (90) percent.

Most commercial systems utilize emergency flare equipment, which are based upon system pressures. When economically feasible, biogas will be utilized in boilers, natural gas dryers, and sometimes in internal combustion engines to generate electricity. In these cases, emergency flares are only used when biogas production exceeds requirements.

Since these biological systems operate optimally at temperatures between eighty-five (85) and one hundred (100) degrees Fahrenheit, some of the biogas produced may be used to heat the reactors through the use of simple gas fired hot water heaters.

In grain-based fuel ethanol plant applications, where bio-methanators have been used to treat hot (160 to 200° F) evaporator condensate prior to discharge, cooling of the condensate stream is required. In these applications, all of the produced biogas has been used as supplemental spent grain dryer fuel. In biomass based fuel ethanol plants, it is unlikely that spent grain dryers will be employed. Therefore, biogas may be used as supplemental boiler fuel.

COMBINED ANAEROBIC-AEROBIC BIOLOGICAL TREATMENT

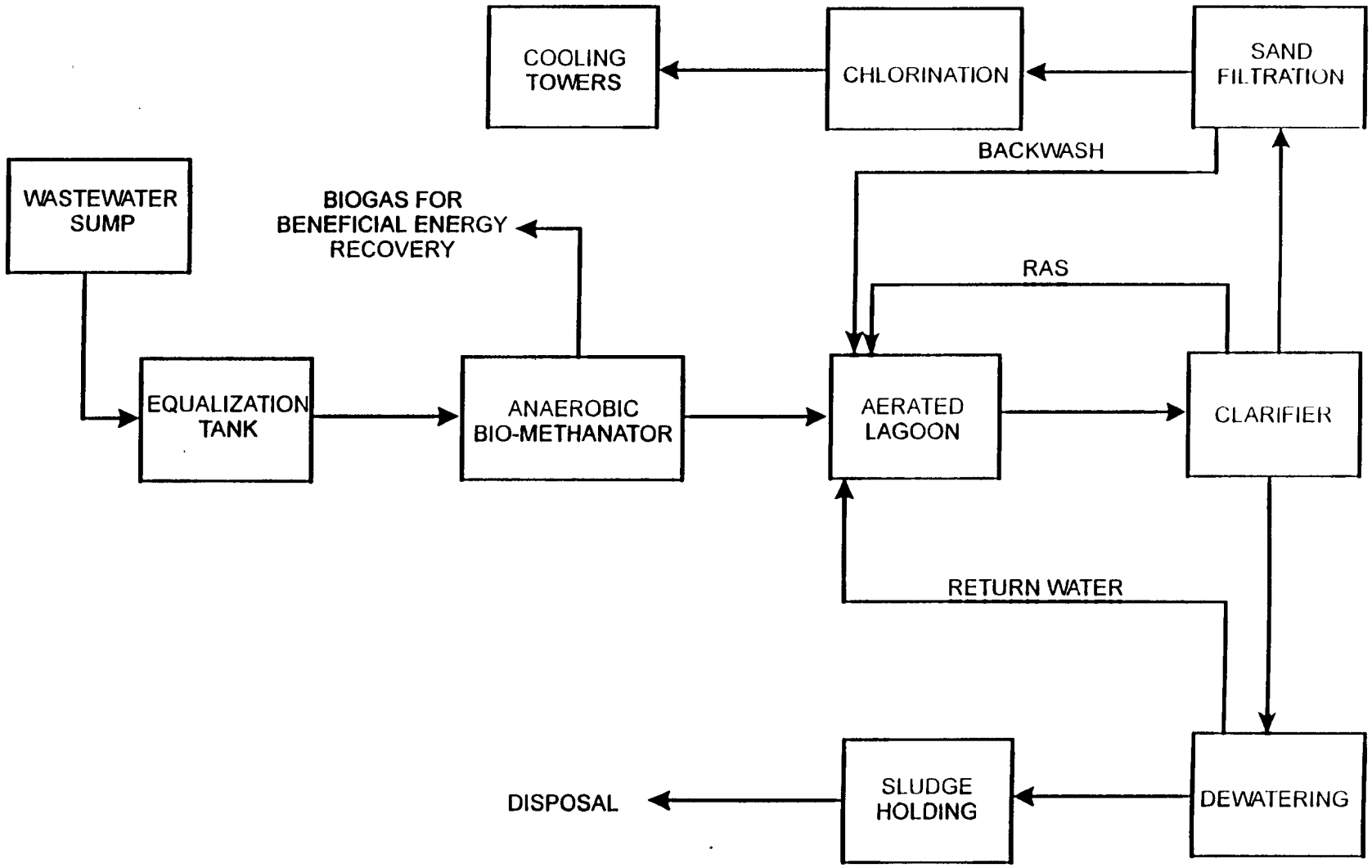

PROCESS FLOW DIAGRAM #1

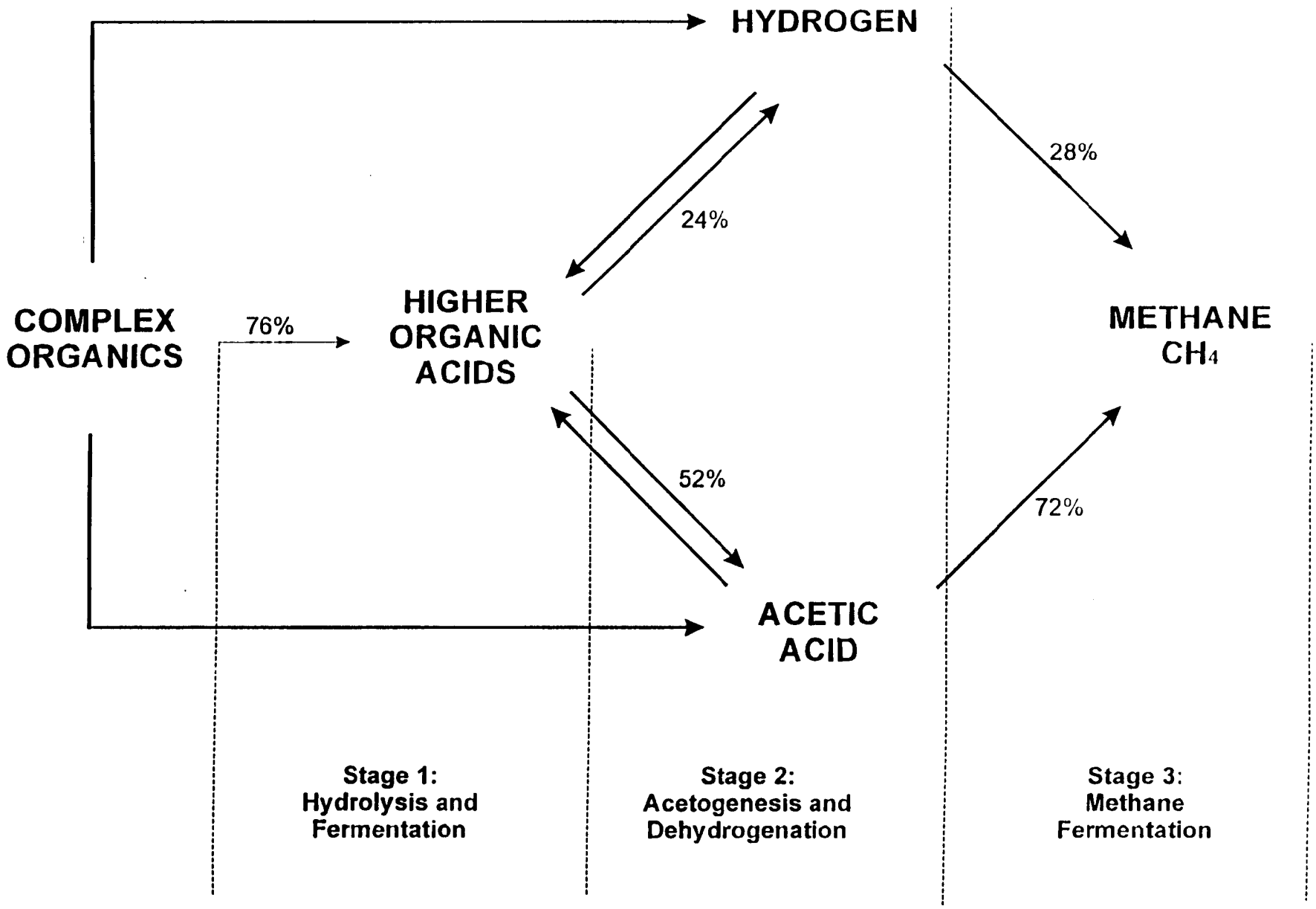

Figure 1 Steps in the anaerobic digestion process

Table 1 - Anaerobic Aerobic Treatment -

Anaerobic Treatment followed by Aerobic Bio-Tower

	ANAEROBIC BIO-METHANATOR		AEROBIC ACTIVATED SLUDGE TREATMENT	
PARAMETERS	**AMOUNTS**	**DAILY COST**	**AMOUNTS**	**DAILY COST**
Flow, Gallons Per Minute (GPM)	300.00		300.00	
Flow, Gallons Per Day (GPD)	432,000.00		432,000.00	
Chemical Oxygen Demand (COD) mg/l	3,000.00		3,000.00	
Biological Oxygen Demand (BOD_5) mg/l	2,100.00		2,100.00	
Pounds Per Day COD	10,804.76		10,804.76	
Pounds Per Day BOD	7,563.33		7,563.33	
Inlet Temperature	25C		37C	
Total Nitrogen mg/l	0.00		0.00	
Total Phosphate mg/l	0.00		0.00	
COD Space Loading Rate g/l/d	12.00		0.75	
COD Reduction	0.90		0.90	
Residual COD mg/l	300.00		300.00	
Horsepower Required:				
Blower Horsepower	3.00		675.30	
Pumping & Other Horsepower	80.00		150.00	
Total Horsepower	83.00		825.30	
Cost per kwh	0.05		0.05	
Kwh per day	1,474.08	$73.70	14,657.28	$732.86
Chemicals Required, lbs/day:				
Nitrogen	29.17	$5.83	388.97	$77.79
Phosphate	9.72	$1.56	129.66	$20.75
Micro-Nutrients	1.62	$0.81	21.61	$6.48
Caustic lbs/day Required	540.24	$102.65	0.00	$0.00
Polymer @ $ 2.50/lb	0.00	$0.00	10.00	$25.00
Chlorine			0.00	$0.00

Table 1 - Anaerobic Aerobic Treatment -

PARAMETERS	AMOUNTS	DAILY COST	AMOUNTS	DAILY COST
Sludge (Biomass) Generation:				
Dry Weight Yield, lbs/day	324.14		4,321.90	
Wet Weight of Sludge, lbs/day	6,482.85		432,190.31	
Sludge Total Solids	5%		1%	
Sludge Yield on COD	3%		40%	
Sludge Disposal :				
Dewatering @ $ 0.XX per 1000 lb wet weight	0.03	$1.94	0.03	$129.66
Volume Reduction	80%		80%	
Disposal Volume	155.28		10,351.86	
Disposal @ $ 0.0X/gal	0.03	$4.66	0.03	$310.56
Bio-Gas Produced (CFD):	55,813.64		0.00	
Methane Yield (85%) CFD	47,441.59		0.00	
Less Heating Requirement	4,000.00			
Net Methane for energy	43,441.59			
Bio-Gas Credit ($2.50/MMBTU Methane)		($108.60)	0.00	$0.00
Labor:				
Cost per hour ($)	12.00		12.00	
Manhours / Day	2.00	$24.00	16.00	$192.00
Maintenance parts	25.00	$30.00	50.00	$60.00
Sewer Surcharge:				
Flow @ $0.XX /1000 gal	0.50	$216.00	0.50	$216.00
Allowable BOD Concentration mg/l	300.00		300.00	
BOD @ $0.XX /lb in excess	0.00	$0.00	0.00	$0.00
Allowable TSS Concentration mg/l	250.00		250.00	
TSS @ $0.XX /lb	0.00	$0.00	0.00	$0.00

Table 1 - Anaerobi[illegible] [illegible]erobic Treatment -

Total Daily Cost		**$352.55**		**$1,771.10**	
Annual Cost (Days per year)	**350.00**	**$123,392.23**	**350.00**	**$619,884.76**	
Net Annual Cost Difference					**$496,492.53**

PARAMETERS	**AMOUNTS**	**AMOUNTS**
Unit Operations Required:		
Equalization Tank (gal)	86,400.00	86,400.00
Main Reactor Size (gal)	108,000.00	1,728,000.00
Clarifier (gal)	N/A	90,000.00

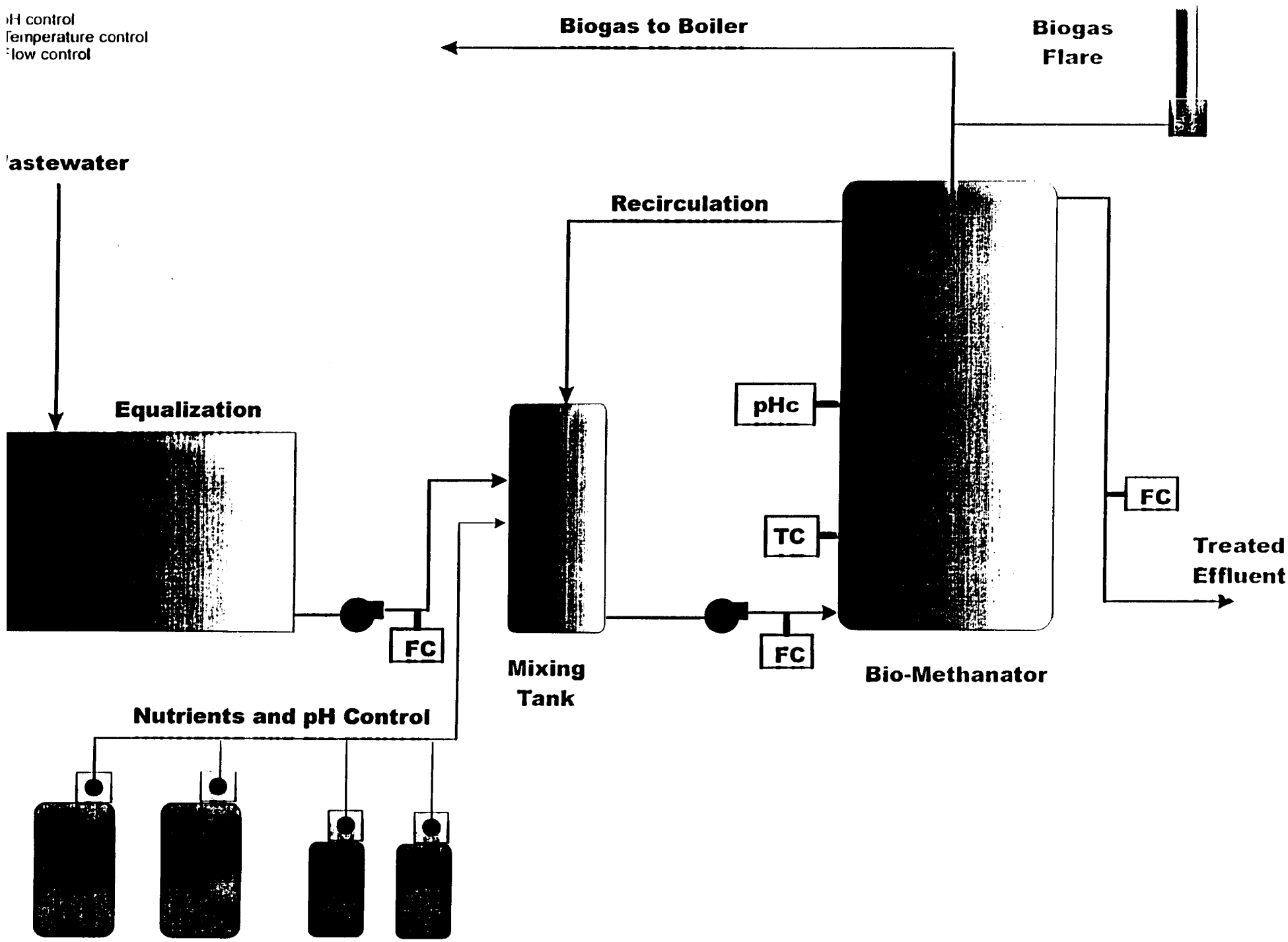
H control
Temperature control
Flow control
Biogas to Boiler
Biogas
Flare
astewater
Recirculation
Equalization
pHc
FC
TC
Treated
Effluent
FC
FC
Mixing
Tank
Bio-Methanator
Nutrients and pH Control

Appendix E

NREL Ethanol Waste Water Treatment

Design Basis for Alternative Waste Water Treatment Systems

		Enzymatic	Softwood	Hardwood
Daily Average Flow	MGD	1	1.4	2.2
Design Daily Peak Flow	MGD	2	2.8	4.4
Design Weekly Peak Flow	MGD	1.8	2.52	3.96
Design Monthly Peak Flow	MGD	1.5	2.1	3.3
Design Annual Peak Flow	MGD	1.25	1.75	2.75

Daily Average TSS

use similar factors for peak flows

Daily Average BOD

Daily Average TKN

Appendix F

Cost Estimates

Equipment Summary								
Eq No.	Eq Description	Drawing	Mat. C	No.	Unit	Total Pur	I Fact	Installed
A-602	Equalization Basin Agitator	A602	SS	1	$28,400	$28,400	1.2	$34,080
A-606	Anerobic Digestor Agitator	A602	SS	4	$30,300	$121,200	1.2	$145,440
A-608	Aerobic Digestor Aerator	A603	CS	16	$31,250	$500,000	1.4	$700,000
A-630	Recycle Water Tank Agitator	A601	CS	1	$5,963	$5,963	1.3	$7,752
C-601	Lignin Wet Cake Screw	A601	CS	1	$31,700	$31,700	1.4	$44,380
C-614	Aerobic Sludge Screw	A603	CS	1	$5,700	$5,700	1.4	$7,980
H-602	Anerobic Digestor Feed Cooler	A602	SS	1	$175,000	$175,000	2.1	$367,500
M-604	Nutrient Feed System	A602	CS	1	$31,400	$31,400	2.58	$81,012
M-606	Biogas Handling System	A602	SS	1	$20,739	$20,739	1.68	$34,842
M-612	Filter Aid Addition System	A603	CS	1	$3,000	$3,000	1.2	$3,600
P-602	Anerobic Digestor Feed Pump	A602	CS	2	$11,400	$22,800	2.8	$63,840
P-606	Aerobic Digestor Feed Pump	A602	CS	2	$10,700	$21,400	2.8	$59,920
P-608	Aerobic Sludge Recycle Pump	A603	SS316	1	$11,100	$11,100	2.8	$31,080
P-610	Aerobic Sludge Pump	A603	SS316	1	$11,100	$11,100	2.8	$31,080
P-611	Aerobic Digestion Outlet Pump	A603	CS	2	$10,700	$21,400	2.8	$59,920
P-614	Sludge Filtrate Recycle Pump	A603	CS	2	$6,100	$12,200	2.8	$34,160
P-616	Treated Water Pump	A603	CS	2	$10,600	$21,200	2.8	$59,360
P-630	Recycle Water Pump	A601	CS	2	$10,600	$21,200	2.8	$59,360
S-600	Bar Screen	A602	CS	1	$111,541	$111,541	1.2	$133,849
S-601	Beer Columns Bottoms Centrifuge	A601	SS316	3	$659,550	$1,978,650	1.2	$2,374,380
S-614	Aerobic Sludge Belt Filter Press	A603	?	1	$650,223	$650,223	1.8	$1,170,401
T-602	Equalization Basin	A602	Concrete	1	$350,800	$350,800	1.42	$498,136
T-606	Anerobic Digestor	A602	Lined or ss	4	$881,081	$3,524,324	1.04	$3,665,297
T-608	Aerobic Digestor	A603	Lined Pit	1	$635,173	$635,173	1	$635,173
T-610	Clarifier	A603	Concrete	1	$174,385	$174,385	1.96	$341,795
T-630	Recycle Water Tank	A601	CS	1	$14,515	$14,515	1.4	$20,321
						$8,505,113	1.25	$10,664,657

Equipment Num	:: A-602
Eqipment Name	:: Equalization Basin Agitator
Associated PFD	:: PFD-P100-A602
Equipment Type	:: FIXED-PROP
Equipment Category	:: AGITATOR
Equipment Description	:: 38 hp each, Fixed Prop, 0.1 hp/1000 gal
Number Required	:: 1
Number Spares	:: 0
Scaling Stream	:: 612
Base Cost	:: 28400.00
Cost Basis	:: ICARUS
Cost Year	:: 1997
Base for Scaling	:: 188129.000
Base Type	:: FLOW
Base Units	:: KG/HR
Install. Factor	:: 1.2000
Install. Factor Basis	:: DELTA-T98
Scale Factor Exponent	:: 0.5100
Scale Factor Basis	:: GARRETT
Material of Const	:: SS
Utility Calc.	:: ASPEN FORT BLCK
Utility Stream	:: WT602
Utility Type	:: POWER
Date Modified	:: 12/21/98
Notes	:: Expected Power Req: 28 kW.

Eq. No.	A-602		
Eq. Name	Equalization Basin Agitator		
Associated PFD	A602		
Stream for Design	612		
Stream Description	Tank Inlet		
Flow Rate	188129	Kg/hr	R9809G
Average Density	0.945	g/CC	R9809G
Flowrate	876	gpm	
Flowrate	52578	gph	
Calculated Tank Vol.	377516	gal	See T-602
Hp Specification	0.1	hp/1000 gal	Assumption
Hp Requirement	38	hp/1000 gal	
Cost ICARUS '97	**$ 28,400**	**SS**	
	$ 27,300	**CS**	
Scaling Stream	612		
Scaling Rate	188129		
Scaling Units	Kg/hr		

A-602 AG - 100 A-602

COMPONENT DATA SHEET

FIXED PROP

CODE OF ACCOUNT: 134

COMPONENT DESIGN DATA:

MATERIAL	SS
DRIVER SPEED	1800.00 RPM
DRIVER POWER	38.00 HP
TOTAL WEIGHT	2600 LBS

COST DATA:

ESTIMATED PURCHASE COST USD 28400.

	MATERIAL USD	MANPOWER USD	MANHOURS	L/M RATIO USD/USD
EQUIPMENT&SETTING	28400.	842.	48	0.030
PIPING	0.	0.	0	0.000
CIVIL	0.	0.	0	0.000
STRUCTURAL STEEL	0.	0.	0	0.000
INSTRUMENTATION	0.	0.	0	0.000
ELECTRICAL	427.	697.	35	1.631
INSULATION	0.	0.	0	0.000
PAINT	0.	0.	0	0.000
SUBTOTAL	28827.	1539.	83	0.053

INSTALLED DIRECT COST 30400. INST'L COST/PE RATIO 1.070

IPE Version: 4.0
Estimate Base: 1st Quarter 1997 (4.0)
June 30, 1997
Run Date: 17NOV98-12:38:36

Equipment Num	:: A-606
Eqipment Name	:: Anaerobic Agitator
Associated PFD	:: PFD-P100-A602
Equipment Type	:: FIXED-PROP
Equipment Category	:: AGITATOR
Equipment Description	:: Fixed Prop, 41 hp, 0.05 hp/1000 gal
Number Required	:: 4
Number Spares	:: 0
Scaling Stream	:: ANEROVOL
Base Cost	:: 30300.00
Cost Basis	:: ICARUS
Cost Year	:: 1997
Base for Scaling	:: 810250.000
Base Type	:: SIZE
Base Units	:: GAL
Install. Factor	:: 1.2000
Install. Factor Basis	:: DELTA-T98
Scale Factor Exponent	:: 0.5100
Scale Factor Basis	:: GARRETT
Material of Const	:: SS
Utility Calc.	:: ASPEN FORT BLCK
Utility Stream	:: WT606
Utility Type	:: POWER
Date Modified	:: 12/21/98
Notes	:: Expected Power Req: 123 kW. SS ESSENTIALLY THE SAME COST AS CS. SCALING TO ASPEN CALIBRATES ANEROBIC DIGESTOR VOLUME

Eq. No.	A-606		
Eq. Name	Anerobic Digestor Agitator		
Associated PFD	A602		
Design Basis	810250	gal	T-606 Individual Volume
Design Basis	0.05	hp/1000 gal	Assumption, based on the fact that there are very little solids to suspend.
Size	41	hp	
Cost Estimate			
Cost ICARUS '97	**$ 30,300**	**SS**	Use because of minor cost differential
	$ 29,100	**CS**	
Scaling Stream	ANEROVOL		Total volume required per vessel, calculated by ASPEN
Scaling Rate	810250		
Scaling Units	gal		
Integer Number Required	INUMANER		Integer Number of Vessels calculated by ASPEN, based on max volume of 950,000 gal per vessel

A-606 AG - 100 A-606

COMPONENT DATA SHEET

FIXED PROP

CODE OF ACCOUNT: 134

COMPONENT DESIGN DATA:

MATERIAL	SS
DRIVER SPEED	1800.00 RPM
DRIVER POWER	41.00 HP
TOTAL WEIGHT	2800 LBS

COST DATA:

ESTIMATED PURCHASE COST USD 30300.

	MATERIAL USD	MANPOWER USD	MANHOURS	L/M RATIO USD/USD
EQUIPMENT&SETTING	30300.	859.	49	0.028
PIPING	0.	0.	0	0.000
CIVIL	0.	0.	0	0.000
STRUCTURAL STEEL	0.	0.	0	0.000
INSTRUMENTATION	0.	0.	0	0.000
ELECTRICAL	427.	697.	35	1.631
INSULATION	0.	0.	0	0.000
PAINT	0.	0.	0	0.000
SUBTOTAL	30727.	1556.	84	0.051

INSTALLED DIRECT COST 32300. INST'L COST/PE RATIO 1.066

IPE Version: 4.0
Estimate Base: 1st Quarter 1997 (4.0)
June 30, 1997
Run Date: 16NOV98-11:31:04

Equipment Num	:: A-608
Eqipment Name	:: Aerobic Lagoon Agitators
Associated PFD	:: PFD-P100-A603
Equipment Type	:: SURFACE-AERATOR
Equipment Category	:: AGITATOR
Equipment Description	:: TWISTER SURFACE AERATOR 50 HP EA
Number Required	:: 16
Number Spares	:: 0
Scaling Stream	:: AEROBCHP
Base Cost	:: 31250.00
Cost Basis	:: VENDOR
Cost Year	:: 1998
Base for Scaling	:: 812.000
Base Type	:: SIZE
Base Units	:: HP
Install. Factor	:: 1.4000
Install. Factor Basis	:: MERRICK98
Scale Factor Exponent	:: 0.5100
Scale Factor Basis	:: GARRETT
Material of Const	:: CS
Utility Calc.	:: ASPEN FORT BLCK
Utility Stream	:: WT608
Utility Type	:: POWER
Date Modified	:: 12/21/98
Notes	:: Expected Power Req.: 605 kW.

Eq. No.	A-608		
Eq. Name	Aerobic Digestor Aerator		
Associated PFD	A603		
Calculated COD	**438**	Kg/hr	Calculated below from R9809G
Caclulated BOD	307	Kg/hr	BOD is 70% of COD, V. Putsche, as reported by J. Rucco
BOD daily	16,204	lb/day	
O2 Requirement	32,408	lb/day	2 lb O2 per lb BOD (Goble Sampson)
hp Requirement	812	hp	Calculation per Goble Sampson
Cost Estimate			
Goble Sampson	$500,000	16 aerators	50 hp each
Scaling Stream	AEROBCHP		
Scaling Rate	812		
Scaling Units	HP		

	Kg/hr	COD Kg/hr	Per R9809G
Mass Flow KG/HR			
Glucose	0.00	0	
Xylose	0.00	1.55434E-08	
Unknown	0.00	0	
Colslds	0.00	0	
Ethanol	3.25	6.78210016	
Arabinose	0.00	0	
Galactose	0.00	0	
Mannose	0.00	0	
Glucose Oligomers	0.00	0	
Cellibiose	0.00	0	
Xylose Oligomers	0.00	0	
Mannose Oligomers	0.00	0	
Galactose Oligomers	0.00	0	
Arabinose Oligomers	0.00	0	
Xylitol	0.00	0	
Furfural	54.04	90.2384834	
HMF	18.21	27.6783336	
Methane	2.49	9.95074	
Lactic Acid	0.05	0.056598506	
Acetic Acid	21.11	22.5878391	
Glycerol	0.00	0.000692483	
Succinic Acid	0.00	5.35041E-05	
Denaturant	0.00	0	
Oil	0.00	6.91765E-06	
Acetate Oligomers	0.00	0	
NH4Acet	245.95	281.1238218	
	345.093	438.4186695	Kg/hr of COD

	Kg COD/Kg	
Glucose	1.07	Per Merrick WWT Report 11/98

Xylose	1.07
Unknown	1.07
Colslds	0.71
Ethanol	2.09
Arabinose	1.07
Galactose	1.07
Mannose	1.07
Glucose Oligomers	1.07
Cellibiose	1.07
Xylose Oligomers	1.07
Mannose Oligomers	1.07
Gaactose Oligomers	1.07
Arabinose Oligomers	1.07
Xylitol	1.22
Furfural	1.67
HMF	1.52
Methane	4
Lactic Acid	1.07
Acetic Acid	1.07
Glycerol	1.22
Succinic Acid	0.95
Denaturant	3.52
Oil	2.89
Acetate Oligomers	1.07
NH4Acet	1.143

GOBLE SAMPSON ASSOCIATES

☐ ARIZONA
309 East 10th Drive
Mesa, AZ 85210
(602) 969-3867
(602) 969-4096 FAX

☒ COLORADO
7076 S Alton Way
Building F
Englewood, CO 80112
(303) 770-6418
(303) 770-6424 FAX

☐ MONTANA
1520 Third St NW
C-107
Great Falls, MT 59404
(406) 965-2536
(406) 965-2520 FAX

☐ NEW MEXICO
4004 Carlisle Blvd NE
Suite J
Albuquerque, NM 87107
(505) 881-8718
(505) 881-9055 FAX

☐ OREGON
19210 SW Martinazzi Ave
Suite 122
Tualatin, OR 97062
(503) 692-4172
(503) 692-1669 FAX

☐ UTAH
3500 S Main St
Suite 200
Salt Lake City, UT 84115
(801) 268-8790
(801) 268-8792 FAX

☐ WASHINGTON
1420 NW Gilman Rd
Suite 2161
Issaquah, WA 98027
(425) 392-0491
(425) 392-9615 FAX

LETTER OF TRANSMITTAL

TO Merrick

Date 11/20/98

Your #

GSA #

Attention Dick Volles

Re: NREL

WE ARE SENDING YOU the following items: ☒ Attached ☐ Under separate cover

☐ Shop drawings ☐ Submittals ☐ Plans ☐ O & M Manuals
☒ Copy of letter ☐ Purchase order ☐ Specification ☐ Other

Copies	Date	No.	Description
1			Aeromix Proposal

THESE ARE TRANSMITTED as checked below:

☒ For your use ☐ Approved as submitted ☐ Resubmit ☐ copies for approval
☐ As requested ☐ Approved as noted ☐ Submit ☐ copies for distribution
☐ For approval ☐ Returned for corrections ☐ Return ☐ Corrected prints
☐ For review and comment ☐ For signature ☐ Other

REMARKS Due to the elevated loading requirements we have changed aerator design. The "Twister" is a low speed surface aerator that has better x-fer eff's.

Copy to file.

SIGNED Steve Hansen

A FAX TRANSMITTAL FROM:

"Specialists in Aeration and Mixing Equipment"

AEROMIX Systems, Inc.
2611 N. Second Street, Minneapolis, MN 55411
Phone: 612 / 521-8519 • Toll free: 800 / 879-3677 • fax: 612 / 521-1455
Visit us on the internet at www.AEROMIX.com

TO: Steve Hansen	FROM: Todd Jacobs, Sales Engineer
COMPANY: Goble Sampson Associates	DATE: November 20, 1998
FAX NUMBER: 303/770-6424	TOTAL NO. OF PAGES INCLUDING COVER: 3
PHONE NUMBER: 303/770-6418	SENDER'S PHONE NUMBER: 612 / 521-8519
REGARDING: NREL	SENDER'S FAX NUMBER: 612 / 521-1455

☐ URGENT ☒ FOR REVIEW ☐ PLEASE COMMENT ☐ PLEASE REPLY ☒ PLEASE RECYCLE

Steve,

Per the attached calculations, they need about 800 horsepower to meet the oxygen demand using the TWISTER Slow Speed Surface Aerator. This is the most efficient mechanical aerator made in terms of oxygen transfer. I recommend installing 16 each 50 hp TWISTER Aerators in the first cell. A complete mix should be maintained along with a minimum of two parts per million residual oxygen level. Please note that this sizing is based upon BOD, not the list of contaminants you sent me.

Budget price for 16 each 50 hp TWISTER float mounted slow speed aerators is $500,000.

Call with questions.

Sincerely,

Todd Jacobs

The information contained in this facsimile is intended for use only by the person addressed above and shall not be used by any other party for any reason. Any party reviewing this fax is obligated to keep any and all information confidential which is listed as confidential.

Please call 800 / 879-3677 or 612 / 521-8519 if you do not receive all pages or experience difficulty receiving this transmittal.

AERATOR SIZING CALCULATIONS FOR:
National Renewable Energy Lab

Date: 11/20/98

Design Criteria

To convert from mg/l to lbs/day use the following equation:
mg/l x 8.34 lb / 1,000,000 x Daily flow (MGD)

Flow :	1.17	Million Gallons per Day		
BOD demand :	1660	mg/l converts to:	16198	lbs/day
Total Sus Solids:	200	mg/l converts to:	1952	lbs/day
TKN :	0	mg/l converts to:	0	lbs/day

The pond volume is found using the following equation:

V = D/3 (As + Ab + squareroot(As * Ab))
Where:

As = surface area D = water depth
Ab = bottom area V =cell volume in cu.ft.

Detention time is found by dividing volume by daily flow.

	Cell 1		Cell 2		Cell 3	
Width:	300.00	ft.	150.00	ft.		ft.
Length:	600.00	ft.	300.00	ft.		ft.
Depth:	15.00	ft.	12.00	ft.		ft.
Volume:	2129726	cu.ft.	418856	cu.ft.	0	cu.ft.
Capacity:	15930352	Gal	3133043	Gal	0	Gal
Det.time:	13.62	Days	2.68	Days	0.00	Days

Oxygen required for BOD removal

For this application we are using: 2.00 lbs of O2 for each pound of BOD per day (under working conditions). A residual oxygen level of 2.00 mg/l should be maintained in the pond at all times.

BOD Oxygen requirement calculation.

16198 lbs of BOD/day x 2.00 lb of O2/lb BOD = 32396 lb O2/day

TKN Oxygen requirement calculation:

0 lbs of TKN/day x 4.60 lb of O2/lb TKN = 0 lb O2/day

Total Oxygen required per day is the total of the BOD and TKN demands.

32396 lbs/day + 0 lbs/day = 32396 lbs O2 (under field conditions

AERATOR SIZING CALCULATIONS FOR:
National Renewable Energy Lab

Oxygen transfer rates for aerators are reported under standard conditions. In order to make proper comparisons under field conditions, Total Oxygen Requirement (TOR) should be converted to Standard Condition Total Oxygen Requirment (STOR). Conversion from field conditions can be accomplished with the following equation:

$$No = \frac{N}{\frac{Beta * Cwalt - Cl}{9.17} * Alpha * 1.024^{(T-20)}}$$

Where:

No = STOR lbs/day	
N = TOR lbs/day =	32395.90
Beta = Salinity, surface tension factors =	0.95
Cwalt = Saturation at given altitude and temp =	9.10
Cl = Residual oxygen mg/l =	2.00
Alpha = Oxygen transfer correction factor =	0.85
T = Operating temperature (degrees C)	20

$$= \frac{32395.90}{\frac{(0.95 * 9.10) - 2.00}{9.17 \text{ mg/l}} * 0.85 * 1.024^{0}}$$

= 52595 lbs of O2/day

At Std. conditions the TWISTER transfers up to 3 lbs O2/Hp-hr. For this system we are using a transfer rate of 2.70 lb O2/Hp-Hr.

Oxygen Hp = 52595.12 lbs-day / 64.80 lbs/Hp-day = 811.65 Hp

TWISTER™

Low Speed Surface Aerator

Highest Oxygen Transfer.

The proven TWISTER™ Low Speed Surface Aerator provides unmatched oxygen transfer rates, quality, and long lasting performance. These solidly built aerators use a partially submerged rotating turbine to effectively stir the basin while creating intense air-to-water mixing, resulting in high oxygen transfer. TWISTER™ Aerators feature:

* Strongly built gearbox with a safety factor of two or more
* Super resistant FRP rotor, uniquely shaped to maximize performance
* Fixed or float mounting

Typical TWISTER™ Low Speed Aerator on floats

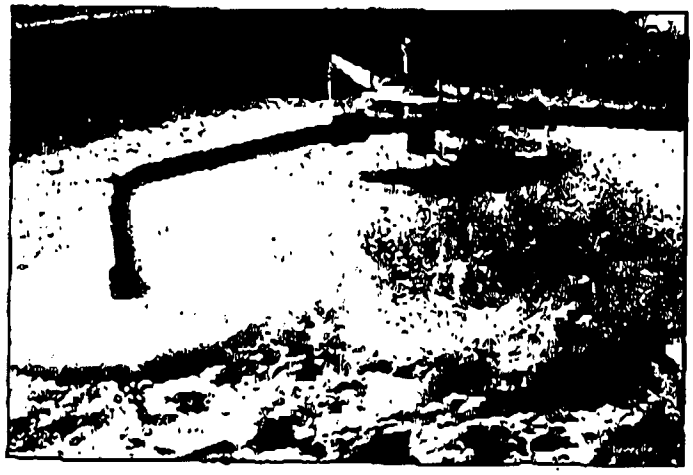

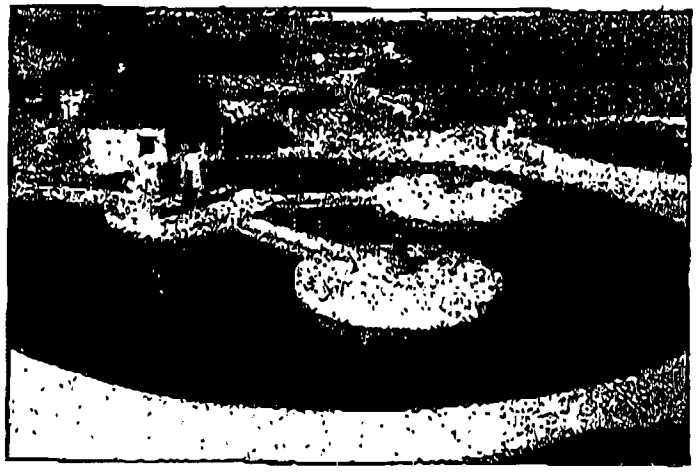

Typical Twister Low Speed Aerator fixed mounted

Reduced Maintenance.

All shafts, couplings, gearbox's and support apparatus are oversized to reduce wear, vibration, and long term maintenance. The rotor is specially shaped and has proven to throw off debris and prevent ice build-up. It includes an adjustable base plate for level proper adjustment.

Extensive Applications.

TWISTER™ Low Speed Surface Aerators add oxygen and mixing in a wide range of applications, including:

* Wastewater Treatment
* Leachate Treatment
* Supplemental Aeration
* Sequencing Batch Reactors

AERONIX

"Specialists in Aeration and Mixing Equipment"

Power Output HP / KW	3 / 2.2	5 / 4	7.5 / 5.5	10 / 7.5	15 / 10	20 / 15	25 / 18.5	30 / 22	40 / 30	50 / 37	60 / 45	75 / 55	100 / 75	125 / 90	150 / 110
Rotor rpm (60 or 50 Hz power)	78	97	110	133/60	70	75	77	61	70	70	70	<<<<<<<approximately 70>>>>>>>			
Min. Basin Dia. (feet/meters)	16/5	16/5	23/7	23/7	30/9	34/10.5	34/10.5	39/12	39/12	39/12	49/15	49/15	59/18	69/21	79/24
Complete Mix Dia. (ft/mtrs)	39/16	45/13	48/15	59/18	66/20	75/23	79/24	85/26	93/28	102/31	108/33	118/36	131/40	144/44	157/48
Oxygen Dispersion Zone (ft/mtrs)	92/30	118/36	141/43	164/50	184/56	213/65	230/67	239/73	263/80	293/89	302/92	354/108	370/113	403/123	440/134
Max Liquid Level Variation (in/cm)	3.1/8	3.1/8	3.1/8	3.1/8	3.9/10	3.9/10	3.9/10	3.9/10	3.9/10	3.9/10	3.9/10	3.9/10	7.9/20	7.9/20	7.9/20
Spray Diameter (feet/meters)	13/3.8	13/3.8	14/4.2	14/4.2	15/4.5	18/5.4	18/5.4	18/5.4	22/6.6	22/6.6	22/6.6	22/6.6	25/7.5	28/8.5	28/8.5
Minimum Liquid Level (ft/mtrs)	4.9/1.5	4.9/1.5	4.9/1.5	4.9/1.5	5.9/1.8	5.9/1.8	5.9/1.8	5.9/1.8	7.9/2.4	7.9/2.4	7.9/2.4	7.9/2.4	7.9/2.4	7.9/2.4	7.9/2.4
Oxygen Transfer - SAE motor	2.7 to 3.2 pounds per horsepower hour / 1.7 to 1.8 kgs per kw hour (all per ASCE)														
Approximate Weight (pounds)	396	440	528	618	1100	1650	2200	3000	3500	3520	3520	3960	5940	6200	8800
Approximate Weight (kgs)	180	200	240	280	500	750	1000	1400	1600	1600	1600	1800	2700	3000	4000

Notes:

All numbers are approximate.
Actual performance may vary.
All data subject to change.
Rotation speeds may vary 3 to 5 rpm depending on installation.

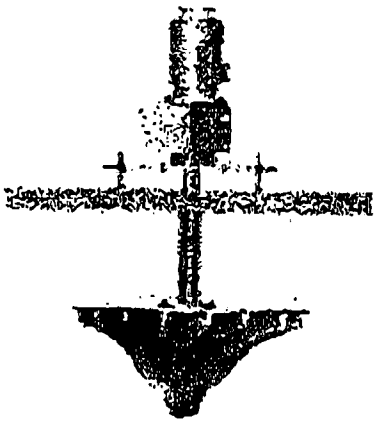

Aeration Knowledge. Wide Range Of Products.

AEROMIX is your aeration expert. We offer all major wastewater aeration technologies and the expertise to help you select and apply the equipment best suited for your application. Let our technical experts assist you in proper sizing, layout, and operation of your aeration system.

AEROMIX Systems, Inc.
2611 No. Second Street
Minneapolis, MN 55411 U.S.A.

Ph: 800/879-3677, 612/521-8519
Fax: 612/521-1455
e-mail: aeromix@aeromix.com
web site: www.aeromix.com

Rental units available.

© 1998, AEROMIX Systems, Inc.

```
Equipment Num        :: A-630
Eqipment Name        :: Recycled Water Tank Agitator
Associated PFD       :: PFD-P100-A601
Equipment Type       :: FIXED-PROP
Equipment Category   :: AGITATOR
Equipment Description:: 5 hp, 50 rpm,
Number Required      :: 1
Number Spares        :: 0
Scaling Stream       :: 602
Base Cost            :: 5963.00
Cost Basis           :: VENDOR
Cost Year            :: 1998
Base for Scaling     :: 179446.000
Base Type            :: FLOW
Base Units           :: KG/HR
Install. Factor      :: 1.3000
Install. Factor Basis:: DELTA-T98
Scale Factor Exponent:: 0.5100
Scale Factor Basis   :: GARRETT
Material of Const    :: CS
Utility Calc.        :: ASPEN FORT BLCK
Utility Stream       :: WT630
Utility Type         :: POWER
Date Modified        :: 12/10/98
Notes                :: Expected Power Req: 4 kW.
```

Eq. No.	A-630			
Eq. Name	Recycle Water Tank Agitator			
Associated PFD	A601			
Stream for Design		602		
Stream Description		Primary Inlet		
Flow Rate		179446	Kg/hr	R9809G
Average Density		0.999	g/CC	R9809G
Flowrate		790.7	gpm	
T-630 Calc. Tank		15813	gal	
Vendor Quote	$	5,442		
		5	hp	
		13218	gal	Tank Volume for Agitator Quote
		0.92	hp/1000 ga	Back Calculated
Scaling Exponent		0.51		
Cost Estimate	**$**	**5,963**	**1998**	
Scaling Stream		602		
Scaling Rate		179446		
Scaling Units		Kg/hr		

A-630 Water tank agitator

12'φ x 18' tall tank

1.3% insol. solids

4.9% Sol. Solids

91% H_2O

To Suspend solids

Jim Kassian
8-26-98

SVEDALA

Pumps & Process

SVEDALA PROPOSAL

SVEDALA Proposal No. 810306 Rev 0	**DATE PROCESSED: August 26, 1998** **by Jim Puliafico**
Project: **Merrick** **WWT Agitator**	**Terms:** **Per Svedala Standard Terms & Conditions**

Svedala Pumps & Process Open-Agitator custom designed for use with a vertical cylindrical tank, 15 Ft diameter by 12 Ft straight-side high, with an open top and flat bottom. The mixer is designed to produce moderate agitation to suspend solids. The material agitated is a dilute slurry having a specific gravity of 1.03 and a viscosity of 3 cP. The slurry is made up of 3.5% by weight solids with a dry solids specific gravity of 2.8. The particle size distribution used is: d99=45, d80=15 and d50=8 microns.

The agitator is to be mounted on 15 inches high beams, mounted on tank centerline with full baffles. A square mounting plate is included to facilitate mounting of the agitator to the beams. The tank, baffles and agitator support structure are supplied by the customer.

The agitator consists of the following components:

- One propeller per shaft, 60 inch diameter, 4-blade MIL high efficiency propeller, bolted blade design, constructed of carbon steel. The prop will operate at a rotational speed of 50 rpm, resulting in a tip speed of 785 fpm. Prop is located31 in from tank floor to prop centerline.
- A 2.5 inch Schedule 80 pipe shaft constructed of carbon steel. A rigid coupling half is welded to the shaft for attachment to the reducer coupling half. For prop attachment, a hub plate is welded to the shaft. Shaft is approximately 126 inches long.
- Speed reducer, cycloidal gear, totally enclosed running in grease, Sumitomo Model No. CVVJS-4155-Y-35, ratio 35:1, with output shaft coupling half, C-Face mount motor adapter input and motor coupling.
- 5 HP motor, 1750 Rpm, 230/460V/3ph/60Hz, high efficiency, corrosive duty 184TC frame with drip cover.

Estimated weight each 520 Lbs

Unit Price: $5,442.00 FOB Colorado Springs, CO

```
CUSTOMER  ------------------------------------------------------------------
          Customer: Merrick                          PC#: 810306-1 Item#: 001
          Agitator Tag Number      :                           Date: 26Aug98
PROCESS   ------------------------------------------------------------------
          Service Description      : WWT Holding Tank                      >
          Temperature & Pressure   : 100 <degF>  &  Atmospheric Pressure   >
          Final Mixture Viscosity  : 2.8                          <cP @ 5s^-1>
          Sp. Gr. of Mixture       : 1.028                            <g/cm3>
          Sp. Gr. of Liquid        : 1.000          (1 cP)            <g/cm3>
          Sp. Gr. of Dry Solids    : 2.800                            <g/cm3>
          Weight % Solids          : 3.5                               <%w/w>
          Solids Settling Vel. d99 : 0.50 Free      0.22 Hindered       <Fpm>
          Particle Size Distributn : d99=45   d80=15   d50=7.5          <um>
TANK      ------------------------------------------------------------------
          Tank Diameter x Height   : 180 Diameter x 144 Str.Side      <inxin>
          Top / Bottom Geometry    : Flat / Flat                       <in/in>
          Volume Agitated          : 13220   to  13220              <Gallons>
          Liquid Level Range       : 120     to  120                     <in>
          Baffle Recommendation    : 4 @ 90 Deg. 15 Wide x 112.5 Long    <in>
          Tank Operation           : Continuous Flow w Bottom Draw-Off     >
AGITATOR  ------------------------------------------------------------------
          Agitator Model (Qty=1)   : Custom Agitator by Svedala Industries >
          Agitator Shaft Seal      : No Shaft Seal is Used                 >
          Mounting Type and Height : On 15 in Beams with 1 in Bed-Plate    >
          No. of Impellers         : One (1) Single Impeller             < - >
          Impeller Style Used      : MIL                                 < - >
          Number of Blades         : 4 Bolted Blades                     < - >
          Impeller Diameter        : 60                                 < in >
          D/T Ratio                : 0.333                               < - >
          Operating Speed          : 50                                 <Rpm>
          Power Used By Turbines   : 1.7                                 < HP >
          Tip Speed                : 785                             <Ft/min>
          Annular Velocity Vup     : 19.9                            <Ft/min>
          Other Agitation Scales   : 1.56 Ft2/s2  3.54 Fpm/6  106 Turns/hr  >
          Total Impeller Pumping   : 23380                               <gpm>
          Agitator Function        : Solid Suspension                      >
SHAFT     ------------------------------------------------------------------
          Gear Box Shaft (Upper)   : 1.875 Dia.x 3.8 Long from Mtg.Ref.  <in>
          Pipe Shaft     (Lower)   : 2.875/2.323D.(2.5 Sch80) x 126 Long <in>
          Total Length / Coupling  : 128.7 Total / Removable/Pipe      <in/?>
          Turbine Dist to Mtg.Ref. : 129                               < in >
          Turbine Off-Bottom Dist. : 31                                < in >
          Weight of Impeller       : 174                                <Lbs>
          Gear Box Shaft Stress    : Shear= 5835     Tensile= 9051      <psi>
          Pipe Shaft Stress        : Shear= 2796     Tensile= 4305      <psi>
          Hydraulic Safety Factor  : 3.00                               < - >
DRIVE     ------------------------------------------------------------------
          Speed Reduction          : Sumitomo Cycloidal Gear w C-Face Motor >
          Reducer Model            : CVVJS-4155-Y-35 Standard              >
          Gear Drive Ratio         : 35.000: 1   Single Reduction      < R:1 >
          Gearbox Service Factor   : 1.52                             <HP/HP>
          Low Speed Bearing Life   : Upper= 78900   Lower= 599200   <B10 h/h>
MATERIALS ------------------------------------------------------------------
          Impeller Matl/Cover      : C/S / No Cover                        >
          Upper Shaft Material     : 4140 High Strength Steel              >
          Lower Shaft Matl/Cover   : C/S / No Cover                        >
LOADS     ------------------------------------------------------------------
          DESIGN LOADS:  (*)=APPROPRIATE SERVICE FACTOR APPLIED ALREADY
          Bending Moment (* 1.8SF) : 7455                           <in-Lbf>
          Torque  Moment (* 2.0SF) : 12605                          <in-Lbf>
          Downward Load  (* 2.0SF) : 1040                              <Lbf>
          First Critical Speed     : 103.9   ( 0.48 Ratio )        <Rpm/(-)>
WEIGHTS   ------------------------------------------------------------------
          Weight of Agitator Drive : 124                               < Lbs >
          Weight of Motor          : 110                               < Lbs >
          Weight of Wet-End        : 286                               < Lbs >
          Total Weight of Agitator : 520                               < Lbs >
MOTOR     ------------------------------------------------------------------
          Motor Power / Rpm        : 5 / 1750  (230/460V/3/60Hz)      <HP/Rpm>
          Total Power Used         : 2.13    (43 % of Nameplate)        < HP >
```

DESIGN LOADS:

DRAWN TO SCALE

BENDING MOMENT:	7490	in-Lbf
TORQUE REACTION:	12610	in-Lbf
DOWNWARD LOAD:	990	Lbf
CRITICAL SPEED:	113	RPM

Above Loads Include An Appropriate Safety Factor

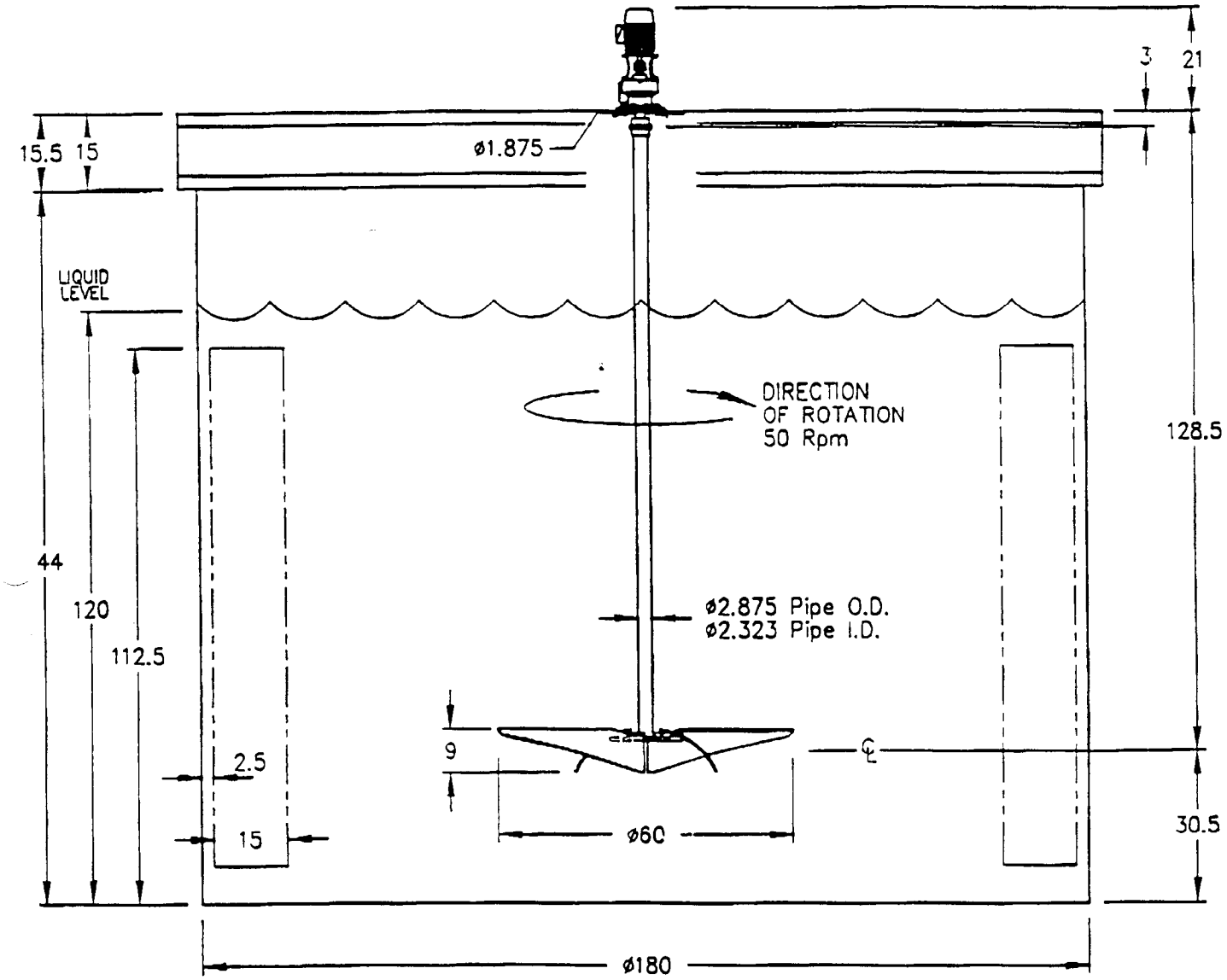

NOTE:

1. Dimensions in inches (in)
2. Motor: 5 HP at 1750 Rpm, Frame 184TC
3. V-Belt Drive: No Belts Are Used
4. Gear Reducer: Sumitomo CVVJS-4155-Y-35 Standard, Ratio 35:1, Gear S.F.=1.52, Cycloidal Gear, Grease Lubricated.
5. Seal: No Shaft Seal is Used
6. Shaft: One (1) Piece Extension Shaft 125.5 in Long, made from 2-1/2" Schedule 80 pipe.
7. Turbines: (1) ø60 in Diameter MIL Propeller with 4 Bolt-on Blades.
8. Process Slurry: 1.028 SpGr Mixture with 3.5%w/w Solids, 1.000 Liquid SpGr, 2.800 Solids SpGr, Maximum Particle Size 45 microns. No gas is added.
9. Wetted Parts: Carbon Steel

SVEDALA

Svedala Pumps & Process Industries

Agitators

LOCATION DRAWING
Merrick, Denver CO
WWT Holding Tank

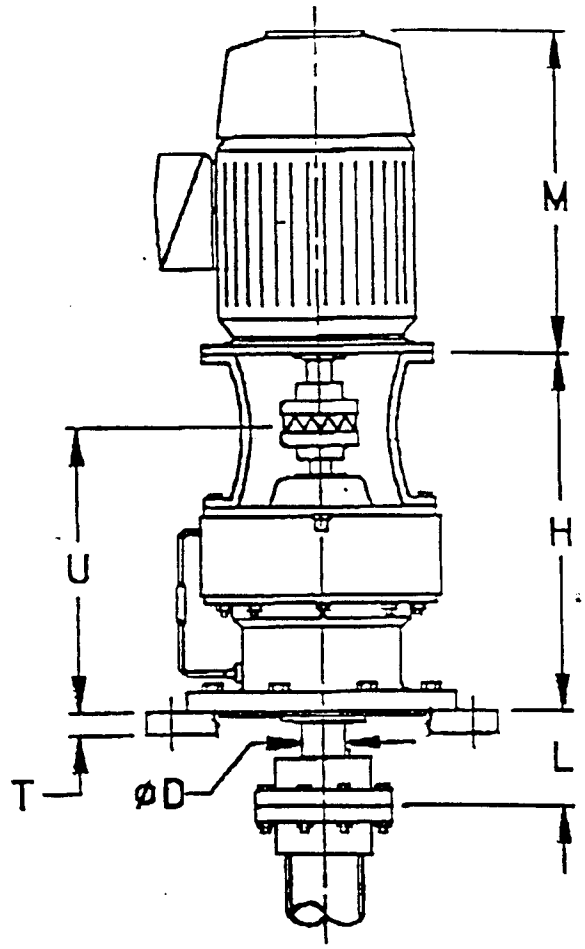

MOTOR DATA
- Power _____
- Rpm _____
- Frame _____
- Electricity _____

SPEED REDUCER DATA
- Mfgr _____
- Model _____
- Ratio _____
- Service Factor _____

DIMENSIONS
- M _____
- H _____
- L _____
- ØD _____
- T _____
- U _____
- N _____
- ØB _____
- ØQ _____
- ØR _____
- W _____
- X _____
- ØY _____

DRIVE WEIGHT: _____

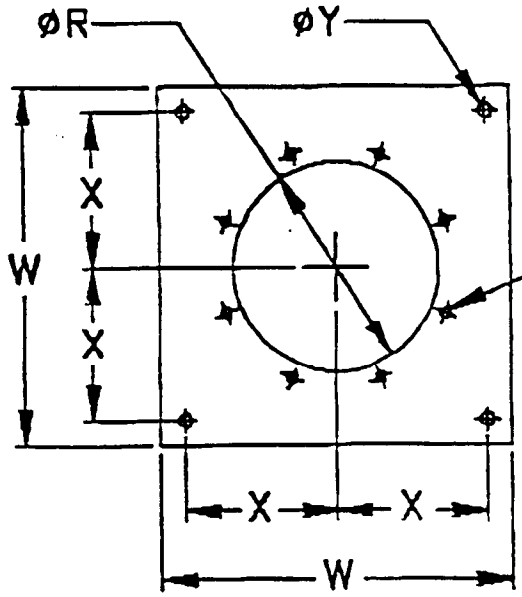

SM–Cyclo Mount:
N Holes on a
ØB Bolt Circle
ØQ Holes

Optional Bed Plate.

SVEDALA	Svedala Pumps & Process Industries Agitators
SM–Cyclo Agitator Drive Motor Direct Connected Beam Mounted	
Rev.: Date:	Dwg. No.:

SM-Cyclo 4000 Series Features:

The smaller Svedala/Denver agitators often utilize the Sumitomo Cyclo speed reducer with the motor either directly connected or through a low ratio belt drive. A belt drive input to the reducer permits low cost speed flexibility should the process conditions change. The reducer service factor is based on the motor nameplate power rather than transmitted power. All SM-Cyclo speed used for agitator service are grease filled to guard against catastrophic lubrication oil loss through the lower bearing seals. The low speed B-10 bearing life are always calculated and are a minimum of 50,000 hours. Spare parts can be obtained directly from Sumitomo or through Svedala.

The SM-Cyclo is manufactured by Sumitomo Machinery who have had over 25 years of experience in building this unique speed reducers. Worldwide service is readily available through a network of regional offices and service technicians.

The SM-Cyclo reducer does not use any gears to achieve speed reduction; rather the design utilizes an eccentric cam, cycloidal discs, ring gear pins with rollers, and a low speed shaft with multiple roller pins. All torque transmitting parts roll with at least 2/3rds of the teeth engaged at any time. This contrasts with worm and bevel gearing which slide and helical and bevel gear teeth which have only a few teeth engaged at any time. As a result, no wear failures have every occurred with the Cyclo drive in over five million installations since 1939. Furthermore, the SM-Cyclo reducer can withstand over 500% shock load, the highest overload capacity of any speed reducer. The SM-Cyclo can quietly achieve 87:1 reduction in a single stage and still maintain 95% efficiency because all components roll. The transmission components are produced using 52100 high-carbon chromium bearing steel through-hardened and tempered to Rockwell C57 to C63. Using no gears, AGMA guidelines are meaningless.

Housings are manufactured from high-quality cast iron, built to withstand severe external loads. Grease filled reducers are specified by Svedala/Denver to ensure a long trouble-free life. Low speed shafts are manufactured from high alloy high strength steel (4140). Low speed shafts use either ball bearings of spherical roller bearings. Svedala/Denver works closely with the Sumitomo manufacturing to ensure the bearing life exceeds our minimum of 50,000 hours B-10 life with special attention given to the low speed bearings. In certain models, high capacity bearings are readily substituted for the standard bearings often resulting in a B-10 bearing life exceeded 100,000 hours.

Equipment Num	:: C-601
Eqipment Name	:: Lignin Wet Cake Screw
Associated PFD	:: PFD-P100-A601
Equipment Type	:: SCREW
Equipment Category	:: CONVEYOR
Equipment Description	:: 14" DIA X 100' LONG
Number Required	:: 1
Number Spares	:: 0
Scaling Stream	:: 601
Base Cost	:: 31700.00
Cost Basis	:: ICARUS
Cost Year	:: 1997
Base for Scaling	:: 99199.000
Base Type	:: FLOW
Base Units	:: KG/HR
Install. Factor	:: 1.4000
Install. Factor Basis	:: DELTA-T98
Scale Factor Exponent	:: 0.7800
Scale Factor Basis	:: GARRETT
Material of Const	:: CS
Utility Calc.	:: ASPEN FORT BLCK
Utility Stream	:: WC601
Utility Type	:: POWER
Date Modified	:: 12/22/98
Notes	:: 85 hp (63 kW) specified by Icarus.

Eq. No.	C-601		
Eq. Name	Lignin Wet Cake Screw		
Associated PFD	A601		
Stream for Design	601		
Stream Description	Conveyor Inlet		
Flow Rate	99199	Kg/hr	R9809G
Average Density	0.99		
Frac Solids	0.303		
Density	61.8	lb/ft^3	
Flowrate	3532.7	cfh	Full Flow to Burner
Flow (tons/h)	109.1		
Design Basis	14	in. dia	Perry 5th, P. 7-7, Table 7-5, Max RPM, 45% Full
	4000	cfh	rated capacity
	100	ft. length	Assume its fairly close to the boiler
1/3 from Individual Separators	1178	cfh	per individual separator
	9	in. dia	Perry 5th, P. 7-7, Table 7-5, Max RPM, 45% Full
	1200	cfh	rated capacity
	15	ft. length	Assume its fairly close to the boiler
Cost Estimation			
Icarus 1997	**$ 21,900**	14" x 100'	1 unit
	$ 9,800	9" x 15'	2 units
	$ 31,700	Total	
Scaling Stream	601		
Scaling Rate	99199		
Scaling Units	Kg/hr		

C-601 CO - 100 C-601

COMPONENT DATA SHEET

SCREW

CODE OF ACCOUNT: 211

COMPONENT DESIGN DATA:

MATERIAL	CS
RATE	168.00 TPH
LENGTH	100.00 FEET
DIAMETER	14.00 INCHES
PROD DENSITY	50.00 PCF
DRIVER POWER	75.00 HP
TOTAL WEIGHT	8500 LBS

COST DATA:

ESTIMATED PURCHASE COST USD 21900.

	MATERIAL USD	MANPOWER USD	MANPOWER MANHOURS	L/M RATIO USD/USD
EQUIPMENT&SETTING	21900.	466.	25	0.021
PIPING	1354.	1314.	71	0.970
CIVIL	1976.	7142.	455	3.615
STRUCTURAL STEEL	988.	285.	17	0.288
INSTRUMENTATION	493.	0.	0	0.000
ELECTRICAL	506.	745.	38	1.472
INSULATION	0.	0.	0	0.000
PAINT	183.	416.	31	2.276
SUBTOTAL	27400.	10368.	637	0.378

INSTALLED DIRECT COST 37800. INST'L COST/PE RATIO 1.726

IPE Version: 4.0
Estimate Base: 1st Quarter 1997 (4.0)
June 30, 1997
Run Date: 16NOV98-11:37:45

C-601short CO - 100 C-601short

COMPONENT DATA SHEET

SCREW

CODE OF ACCOUNT: 211

COMPONENT DESIGN DATA:

MATERIAL	A285C
RATE	69.00 TPH
LENGTH	15.00 FEET
DIAMETER	9.00 INCHES
PROD DENSITY	50.00 PCF
DRIVER POWER	5.00 HP
TOTAL WEIGHT	1100 LBS

COST DATA:

ESTIMATED PURCHASE COST USD 4900.

	---MATERIAL--	*** M A N P O W E R ***		L/M RATIO
	USD	USD	MANHOURS	USD/USD
EQUIPMENT&SETTING	4900.	466.	25	0.095
PIPING	897.	1058.	57	1.180
CIVIL	359.	1300.	83	3.619
STRUCTURAL STEEL	180.	52.	3	0.288
INSTRUMENTATION	493.	0.	0	0.000
ELECTRICAL	393.	668.	34	1.699
INSULATION	0.	0.	0	0.000
PAINT	90.	180.	13	1.995
SUBTOTAL	7312.	3724.	215	0.509

INSTALLED DIRECT COST 11000. INST'L COST/PE RATIO 2.245

IPE Version: 4.0
Estimate Base: 1st Quarter 1997 (4.0)
June 30, 1997
Run Date: 17NOV98-14:10:54

Equipment Num	:: C-614
Eqipment Name	:: Aerobic Sludge Screw
Associated PFD	:: PFD-P100-A603
Equipment Type	:: SCREW
Equipment Category	:: CONVEYOR
Equipment Description	:: 9" DIA X 25' LONG
Number Required	:: 1
Number Spares	:: 0
Scaling Stream	:: 623
Base Cost	:: 5700.00
Cost Basis	:: ICARUS
Cost Year	:: 1997
Base for Scaling	:: 978.000
Base Type	:: FLOW
Base Units	:: KG/HR
Install. Factor	:: 1.4000
Install. Factor Basis	:: DELTA-T98
Scale Factor Exponent	:: 0.7800
Scale Factor Basis	:: GARRETT
Material of Const	:: CS
Utility Calc.	:: ASPEN FORT BLCK
Utility Stream	:: WC614
Utility Type	:: POWER
Date Modified	:: 12/22/98
Notes	:: 7.5 hp (6 kW) specified by Icarus.

Eq. No.	C-614		
Eq. Name	Aerobic Sludge Screw		
Associated PFD	A603		
Stream for Design	623		
Stream Description	Conveyor Inlet		
Flow Rate	978	Kg/hr	R9809G
Average Density	1.12		
Frac Solids	0.252		
Density	69.9	lb/ft^3	
Flowrate	30.8	cfh	
Flow (tons/h)	1.1		
Design Basis	9	in. dia	Perry 5th, P. 7-7, Table 7-5, Max RPM, 30% Full
	280	cfh	rated capacity
	25	ft. length	Assume dumping into C601
Cost Estimation			
Icarus 1997			Attached
Scaling Stream	623		
Scaling Rate	978		
Scaling Units	Kg/hr		

C-614 CO - 100 C-614

COMPONENT DATA SHEET

SCREW

CODE OF ACCOUNT: 211

COMPONENT DESIGN DATA:

MATERIAL	CS
RATE	69.00 TPH
LENGTH	25.00 FEET
DIAMETER	9.00 INCHES
PROD DENSITY	50.00 PCF
DRIVER POWER	7.50 HP
TOTAL WEIGHT	1700 LBS

COST DATA:

ESTIMATED PURCHASE COST USD 5700.

	MATERIAL USD	MANPOWER USD	MANPOWER MANHOURS	L/M RATIO USD/USD
EQUIPMENT&SETTING	5700.	466.	25	0.082
PIPING	897.	1058.	57	1.180
CIVIL	539.	1950.	124	3.618
STRUCTURAL STEEL	269.	78.	5	0.288
INSTRUMENTATION	493.	0.	0	0.000
ELECTRICAL	393.	668.	34	1.699
INSULATION	0.	0.	0	0.000
PAINT	98.	203.	15	2.080
SUBTOTAL	8389.	4422.	260	0.527

INSTALLED DIRECT COST 12800. INST'L COST/PE RATIO 2.246

IPE Version: 4.0
Estimate Base: 1st Quarter 1997 (4.0)
June 30, 1997
Run Date: 16NOV98-11:37:45

```
Equipment Num        :: H-602
Eqipment Name        :: Anaerobic Digestor Feed Cooler
Associated PFD       :: PFD-P100-A602
Equipment Type       :: SHELL-TUBE
Equipment Category   :: HEATX
Equipment Description:: TEMA BES TYPE, FLOATING HEAD
Number Required      :: 1
Number Spares        :: 0
Scaling Stream       :: AREA0602
Base Cost            :: 128600.00
Cost Basis           :: ICARUS
Cost Year            :: 1997
Base for Scaling     :: 7627.000
Base Type            :: SIZE
Base Units           :: SQF
Install. Factor      :: 2.1000
Install. Factor Basis:: DELTA-T98
Scale Factor Exponent:: 0.7400
Scale Factor Basis   :: VENDOR
Material of Const    :: SS316
                        CS
Utility Calc.        :: ASPEN UOS BLOCK
Utility Stream       :: QH602
Utility Type         :: COOLING-WATER
Date Modified        :: 01/13/99
```

Eq. No.	H-602			
Eq. Name	Anerobic Digestor Feed Cooler			
Associated PFD	A602			
Stream for Design	QH602	7.3	MMKcal/hr	
	QH602	28.9	MMBtu/hr	Delta-T used 14.0 MMBtu/hr
Inlet	612	75	C	R9809G
Outlet	613	35	C	R9809G
Cooling Water Inlet	1046	28	C	
Cooling Water Outlet	1047	37	C	
LMTD		18.3	C	
LMTD		33.0	F	
U		115	BTU/(h*sf*	Merrick
Area total		7627	sf	
Cost Estimation				
LDR Quote 1	2,228	sf	$62,799	Merrick LDR Quote 9/1/98
LDR Quote 2	3,862	sf	$94,544	Merrick LDR Quote 9/1/98
Calc Scaling Exp	0.74			
Scaled Cost Total	$ 156,835		1998	SS 316
ICARUS- 1997	**$ 128,600**	**7,627**	**SQF**	**SS316 Tubes/CS Shell - Selected for Estimation**
	$ 153,200	7,627	SQF	SS316 Tubes/SS316 Shell - For Reference
	$ 72,500	2,228	SQF	SS316 Tubes/SS316 Shell - For Reference to above
	$ 217,500			3 @ 2228 sqft required - For Reference to above
	$ 106,100	3,862	SQF	SS316 Tubes/SS316 Shell - For Reference to above
	$ 212,200			2 @ 3862 sqft required - For Reference to above
Scaling Stream	AREA602			
Scaling Rate	7627.0			
Scaling Units	SQF			

H-602 HE - 100 H-602

EQUIPMENT ITEM DESIGN DATA SHEET

FLOAT-HEAD

NO.	ITEM	VALUE SPECIFIED BY USER	VALUE USED BY SYSTEM	UNITS
	GENERAL DESIGN DATA			
1.	TEMA TYPE		BES	
2.	SURFACE AREA	7627.0	7627.0	SF
3.	NUMBER OF SHELLS	1	1	
4.	NUMBER OF TUBE PASSES		2	
5.	NUMBER OF SHELL PASSES		1	
6.	VENDOR GRADE		HIGH	
	SHELL DATA			
7.	SHELL MATERIAL SYMBOL	A 515	A 515	
8.	SHELL DIAMETER		44.00	INCHES
9.	SHELL LENGTH		33.00	FEET
10.	SHELL PRESSURE		150.0	PSIG
11.	SHELL TEMPERATURE		650.0	DEG F
12.	CORROSION ALLOWANCE		0.1250	INCHES
13.	SHELL THICKNESS		0.4375	INCHES
14.	ASA RATING		300	
15.	NUMBER OF BAFFLES		22	
16.	SHELL FABRICATION TYPE		PLATE	
17.	EXPANSION JOINT		NO	
	TUBE DATA			
18.	TUBE MATERIAL SYMBOL	316LW	316LW	
19.	NUMBER OF TUBES		972	
20.	TUBE DIAMETER (OD)		1.000	INCHES
21.	TUBE LENGTH		30.00	FEET
22.	TUBE PRESSURE		150.0	PSIG
23.	TUBE TEMPERATURE		650.0	DEG F
24.	TUBE CORROSION ALLOWANCE		0.0000	INCHES
25.	TUBE WALL THICKNESS		0.0490	INCHES
26.	TUBE GAGE		18	BWG
27.	PITCH TYPE		TRIANGULAR	
28.	TUBE PITCH		1.250	INCHES
29.	TUBE SEAL TYPE		SEALW	
	TUBE SHEET DATA			
30.	TUBE SHEET MATERIAL		316L	
31.	TUBE SHEET THICKNESS		2.750	INCHES
32.	CORROSION ALLOWANCE		0.0000	INCHES
33.	CHANNEL MATERIAL SYMBOL		316L	
	FLOATING HEAD DATA			
34.	HEAD MATERIAL SYMBOL		316L	
35.	FLOATING HEAD THICKNESS		0.3750	INCHES
	SHELL SIDE HEAD DATA			
36.	HEAD MATERIAL SYMBOL		A 515	
37.	ASA RATING		300	
38.	HEAD THICKNESS		0.4375	INCHES
	HEAD DATA			
39.	HEAD MATERIAL SYMBOL		316L	
40.	ASA RATING		300	
41.	HEAD THICKNESS		0.3750	INCHES
	WEIGHT DATA			
42.	SHELL		6900	LBS
43.	TUBES		14800	LBS
44.	HEADS		1300	LBS
45.	INTERNALS/BAFFLES		3000	LBS
46.	NOZZLES		870	LBS

47.	FLANGES	4300	LBS
48.	BASE RING + LUGS	60	LBS
49.	TUBE SHEET	1500	LBS
50.	SADDLES	340	LBS
51.	FITTINGS, ETC.	2600	LBS
52.	TOTAL WEIGHT	35700	LBS

VENDOR COST DATA

53.	MATERIAL COMPONENT COST	77073	USD
54.	SHOP MANPOWER COST	15882	USD
55.	SHOP OVERHEAD	15861	USD
56.	GENERAL OFFICE OVERHEAD	9598	USD
57.	PROFIT	10186	USD
58.	TOTAL COST	128600	USD
59.	RESULTING UNIT COST	3.602	USD/LBS
60.	RESULTING UNIT COST	16.86	USD/SF

	---MATERIAL--	*** M A N P O W E R ***		L/M RATIO
	USD	USD	MANHOURS	USD/USD
EQUIPMENT&SETTING	128600.	870.	47	0.007
PIPING	99708.	16445.	890	0.165
CIVIL	1062.	1442.	92	1.358
STRUCTURAL STEEL	0.	0.	0	0.000
INSTRUMENTATION	10467.	2457.	127	0.235
ELECTRICAL	0.	0.	0	0.000
INSULATION	21940.	9824.	559	0.448
PAINT	225.	457.	33	2.031
SUBTOTAL	262001.	31494.	1748	0.120

INSTALLED DIRECT COST 293500. INST'L COST/PE RATIO 2.282

IPE Version: 4.0
Estimate Base: 1st Quarter 1997 (4.0)
June 30, 1997
Run Date: 13JAN99-13:31:50

H-602 HE - 100 H-602

EQUIPMENT ITEM DESIGN DATA SHEET

FLOAT-HEAD

NO.	ITEM	VALUE SPECIFIED BY USER	VALUE USED BY SYSTEM	UNITS
	GENERAL DESIGN DATA			
1.	TEMA TYPE		BES	
2.	SURFACE AREA	7627.0	7627.0	SF
3.	NUMBER OF SHELLS	1	1	
4.	NUMBER OF TUBE PASSES		2	
5.	NUMBER OF SHELL PASSES		1	
6.	VENDOR GRADE		HIGH	
	SHELL DATA			
7.	SHELL MATERIAL SYMBOL	SS316	SS316	
8.	SHELL DIAMETER		44.00	INCHES
9.	SHELL LENGTH		33.00	FEET
10.	SHELL PRESSURE		150.0	PSIG
11.	SHELL TEMPERATURE		650.0	DEG F
12.	CORROSION ALLOWANCE		0.0000	INCHES
13.	SHELL THICKNESS		0.4375	INCHES
14.	ASA RATING		300	
15.	NUMBER OF BAFFLES		22	
16.	SHELL FABRICATION TYPE		PLATE	
17.	EXPANSION JOINT		NO	
	TUBE DATA			
18.	TUBE MATERIAL SYMBOL	316LW	316LW	
19.	NUMBER OF TUBES		972	
20.	TUBE DIAMETER (OD)		1.000	INCHES
21.	TUBE LENGTH		30.00	FEET
22.	TUBE PRESSURE		150.0	PSIG
23.	TUBE TEMPERATURE		650.0	DEG F
24.	TUBE CORROSION ALLOWANCE		0.0000	INCHES
25.	TUBE WALL THICKNESS		0.0490	INCHES
26.	TUBE GAGE		18	BWG
27.	PITCH TYPE		TRIANGULAR	
28.	TUBE PITCH		1.250	INCHES
29.	TUBE SEAL TYPE		SEALW	
	TUBE SHEET DATA			
30.	TUBE SHEET MATERIAL		316L	
31.	TUBE SHEET THICKNESS		2.750	INCHES
32.	CORROSION ALLOWANCE		0.0000	INCHES
33.	CHANNEL MATERIAL SYMBOL		316L	
	FLOATING HEAD DATA			
34.	HEAD MATERIAL SYMBOL		316L	
35.	FLOATING HEAD THICKNESS		0.3750	INCHES
	SHELL SIDE HEAD DATA			
36.	HEAD MATERIAL SYMBOL		SS316	
37.	ASA RATING		300	
38.	HEAD THICKNESS		0.4375	INCHES
	HEAD DATA			
39.	HEAD MATERIAL SYMBOL		316L	
40.	ASA RATING		300	
41.	HEAD THICKNESS		0.3750	INCHES
	WEIGHT DATA			
42.	SHELL		7000	LBS
43.	TUBES		14800	LBS
44.	HEADS		1300	LBS
45.	INTERNALS/BAFFLES		3000	LBS
46.	NOZZLES		870	LBS

47.	FLANGES	4400	LBS
48.	BASE RING + LUGS	60	LBS
49.	TUBE SHEET	1500	LBS
50.	SADDLES	340	LBS
51.	FITTINGS, ETC.	2700	LBS
52.	TOTAL WEIGHT	36000	LBS

VENDOR COST DATA

53.	MATERIAL COMPONENT COST	94324	USD
54.	SHOP MANPOWER COST	17758	USD
55.	SHOP OVERHEAD	17484	USD
56.	GENERAL OFFICE OVERHEAD	11446	USD
57.	PROFIT	12188	USD
58.	TOTAL COST	153200	USD
59.	RESULTING UNIT COST	4.256	USD/LBS
60.	RESULTING UNIT COST	20.09	USD/SF

	:---MATERIAL--:	:*** M A N P O W E R ***:		L/M RATIO :
	USD :	USD	MANHOURS	USD/USD :
EQUIPMENT&SETTING	153200.	870.	47	0.006
PIPING	120746.	18691.	1012	0.155
CIVIL	1062.	1442.	92	1.358
STRUCTURAL STEEL	0.	0.	0	0.000
INSTRUMENTATION	10862.	2457.	127	0.226
ELECTRICAL	0.	0.	0	0.000
INSULATION	21940.	9824.	559	0.448
PAINT	0.	0.	0	0.000
SUBTOTAL	307809.	33284.	1837	0.108

INSTALLED DIRECT COST 341100. INST'L COST/PE RATIO 2.227

IPE Version: 4.0
Estimate Base: 1st Quarter 1997 (4.0)
June 30, 1997
Run Date: 13JAN99-13:31:50

H-602 HE - 100 H-602

EQUIPMENT ITEM DESIGN DATA SHEET

FLOAT-HEAD

NO.	ITEM	VALUE SPECIFIED BY USER	VALUE USED BY SYSTEM	UNITS
	GENERAL DESIGN DATA			
1.	TEMA TYPE		BES	
2.	SURFACE AREA	3862.0	3862.0	SF
3.	NUMBER OF SHELLS		1	
4.	NUMBER OF TUBE PASSES		2	
5.	NUMBER OF SHELL PASSES		1	
6.	VENDOR GRADE		HIGH	
	SHELL DATA			
7.	SHELL MATERIAL SYMBOL	SS316	SS316	
8.	SHELL DIAMETER		38.00	INCHES
9.	SHELL LENGTH		23.00	FEET
10.	SHELL PRESSURE		150.0	PSIG
11.	SHELL TEMPERATURE		650.0	DEG F
12.	CORROSION ALLOWANCE		0.0000	INCHES
13.	SHELL THICKNESS		0.4375	INCHES
14.	ASA RATING		300	
15.	NUMBER OF BAFFLES		18	
16.	SHELL FABRICATION TYPE		PLATE	
17.	EXPANSION JOINT		NO	
	TUBE DATA			
18.	TUBE MATERIAL SYMBOL	316LW	316LW	
19.	NUMBER OF TUBES		738	
20.	TUBE DIAMETER (OD)		1.000	INCHES
21.	TUBE LENGTH		20.00	FEET
22.	TUBE PRESSURE		150.0	PSIG
23.	TUBE TEMPERATURE		650.0	DEG F
24.	TUBE CORROSION ALLOWANCE		0.0000	INCHES
25.	TUBE WALL THICKNESS		0.0490	INCHES
26.	TUBE GAGE		18	BWG
27.	PITCH TYPE		TRIANGULAR	
28.	TUBE PITCH		1.250	INCHES
29.	TUBE SEAL TYPE		SEALW	
	TUBE SHEET DATA			
30.	TUBE SHEET MATERIAL		316L	
31.	TUBE SHEET THICKNESS		2.500	INCHES
32.	CORROSION ALLOWANCE		0.0000	INCHES
33.	CHANNEL MATERIAL SYMBOL		316L	
	FLOATING HEAD DATA			
34.	HEAD MATERIAL SYMBOL		316L	
35.	FLOATING HEAD THICKNESS		0.3125	INCHES
	SHELL SIDE HEAD DATA			
36.	HEAD MATERIAL SYMBOL		SS316	
37.	ASA RATING		300	
38.	HEAD THICKNESS		0.4375	INCHES
	HEAD DATA			
39.	HEAD MATERIAL SYMBOL		316L	
40.	ASA RATING		300	
41.	HEAD THICKNESS		0.3125	INCHES

WEIGHT DATA

42.	SHELL	4200	LBS
43.	TUBES	7500	LBS
44.	HEADS	930	LBS
45.	INTERNALS/BAFFLES	1900	LBS
46.	NOZZLES	690	LBS
47.	FLANGES	3400	LBS
48.	BASE RING + LUGS	36	LBS
49.	TUBE SHEET	1000	LBS
50.	SADDLES	270	LBS
51.	FITTINGS, ETC.	1800	LBS
52.	TOTAL WEIGHT	21700	LBS

VENDOR COST DATA

53.	MATERIAL COMPONENT COST	60120	USD
54.	SHOP MANPOWER COST	14259	USD
55.	SHOP OVERHEAD	14027	USD
56.	GENERAL OFFICE OVERHEAD	8506	USD
57.	PROFIT	9188	USD
58.	TOTAL COST	106100	USD
59.	RESULTING UNIT COST	4.889	USD/LBS
60.	RESULTING UNIT COST	27.47	USD/SF

	---MATERIAL--	*** M A N P O W E R ***		L/M RATIO
	USD	USD	MANHOURS	USD/USD
EQUIPMENT&SETTING	106100.	752.	41	0.007
PIPING	80938.	14457.	782	0.179
CIVIL	938.	1321.	84	1.408
STRUCTURAL STEEL	0.	0.	0	0.000
INSTRUMENTATION	9574.	2411.	125	0.252
ELECTRICAL	0.	0.	0	0.000
INSULATION	17717.	7699.	438	0.435
PAINT	0.	0.	0	0.000
SUBTOTAL	215268.	26640.	1470	0.124

INSTALLED DIRECT COST 241900. INST'L COST/PE RATIO 2.280

IPE Version: 4.0
Estimate Base: 1st Quarter 1997 (4.0)
June 30, 1997
Run Date: 16NOV98-11:45:13

H-602 HE - 100 H-602

EQUIPMENT ITEM DESIGN DATA SHEET

FLOAT-HEAD

NO.	ITEM	VALUE SPECIFIED BY USER	VALUE USED BY SYSTEM	UNITS
	GENERAL DESIGN DATA			
1.	TEMA TYPE		BES	
2.	SURFACE AREA	2228.0	2228.0	SF
3.	NUMBER OF SHELLS		1	
4.	NUMBER OF TUBE PASSES		2	
5.	NUMBER OF SHELL PASSES		1	
6.	VENDOR GRADE		HIGH	
	SHELL DATA			
7.	SHELL MATERIAL SYMBOL	SS316	SS316	
8.	SHELL DIAMETER		30.00	INCHES
9.	SHELL LENGTH		23.00	FEET
10.	SHELL PRESSURE		150.0	PSIG
11.	SHELL TEMPERATURE		650.0	DEG F
12.	CORROSION ALLOWANCE		0.0000	INCHES
13.	SHELL THICKNESS		0.4375	INCHES
14.	ASA RATING		300	
15.	NUMBER OF BAFFLES		18	
16.	SHELL FABRICATION TYPE		PLATE	
17.	EXPANSION JOINT		NO	
	TUBE DATA			
18.	TUBE MATERIAL SYMBOL	316LW	316LW	
19.	NUMBER OF TUBES		426	
20.	TUBE DIAMETER (OD)		1.000	INCHES
21.	TUBE LENGTH		20.00	FEET
22.	TUBE PRESSURE		150.0	PSIG
23.	TUBE TEMPERATURE		650.0	DEG F
24.	TUBE CORROSION ALLOWANCE		0.0000	INCHES
25.	TUBE WALL THICKNESS		0.0490	INCHES
26.	TUBE GAGE		18	BWG
27.	PITCH TYPE		TRIANGULAR	
28.	TUBE PITCH		1.250	INCHES
29.	TUBE SEAL TYPE		SEALW	
	TUBE SHEET DATA			
30.	TUBE SHEET MATERIAL		316L	
31.	TUBE SHEET THICKNESS		1.875	INCHES
32.	CORROSION ALLOWANCE		0.0000	INCHES
33.	CHANNEL MATERIAL SYMBOL		316L	
	FLOATING HEAD DATA			
34.	HEAD MATERIAL SYMBOL		316L	
35.	FLOATING HEAD THICKNESS		0.2500	INCHES
	SHELL SIDE HEAD DATA			
36.	HEAD MATERIAL SYMBOL		SS316	
37.	ASA RATING		300	
38.	HEAD THICKNESS		0.4375	INCHES
	HEAD DATA			
39.	HEAD MATERIAL SYMBOL		316L	
40.	ASA RATING		300	
41.	HEAD THICKNESS		0.2500	INCHES

WEIGHT DATA

42.	SHELL	3300	LBS
43.	TUBES	4300	LBS
44.	HEADS	560	LBS
45.	INTERNALS/BAFFLES	1100	LBS
46.	NOZZLES	400	LBS
47.	FLANGES	2200	LBS
48.	BASE RING + LUGS	29	LBS
49.	TUBE SHEET	540	LBS
50.	SADDLES	180	LBS
51.	FITTINGS, ETC.	1300	LBS
52.	TOTAL WEIGHT	13900	LBS

VENDOR COST DATA

53.	MATERIAL COMPONENT COST	39141	USD
54.	SHOP MANPOWER COST	10552	USD
55.	SHOP OVERHEAD	10042	USD
56.	GENERAL OFFICE OVERHEAD	6095	USD
57.	PROFIT	6670	USD
58.	TOTAL COST	72500	USD
59.	RESULTING UNIT COST	5.216	USD/LBS
60.	RESULTING UNIT COST	32.54	USD/SF

	:---MATERIAL--:	:*** M A N P O W E R ***:		L/M RATIO :
	USD	USD	MANHOURS	USD/USD
EQUIPMENT&SETTING	72500.	752.	41	0.010
PIPING	52945.	11775.	637	0.222
CIVIL	783.	1163.	74	1.485
STRUCTURAL STEEL	0.	0.	0	0.000
INSTRUMENTATION	10723.	2411.	125	0.225
ELECTRICAL	0.	0.	0	0.000
INSULATION	14357.	6666.	379	0.464
PAINT	0.	0.	0	0.000
SUBTOTAL	151308.	22767.	1256	0.150

INSTALLED DIRECT COST 174100. INST'L COST/PE RATIO 2.401

IPE Version: 4.0
Estimate Base: 1st Quarter 1997 (4.0)
June 30, 1997
Run Date: 16NOV98-11:45:13

LDR CORP.

100 S. ADAMS RD
SAND SPRINGS OK. 74063
TELE: 918-241-0174
FAX: 918-241-0175

TO: MERRICK ENGINEERS
P.O. BOX 22026
DENVER, CO 80222
ATTN: CHRISTY SCHMID

QUOTE #	98-642
DATE	9/1/98
INQUIRY DATE	8/26/98
INQUIRY #	19013104
* EST DELIVERY	12 WEEKS
** TERMS	PROGRESS PAYMENTS
F.O.B	SAND SPRINGS, OK
SHIPPED V.I.A.	TRUCK
SALESMAN	G. LAWHORN/FRY

QTY	DESCRIPTION	PRICE EACH	AMOUNT
	MATERIAL, LABOR AND ENGINEERING TO FABRICATE:		
	"BUDGET PRICES ONLY"		
ONE	27 X 288 TEMA TYPE B E S HEAT EXCHANGER PER ATTACHED LDR SPECIFICATION SHEET. TAG: ITEM NO. H-602 ESTIMATED WEIGHT: 11,700 LBS. ALL MATERIAL: 316 STAINLESS STEEL 473 TUBES: 0.75" O.D. X .065(AVG) BWG X 24' LG; SA-249-TP316 STAINLESS STEEL PRICE:		62,799.0
	35 X 288 TEMA TYPE B E S HEAT EXCHANGER PER ATTACHED LDR SPECIFICATION SHEET. TAG: ITEM NO. H-602 ALT. ESTIMATED WEIGHT: 18,400 LBS. ALL MATERIAL: 316 STAINLESS STEEL 820 TUBES: 0.75" O.D. X .065(AVG) BWG X 24' LG; SA-249-TP316 STAINLESS STEEL PRICE:		94,544.0
ONE	26 X 288 TEMA TYPE B E S HEAT EXCHANGER PER ATTACHED LDR SPECIFICATION SHEET. TAG: ITEM NO. H-606 ESTIMATED WEIGHT: 10,700 LBS. ALL MATERIAL: 316 STAINLESS STEEL 418 TUBES: 0.75" O.D. X .065(AVG) BWG X 24' LG; SA-249-TP316 STAINLESS STEEL PRICE:		57,969.0
	** PROGRESS PAYMENTS REQUIRED: 10% UPON DRAWING APPROVAL SUBMITTAL 30% UPON RECEIPT OF MATERIALS LESS TUBES 20% UPON RECEIPT OF TUBES BALANCE UPON COMPLETION		
	* DELIVERY AS QUOTED IS AFTER RECEIPT OF APPROVAL DRAWINGS. PRICES ARE BASED ON USING FCAW WELDING.		

BY:

FIGURE G-5.2
HEAT EXCHANGER SPECIFICATION SHEET

1				Job No.	
2	Customer MERRICK			Reference No.	
3	Address			Proposal No.	
4	Plant Location			Date	Rev.
5	Service of Unit ANAEROBIC DIGESTOR FEED Cooler			Item No. H-602	
6	Size 27-288 Type BES (Hor/~~Vert~~)			Connected In ~~Parallel~~ ~~Series~~	
7	Surf/Unit (~~Gross~~/Eff.) 2181 Sq Ft: Shells/Unit 1			Surf/Shell (Gross/Eff.) 2181 Sq Ft	
8	PERFORMANCE OF ONE UNIT				
9	Fluid Allocation	Shell Side		Tube Side	
10	Fluid Name	DIGESTOR FEED		C. WATER	
11	Fluid Quantity, Total Lb/Hr	160110 x 1.15		1162332 x 1.15	
12	Vapor (In/Out)				
13	Liquid	160110 x 1.15		1162332 x 1.15	
14	Steam				
15	Water				
16	Noncondensable				
17	Temperature (In/Out) °F	245	131	82.4	98.6
18	Specific Gravity	120 °C	55 °C	37	37
19	Viscosity, Liquid Cp				
20	Molecular Weight, Vapor				
21	Molecular Weight, Noncondensable				
22	Specific Heat Btu/Lb °F				
23	Thermal Conductivity Btu Ft/Hr Sq Ft °F				
24	Latent Heat Btu/Lb @ °F				
25	Inlet Pressure Psig				
26	Velocity Ft/S				
27	Pressure Drop, Allow./Calc. Psi	5 / 5		5 / 5	
28	Fouling Resistance (Min.)	002		002	
29	Heat Exchanged 18830 000 x 1.12	Btu/Hr: MTD (Corrected)		86	°F
30	Transfer Rate, Service 115.05	Clean			Btu/Hr Sq Ft °F
31	CONSTRUCTION OF ONE SHELL			Sketch (Bundle/Nozzle Orientation)	
32		Shell Side	Tube Side		
33	Design/Test Pressure Psig	75 /	150 /		
34	Design Temperature °F	300	300		
35	No. Passes per Shell	1	1 X		
36	Corrosion Allowance In.	0	0		
37	Connections In	6	16		
38	Size & Out	6	16		
39	Rating Intermediate				
40	Tube No. 473 OD 3/4 In.: Thk (Min/Avg) 16 In.: Length 24 Ft: Pitch 1 15/16 In. ◇ 30 ◇ 60 ◇ 90 ◇ 45				
41	Tube Type 316SS		Material		
42	Shell 316SS ID 27 ~~00~~ In.		Shell Cover 316SS	(Integ.) (Remov.)	
43	Channel or Bonnet 316SS		Channel Cover 316SS		
44	Tubesheet-Stationary 316SS		Tubesheet-Floating 316SS		
45	Floating Head Cover 316 SS		Impingement Protection yes		
46	Baffles-Cross 316SS Type SEGM		% Cut (Diam/Area)	Spacing: c/c	Inlet In.
47	Baffles-Long		Seal Type		
48	Supports-Tube	U-Bend		Type	
49	Bypass Seal Arrangement		Tube-Tubesheet Joint		
50	Expansion Joint 316SS		Type X BELLOWS ON PACKING GLAND.		
51	~~Rear~~-Inlet Nozzle	Bundle Entrance		Bundle Exit	
52	Gaskets-Shell Side		Tube Side		
53	-Floating Head				
54	Code Requirements			TEMA Class	
55	Weight/Shell	Filled with Water		Bundle	Lb
56	Remarks				
57					
58					
59					
60					
61					

473 tubes
+24
x .9375
= 2222

MERRICK®
Engineers & Architects

HEAT EXCHANGER

DATE 8/25/98 SHEET 1 OF 1
DATA SHEET #
BY CPS CHK'D

CLIENT
PROJECT
LOCATION
CONTRACT # / TASK 19013104

REVISION	DATE	BY

SIZE: TYPE: SURFACE AREA: FT²
EQUIPMENT NO./DESCRIPTION / H-602. ANAEROBIC DIGESTOR FEED COOLER DRAWING NO.
LOCATION:

CONDITIONS OF SERVICE (ONE UNIT)

HEAT EXCHANGED 4.745 MM KCAL/HR | MTD(WTD)(CORR) °C | TRANSFER RATE: SERVICE | CLEAN

	SHELL SIDE		TUBE SIDE	
FLUID CIRCULATED	DIGESTER FEED		COOLING WATER	
TOTAL FLUID ENTERING	72,626 KG/HR		527,222 KG/HR	
	IN	OUT	IN	OUT
VAPOR KG/HR (MWT)	0	0		
LIQUID KG/HR	72,626	72,626		
STEAM KG/HR				
WATER KG/HR			527,222	527,222
NONCONDENSABLES KG/HR (MWT)				
LIQUID GRAVITY @ TEMP.		0.966		
VISCOSITY: LIQUID, CP				
HEAT: LATENT, BTU/LB; SP; BTU/LB DEG F				
THERM COND:BTU/(HR)(SQ FT)(DEG F PER FT)				
TEMPERATURE °C	120	55	28	37
OPERATING PRESSURE ATM	2.03	2.03	4.14	4.14
VELOCITY				
NO. PASSES				
PRESSURE DROP ATM	ALLOW.	CALC.	ALLOW.	CALC.
FOULING RESISTANCE (MIN.)				

CONSTRUCTION

PRESSURE, ATM	DESIGN	TEST	DESIGN	TEST
DESIGN TEMPERATURE, °C				

NO. TUBES | O.D. IN. | MIN AVG.
LENGTH FT. | PITCH IN
SHELL DIAM IN. ID IN. OD | MAX. BUNDLE DIAM ALLOW
TRANS BAFFLE | SPACING IN OUT %
LONG BAFFLE | INPINGMENT BAFFL YES NO

	SHELL SIDE NO.	SIZE	RATING & FACING	TUBE SIDE NO.	SIZE	RATING & FACING
INLET	1	10"		1	16"	
OUTLET	1	6"		1	16"	
VENT						
DRAIN						
TEMP CONN						
PRESS CONN						

MATERIALS: (MARK SR & XR - S=SPOT, F=FULL)

ITEM	MATERIAL SPECIFICATION	XR & SR
TUBES	316 SS	
SHELL	316 SS	
SHELL COVER(REM)(INTEG)		
CHANNEL	316 SS	
CHAN. COVER(REM)(INTEG)		
FLOATING-HEAT COVER		
TUBE SHEETS		
BAFFLES & SUPPORT PLATES		
BOLTING: SHELL COVER		
CHANNEL & COVER		
FLOATING HEAD		

SLIP-ON NOZZLE FLANGES ALLOWED YES NO
SLIP-ON ENG FLANGES ALLOWED YES NO
CORROSION ALLOW. SHELL SIDE IN. TUBE SIDE IN.
GASKETS: SHELL
CHANNEL
FLOATING-HEAD COVER
TEST RINGS SPAR GASKETS
STACKING HIGH
WEIR HEIGHT VOLUME BEHIND WEIR

TEMA CLASS: CODE REQUIREMENTS AND SPECS:
WEIGHTS PER SHELL SHIPPING LB. FULL OF WATER LB. BUNDLE LB.

REMARKS: DIGESTER FEED CONTAINS APPROX. 1% SOLIDS AND IS 96% WATER
INCLUDE 15% EXCESS AREA AND FLOW, ALL WETTED PARTS TO BE 316 SS

FIGURE G-5.2
HEAT EXCHANGER SPECIFICATION SHEET

Customer	MERRICK			Job No.	
Address				Reference No.	
Plant Location				Proposal No.	
Service of Unit	H-102 ANAEROBIC DIGESTOR FEED COOLER			Date / Rev.	
Size	25-288 Type	(Hor/~~Vert~~)	BES	Item No.	H-102 A&B
Surf/Unit (~~Gross~~/Eff.)	3781 Sq Ft: Shells/Unit	1		Connected In / Parallel / Series	
				Surf/Shell (~~Gross~~/Eff.)	3781 Sq Ft

PERFORMANCE OF ONE UNIT

Fluid Allocation	Shell Side		Tube Side	
Fluid Name	DIGESTER FEED		C. WATER	
Fluid Quantity, Total Lb/Hr	160111 x 1.15		2793228 x 1.15	
Vapor (In/Out)	28820 x 1.15	—		
Liquid		160111 x 1.15	2793228 x	1.15
Steam				
Water				
Noncondensable				
Temperature (In/Out) °F	298 (D.P.)	131		
Specific Gravity				
Viscosity, Liquid Cp				
Molecular Weight, Vapor	18.			
Molecular Weight, Noncondensable				
Specific Heat Btu/Lb °F				
Thermal Conductivity Btu Ft/Hr Sq Ft °F				
Latent Heat Btu/Lb @ °F	946			
Inlet Pressure Psig				
Velocity Ft/S				
Pressure Drop, Allow./Calc. Psi	5 / 5		5 / 7	
Fouling Resistance (Min.)	002		002	

Heat Exchanged 4599000 x 1.15 Btu/Hr: MTD (Corrected) 110.2 WTD °F

Transfer Rate, Service 126.9 Clean Btu/Hr Sq Ft °F

CONSTRUCTION OF ONE SHELL

		Shell Side	Tube Side
Design/Test Pressure	Psig	75 /	150 /
Design Temperature	°F	300	300
No. Passes per Shell		1	1 *
Corrosion Allowance	In.	0	0
Connections Size & Rating	In	10	24
	Out	6	24
	Intermediate		

Sketch (Bundle/Nozzle Orientation)

Tube No. 820 OD 3/4 In.: Thk (Min/Avg) 16 In.: Length 24 Ft: Pitch 1 5/8 In. ◇ 30 ◇ 60 ◇ 90 ◇ 45

Tube Type	316SS BARE	Material	
Shell	316SS 25 ID ~~OD~~ In.	Shell Cover	316SS (Integ.) (Remov.)
Channel or Bonnet	316SS	Channel Cover	316SS
Tubesheet-Stationary	316SS	Tubesheet-Floating	316SS
Floating Head Cover	316SS	Impingement Protection	YES
Baffles-Cross	316SS Type SEGM	% Cut (Diam/Area)	Spacing c/c Inlet In.
Baffles-Long		Seal Type	
Supports-Tube	U-Bend	Type	
Bypass Seal Arrangement		Tube-Tubesheet Joint	
Expansion Joint	316SS	Type * BELLOWS OR PACKING GLAND.	
Inlet Nozzle	Bundle Entrance	Bundle Exit	
Gaskets-Shell Side		Tube Side	
-Floating Head			
Code Requirements		TEMA Class	
Weight/Shell	Filled with Water	Bundle	Lb
Remarks			

Equipment Num	:: M-604
Eqipment Name	:: Nutrient Feed System
Associated PFD	:: PFD-P100-A602
Equipment Type	:: PACKAGE
Equipment Category	:: MISCELLANEOUS
Equipment Description	:: 5 TANKS AND PUMPS
Number Required	:: 1
Number Spares	:: 0
Base Cost	:: 31400.00
Cost Basis	:: VENDOR
Cost Year	:: 1998
Install. Factor	:: 2.5800
Install. Factor Basis	:: VENDOR
Material of Const	:: CS
Utility Calc.	:: ASPEN FORT BLCK
Utility Stream	:: WM604
Utility Type	:: POWER
Date Modified	:: 01/13/99
Notes	:: Expected Power Req: 8 kW. Small system that doesn't require scaling for other cases.

Eq. No.	M-604		
Eq. Name	Nutrient Feed System		
Associated PFD	A602		
Stream for Design	N/A		No Scaling
Power Requirement	10	hp	Estimated
Cost Estimation	Purchase	Installation	
			Phoenix Bio-Systems, Inc. Merrick Appendix F
Macro Nutrient Tank	8500	3500	"Case 2",
Feed Pump	1500	3800	
Micro Nutrient Tank	4500	3500	
Nutrient Pump	1500	3800	
Caustic Pump	1150	3700	
Caustic Tank	9500	17500	
Iron Tank	550	500	
Iron Metering Pump	850	1550	
Phosphate Tank	2500	2500	
Phosphate pump	850	1550	
			Phoenix Bio-Systems, Inc. Merrick Appendix F
Nutrient System	**$31,400**	**$41,900**	"Case 2",
Prorated Additional Piping			
			Phoenix Bio-Systems, Inc. Merrick Appendix F
Total Cost of Option	$6,013,805		"Case 2",
Overhead Portion	$1,130,000		Design Engineering Fee + Site Preparation
Project Cost Less Overhead	$4,883,805		
Overall Piping & Installation	$518,100		Controls+Temp Control+Piping
Overall Piping & Inst %	10.61%		
Installation Cost Above	$41,900		Per above, extra piping and inst. Prorated
Additional Prorated Installatio	$7,776		
Total Installation Cost	**$49,676**		
Installation Factor	**2.58**		

CLIENT:	**NREL**
PHONE/FAX:	
PROJECT NUMBER:	
DATE:	5/18/98
TYPE:	Anaerobic/Aerobic
LOAD RATE:	12 g/l/d & 0.55 g/l/d
COD:	6510 mg/l & 520 mg/l
FLOW:	1105 gpm

ITEM	Description	Qty	Unit Cost	Installation	Q x UC + I	Totals
Treatability						
Laboratory Analysis						
Preliminary Design						$0.00
Equalization						
Dimensions						
Capacity (gal)	500,000	1	450,000.00	100,000.00	550,000.00	$550,000.00
Main Reactor						
Dimensions	26' d x 60'hAOS aqua St	4				
Capacity (gal)	950,000	1	750,000.00	175,000.00	925,000.00	
Distribution Manifold	ICM s/s	16	4,950.00	32,500.00	111,700.00	
Overflow collection system	PVC	4	15,500.00	22,000.00	84,000.00	
Separator	10 x 12 FRP Custom	4	28,000.00	38,700.00	150,700.00	
Sample Cocks T-606	1" PVC	36	50.00	1,200.00	3,000.00	
Packing	TriPack PP	6370	12.00	2,500.00	78,940.00	
Insulation		19600	7.00		137,200.00	
			1,218,640	271,900 est 159,265 piping inst 431,165		$1,490,540.00
						1649205 (35,NST
Decarbonator						
Capacity	5,000 gal	1	22,500.00	27,500.00	50,000.00	
Dimensions	8'd x 18				0.00	
Distributor	s/s	1	7,590.00	9,800.00	17,390.00	
Packing	TriPack 3.5 PP	700	12.00	1,500.00	9,900.00	
Demister		1	2,500.00	1,000.00	3,500.00	
Gratings	FRP	1	4,500.00	3,000.00	7,500.00	
Fan	4 hp	1	1,250.00	2,200.00	3,450.00	
Drain						
			46,740	45,000		$91,740.00

Controls						
Field Instruments		1	85,000.00	8,500.00	93,500.00	
Pressure Ind		18	250.00	750.00	5,250.00	
Temp Indicators		18	250.00	750.00	5,250.00	
pH Controller		6	2,500.00	2,000.00	17,000.00	
Biogas Meter		1	4,300.00	1,250.00	5,550.00	
Panel		1	3,800.00	2,250.00	6,050.00	
PLC		1	9,500.00	5,500.00	15,000.00	
Control computer		1	10,500.00	7,500.00	18,000.00	
Software		1	4,000.00	12,000.00	16,000.00	
						$181,600.00*
Temp Control						
Hot water heater		0	0.00	0.00	0.00	
Heat Exch		2	12,500.00	12,500.00	37,500.00	
						$37,500.00*
BioGas Scrubber						
Capacity	800 cf	1	10,800.00	7,800.00	18,600.00	
Grating	FRP	1	2,200.00	4,550.00	6,750.00	
Media	650 CF	750	7.50	1,550.00	7,175.00	
						$32,525.00
Piping						
PVC		1	125,000.00	97,000.00	222,000.00	
Heat trace/Insulate		1	32,000.00	45,000.00	77,000.00	
						$299,000.00*
Macronutrient Tank						
Tank	5000	1	8,500.00	3,500.00	12,000.00	
Nutrient Feed Pump		1	1,500.00	3,800.00	5,300.00	
Micronutrient Tank						
Tank	3000	1	4,500.00	3,500.00	8,000.00	
Nutrient pump		1	1,500.00	3,800.00	5,300.00	
Caustic Tank						
Caustic Dosing Pump	500 gpd	1	1,150.00	3,700.00	4,850.00	
Tank	5500 gal	1	9,500.00	17,500.00	27,000.00	
Iron Tank	200 gal	1	550.00	500.00	1,050.00	
Metering pump		1	850.00	1,550.00	2,400.00	
Phosphate Tank	1000 gal	1	2,500.00	2,500.00	5,000.00	
Metering pump	50 gpd	1	850.00	1,550.00	2,400.00	
						$73,300.00
			31400	41900		81143

M-604

107% + 7843
49743

INST FACT. 2.58

Flare						
Burner	600 CFM	1	10,500.00	4,000.00	14,500.00	
Auto pilot,N-gas,air		1	6,500.00	3,500.00	10,000.00	
						$24,500.00
System Feed Pump						
Cent	1200 gpm, 40' TDH s/s	2	6,500.00	4,600.00	17,600.00	
System Recirc Pump						
Cent	3000 gpm 70' TDH s/s	2	9,500.00	7,500.00	26,500.00	
						$24,500.00
Aerobic Secondary						
Feed Pump	1100 gpm 40' TDH s/s	2	6,500.00	4,200.00	17,200.00	
T-608 Aerated Lagoon T-608	2.5 MM gal	1	100,000.00	750,000.00	850,000.00	
Floating aerators	8 x 50 hp	8	35,000.00	30,000.00	310,000.00	
						$1,177,200.00
Clarifier	275,000 gal	1	225,000.00	125,000.00	350,000.00	
Sludge pumps	2x25hp PD s/s	2	5,500.00	2,900.00	13,900.00	
Effluent pumps/wet wells	2x25hp cent	2	3,500.00	10,500.00	17,500.00	
						$381,400.00
Belt Thickener		1	210,000.00	65,000.00	275,000.00	
Piping	Yard	1	62,000.00	78,000.00	140,000.00	
Sludge holding Tanks/Load out		1	45,000.00	25,000.00	70,000.00	
						$485,000.00
Sand Filters						
VortiSand Filters	0	0	0.00	0.00	0.00	
Surge Tanks	0	0	0.00	0.00	0.00	
						$0.00
Chlorinator						
Hypo Storage/feed Tk	0	0	0.00	0.00	0.00	
Metering system		0	0.00	0.00	0.00	
Contact Tank	0	0	0.00	0.00	0.00	
C.T. Aerator	0	0	0.00	0.00	0.00	
						$0.00

Design Engineering Fee	all	1	475,000.00	475,000.00	
Design Drawings					
Shop Drawings					
Wiring Diagrams					
Power Requirements					
Operating Manuals					
Administratative					
					$475,000.00 +
Site Installation		1		475,000.00	
Site Preparation					
Off-Loading					
Pads					
Power Hook-Up					
Process Hook-Up					
Weather Protection					
Power Outage Protection					
Buildings	Control Building	1		125,000.00	
Fencing					
MCC				55,000.00	
Site Electrical					
Subcontractors					
					$655,000.00 +
Permits and Fees				35,000.00	
Taxes					
Insurance					
					$35,000.00 +
TOTAL					**$6,013,805.00**
Plus 12 % Contingency					**$6,735,461.60**

TOTAL 6,013,805
Loss OVHD 4,848,805
PIP & INST 518,100
% OF TOTAL 10 7%

```
Equipment Num        :: M-606
Eqipment Name        :: Biogas Emergency Flare
Associated PFD       :: PFD-P100-A602
Equipment Type       :: MISCELLANEOUS
Equipment Category   :: MISCELLANEOUS
Equipment Description:: FLARE AND PILOT
Number Required      :: 1
Number Spares        :: 0
Scaling Stream       :: 614
Base Cost            :: 20739.00
Cost Basis           :: VENDOR
Cost Year            :: 1998
Base for Scaling     :: 2572.000
Base Type            :: FLOW
Base Units           :: KG/HR
Install. Factor      :: 1.6800
Install. Factor Basis:: VENDOR
Scale Factor Exponent:: 0.6000
Scale Factor Basis   :: DEFAULT
Material of Const    :: SS
Date Modified        :: 01/13/99
```

Eq. No.	M-606			
Eq. Name	Biogas Handling System			
Associated PFD	A602			
Stream for Design		614		
Stream Description		Reactor Outlet		
Flow Rate		2572	Kg/hr	R9809G
Average MW		22.80		R9809G
Ave Density		0.06	lb/cf	R9809G
Flowrate		1,676	cfm	
Phoenix Bio-Systems, Inc Case 1	**$**	**13,000**		Purchase
		150	cfm	
	$	10,063		Installation w/prorated pipe & inst
		1.77		Installation Factor
Phoenix Bio-Systems, Inc Case 2	**$**	**17,000**		
		600	cfm	
	$	10,122		Installation w/prorated pipe & inst
		1.60		Installation Factor
Scaling Factor		**0.19**		
Average Installation Factor		**1.68**		
Scaled up Cost	**$**	**20,739**		for 1676 cfm
Scaling Stream		614		
Scaling Rate		2572		
Scaling Units		Kg/hr		

Case 1 - Capital Cost - Combined Anaerobic and Aerobic Treatment - NREL Dil Acid/ 2stg Softwood

CLIENT:	NREL
PHONE/FAX:	
PROJECT NUMBER:	
DATE:	5/18/98
TYPE:	Anaerobic/Aerobic
LOAD RATE:	12 g/l/d & 0.55 g/l/d
COD:	4,173 mg/l and 334 mg/l
FLOW:	766 gpm

ITEM	Description	Qty	Unit Cost	Installation	Q x UC + I	Totals
Treatability						
Laboratory Analysis						
Preliminary Design						
						$0 00
Equalization						
Dimensions	36'd x 44'h AOS SI St					
Capacity (gal)	330000 gal	1	325,000.00	86,000.00	411,000.00	
						$411,000.00
Main Reactor						
Dimensions	24'd x 60'h AOS	2				
Capacity (gal)	385,000 gal	1	350,000.00	95,000.00	445,000.00	
Distribution Manifold	ICM s/s	8	4,950.00	10,500.00	50,100.00	
Overflow collection system	PVC	2	3,500.00	7,500.00	14,500.00	
Separator	10 x 12 Custom	2	24,500.00	17,500.00	66,500.00	
Sample Cocks	1" PVC	24	50.00	1,200.00	2,400.00	
Packing	TriPack PP	2600	12.00	2,500.00	33,700.00	
Insulation	9000 ft2	9050	7.00		63,350.00	
						$675,550.00
Decarbonator						
Capacity	3,000 gal	1	14,500.00	17,500.00	32,000.00	
Dimensions	6'd x 18'h				0.00	
Distributor	s/s	1	4,850.00	8,700.00	13,550.00	
Packing	TriPack 3.5 PP	400	12.00	1,500.00	6,300.00	
Demister		1	1,500.00	1,000.00	2,500.00	
Gratings	FRP	1	3,500.00	3,000.00	6,500.00	
Fan	3 hp	1	1,250.00	2,200.00	3,450.00	
Drain						
						$64,300.00

Controls						
Field Instruments		1	85,000.00	8,500.00	93,500.00	
Pressure Ind		12	250.00	750.00	3,750.00	
Temp Indicators		12	250.00	750.00	3,750.00	
pH Controller		4	2,500.00	2,000.00	12,000.00	
Biogas Meter		1	4,300.00	1,250.00	5,550.00	
Panel		1	3,800.00	2,250.00	6,050.00	
PLC		1	9,500.00	5,500.00	15,000.00	
Control computer		1	10,500.00	7,500.00	18,000.00	
Software		1	4,000.00	12,000.00	16,000.00	
						$173,600.00
Temp Control						
Hot water heater		0	0.00	0.00	0.00	
Heat Exch		2	6,500.00	14,500.00	27,500.00	
						$27,500.00
BioGas Scrubber						
Capacity	300 cf	1	6,500.00	7,600.00	14,100.00	
Grating	FRP	1	1,800.00	3,350.00	5,150.00	
Media	280	280	7.50	1,550.00	3,650.00	
						$22,900.00
Piping						
PVC		1	75,000.00	55,000.00	130,000.00	
Heat trace/Insulate		1	12,500.00	28,000.00	40,500.00	
						$170,500.00
Macronutrient Tank						
Tank	5000	1	8,500.00	3,500.00	12,000.00	
Nutrient Feed Pump		1	1,500.00	3,800.00	5,300.00	
Micronutrient Tank						
Tank	3000	1	4,500.00	3,500.00	8,000.00	
Nutrient pump		1	1,500.00	3,800.00	5,300.00	
Caustic Tank						
Caustic Dosing Pump	500 gpd	1	1,150.00	3,700.00	4,850.00	
Tank	5500 gal	1	9,500.00	17,500.00	27,000.00	
Iron Tank	200 gal	1	550.00	500.00	1,050.00	
Metering pump		1	850.00	1,550.00	2,400.00	
Phosphate Tank	1000 gal	1	2,500.00	2,500.00	5,000.00	
Metering pump	50 gpd	1	850.00	1,550.00	2,400.00	
			$31,400	41900		$73,300.00

M604

Flare						
Burner	150 CFM	1	8,500.00	4,000.00	12,500.00	
Auto pilot,N-gas,air		1	4,500.00	3,500.00 + 2562.5 $10062.50	8,000.00	$20,500.00
System Feed Pump						
Cent	766 gpm, 40' TDH s/s	2	4,900.00	2,700.00	12,500.00	
System Recirc Pump						
Cent	1500 gpm 70' TDH s/s	2	8,000.00	4,500.00	20,500.00	$20,500.00
Aerobic Secondary						
Feed Pump	766 gpm 40' TDH s/s	2	4,900.00	3,500.00	13,300.00	
Aerated Lagoon	0.9 mgal	1		500,000.00	500,000.00	
Floating aerators	4x25 hp, 2 x 50 hp	6	25,000.00	22,000.00	172,000.00	$685,300.00
Clarifier	180,000 gal	1	155,000.00	115,000.00	270,000.00	
Sludge pumps	2x25hp PD s/s	2	5,500.00	2,900.00	13,900.00	
Effluent pumps/wet wells	2x25hp cent	2	3,500.00	10,500.00	17,500.00	$301,400.00
Belt Thickener		1	110,000.00	42,000.00	152,000.00	
Piping	Yard	1	42,000.00	67,000.00	109,000.00	
Sludge holding Tanks/Load out		1	45,000.00	25,000.00	70,000.00	$331,000.00
Sand Filters						
VortiSand Filters	0	0	0.00	0.00	0.00	
Surge Tanks	0	0	0.00	0.00	0.00	$0.00
Chlorinator						
Hypo Storage/feed Tk	0	0	0.00	0.00	0.00	
Metering system		0	0.00	0.00	0.00	
Contact Tank	0	0	0.00	0.00	0.00	
C.T. Aerator	0	0	0.00	0.00	0.00	$0.00

Design Engineering Fee	all	1	250,000.00	250,000.00	
Design Drawings					
Shop Drawings					
Wiring Diagrams					
Power Requirements					
Operating Manuals					
Administratative					
					$250,000.00
Site Installation		1		295,000.00	
Site Preparation					
Off-Loading					
Pads					
Power Hook-Up					
Process Hook-Up					
Weather Protection					
Power Outage Protection					
Buildings	Control Building	1		125,000.00	
Fencing					
MCC				55,000.00	
Site Electrical					
Subcontractors					
					$475,000.00
Permits and Fees				35,000.00	
Taxes					
Insurance					
					$35,000.00
TOTAL					**$3,737,350.0**
Plus 12 % Contingency					**$4,185,832.0**

less other 3,737,350
PIPING * 2,977,350
PIPING % 371,60°
12.5%

Case 2- Capital Cost - Combined Anaerobic and Aerobic Treatment NREL Corinne Sutton Parks Area

CLIENT:	**NREL**
PHONE/FAX:	
PROJECT NUMBER:	
DATE:	5/18/98
TYPE:	Anaerobic/Aerobic
LOAD RATE:	12 g/l/d & 0.55 g/l/d
COD:	6510 mg/l & 520 mg/l
FLOW:	1105 gpm

ITEM	Description	Qty	Unit Cost	Installation	Q x UC + I	Totals
Treatability						
Laboratory Analysis						
Preliminary Design						$0.00
Equalization						
Dimensions						
Capacity (gal)	500,000	1	450,000.00	100,000.00	550,000.00	$550,000.00
Main Reactor						
Dimensions	26' d x 60'hAOS aqua St	4				
Capacity (gal)	950,000	1	750,000.00	175,000.00	925,000.00	
Distribution Manifold	ICM s/s	16	4,950.00	32,500.00	111,700.00	
Overflow collection system	PVC	4	15,500.00	22,000.00	84,000.00	
Separator	10 x 12 FRP Custom	4	28,000.00	38,700.00	150,700.00	
Sample Cocks T-606	1" PVC	36	50.00	1,200.00	3,000.00	
Packing	TriPack PP	6370	12.00	2,500.00	78,940.00	
Insulation		19600	7.00		137,200.00	$1,490,540.00
			1,218,640	271,900 est 159,265 piping est	431,165	1649305 1 35,NST
Decarbonator						
Capacity	5,000 gal	1	22,500.00	27,500.00	50,000.00	
Dimensions	8'd x 18				0.00	
Distributor	s/s	1	7,590.00	9,800.00	17,390.00	
Packing	TriPack 3.5 PP	700	12.00	1,500.00	9,900.00	
Demister		1	2,500.00	1,000.00	3,500.00	
Gratings	FRP	1	4,500.00	3,000.00	7,500.00	
Fan	4 hp	1	1,250.00	2,200.00	3,450.00	
Drain						
			46,740	45,000		$91,740.00

Controls						
Field Instruments		1	85,000.00	8,500.00	93,500.00	
Pressure Ind		18	250.00	750.00	5,250.00	
Temp Indicators		18	250.00	750.00	5,250.00	
pH Controller		6	2,500.00	2,000.00	17,000.00	
Biogas Meter		1	4,300.00	1,250.00	5,550.00	
Panel		1	3,800.00	2,250.00	6,050.00	
PLC		1	9,500.00	5,500.00	15,000.00	
Control computer		1	10,500.00	7,500.00	18,000.00	
Software		1	4,000.00	12,000.00	16,000.00	
						$181,600.00 *
Temp Control						
Hot water heater		0	0.00	0.00	0.00	
Heat Exch		2	12,500.00	12,500.00	37,500.00	
						$37,500.00 *
BioGas Scrubber						
Capacity	800 cf	1	10,800.00	7,800.00	18,600.00	
Grating	FRP	1	2,200.00	4,550.00	6,750.00	
Media	650 CF	750	7.50	1,550.00	7,175.00	
						$32,525.00
Piping						
PVC		1	125,000.00	97,000.00	222,000.00	
Heat trace/Insulate		1	32,000.00	45,000.00	77,000.00	
						$299,000.00 *
Macronutrient Tank						
Tank	5000	1	8,500.00	3,500.00	12,000.00	
Nutrient Feed Pump		1	1,500.00	3,800.00	5,300.00	
Micronutrient Tank						
Tank	3000	1	4,500.00	3,500.00	8,000.00	
Nutrient pump		1	1,500.00	3,800.00	5,300.00	
Caustic Tank						
Caustic Dosing Pump	500 gpd	1	1,150.00	3,700.00	4,850.00	
Tank	5500 gal	1	9,500.00	17,500.00	27,000.00	
Iron Tank	200 gal	1	550.00	500.00	1,050.00	
Metering pump		1	850.00	1,550.00	2,400.00	
Phosphate Tank	1000 gal	1	2,500.00	2,500.00	5,000.00	
Metering pump	50 gpd	1	850.00	1,550.00	2,400.00	
						$73,300.00
			31400	41900		81143
				10% + 7843		
				49743		

INST FACT. 2.58

	Flare					
-606	Burner M606	600 CFM	1	10,500.00	4,000.00	14,500.00
	Auto pilot,N-gas,air		1	6,500.00	3,500.00	10,000.00
				10.7%	+2621.50	$24,500.00
					10121.50	
	System Feed Pump					
	Cent	1200 gpm, 40' TDH s/s	2	6,500.00	4,600.00	17,600.00
	System Recirc Pump					
	Cent	3000 gpm 70' TDH s/s	2	9,500.00	7,500.00	26,500.00
						$24,500.00
	Aerobic Secondary					
	Feed Pump	1100 gpm 40' TDH s/s	2	6,500.00	4,200.00	17,200.00
T-608	Aerated Lagoon T 608	2.5 MM gal	1	100,000.00	750,000.00	850,000.00
	Floating aerators	8 x 50 hp	8	35,000.00	30,000.00	310,000.00
						$1,177,200.00
	Clarifier	275,000 gal	1	225,000.00	125,000.00	350,000.00
	Sludge pumps	2x25hp PD s/s	2	5,500.00	2,900.00	13,900.00
	Effluent pumps/wet wells	2x25hp cent	2	3,500.00	10,500.00	17,500.00
						$381,400.00
	Belt Thickener		1	210,000.00	65,000.00	275,000.00
	Piping	Yard	1	62,000.00	78,000.00	140,000.00
	Sludge holding Tanks/Load out		1	45,000.00	25,000.00	70,000.00
						$485,000.00
	Sand Filters					
	VortiSand Filters	0	0	0.00	0.00	0.00
	Surge Tanks	0	0	0.00	0.00	0.00
						$0.00
	Chlorinator					
	Hypo Storage/feed Tk	0	0	0.00	0.00	0.00
	Metering system		0	0.00	0.00	0.00
	Contact Tank	0	0	0.00	0.00	0.00
	C.T. Aerator	0	0	0.00	0.00	0.00
						$0.00

Design Engineering Fee	all	1	475,000.00	475,000.00	
Design Drawings					
Shop Drawings					
Wiring Diagrams					
Power Requirements					
Operating Manuals					
Administratative					
					$475,000.00
Site Installation		1		475,000.00	
Site Preparation					
Off-Loading					
Pads					
Power Hook-Up					
Process Hook-Up					
Weather Protection					
Power Outage Protection					
Buildings	Control Building	1		125,000.00	
Fencing					
MCC				55,000.00	
Site Electrical					
Subcontractors					
					$655,000.00
Permits and Fees				35,000.00	
Taxes					
Insurance					
					$35,000.00
TOTAL					**$6,013,805.00**
Plus 12 % Contingency					**$6,735,461.60**

TOTAL 6,013,805
Less OVHD 4,848,805
PIPE & INST 518,100
% OF TOTAL 10.7%

Wooley, Robert

From: Dick.Voiles@merrick.com
Sent: Monday, November 16, 1998 3:00 PM
To: robert_wooley@nrel.gov
Cc: Jim.Sharpe@merrick.com; James.Kassian@merrick.com; Fran.Ferraro@merrick.com; Dick.Voiles@merrick.com
Subject: Anaerobic Digestor Offgas

I just spoke to Joe about an emergency flare on this gas and he said it is essential. So we better add it to the estimate. Joe has already given us a price that we can scale from.

These are stainless steel and are 12 to 25 feet tall. Since they are low pressure they are large in diameter - I would not doubt that ours could hit 30" in diameter. In a refinery or gas plant, flares are a couple of hundred of feet tall based on the largest ground level radiation not frying any operators. I suggest we add this flare to our further work list as our combustibles loading is a lot higher than Joe is used to seeing.

Joe explained that the scrubber on this gas is actually an iron sponge absorber. When I approached SulfaTreat (a proprietary iron sponge process vendor) with our H2S loading they eliminated themselves as not being practical for such a large load. This ion exchange rinse is really a problem.

Equipment Num	:: M-612
Eqipment Name	:: Filter Precoat System
Associated PFD	:: PFD-P100-A603
Equipment Category	:: MISCELLANEOUS
Equipment Description	:: Tank, Agitator, Pump
Number Required	:: 1
Number Spares	:: 0
Base Cost	:: 3000.00
Cost Basis	:: MERRICK98
Cost Year	:: 1998
Install. Factor	:: 1.4000
Material of Const	:: CS
Utility Calc.	:: ASPEN FORT BLCK
Utility Stream	:: WM612
Utility Type	:: POWER
Date Modified	:: 12/22/98
Notes	:: Expected Power Req: 4 kW.

Eq. No.	M-612		
Eq. Name	Filter Precoat System		
Associated PFD	A603		
Stream for Design	NA		Too small to Scale
Power Requirement		5 hp	Estimated
Cost	**$**	**3,000**	Merrick Estimate for Small Tank and Pump
Year		**1998**	
Scaling Stream		NA	

Equipment Num	:: P-602
Eqipment Name	:: Anaerobic Reactor Feed Pump
Associated PFD	:: PFD-P100-A602
Equipment Type	:: CENTRIFUGAL
Equipment Category	:: PUMP
Equipment Description	:: 876 gpm, 150 ft head
Number Required	:: 1
Number Spares	:: 1
Scaling Stream	:: 612
Base Cost	:: 11400.00
Cost Basis	:: ICARUS
Cost Year	:: 1997
Base for Scaling	:: 188129.000
Base Type	:: FLOW
Base Units	:: KG/HR
Install. Factor	:: 2.8000
Install. Factor Basis	:: DELTA-T98
Scale Factor Exponent	:: 0.7900
Scale Factor Basis	:: GARRETT
Material of Const	:: CS
Utility Calc.	:: ASPEN FORT BLCK
Utility Stream	:: WP602
Utility Type	:: POWER
Date Modified	:: 12/22/98
Notes	:: Expected Power Req: 41 kW.

Eq. No.	P-602		
Eq. Name	Anerobic Digestor Feed Pump		
Associated PFD	A602		
Stream for Design	612		
Stream Description	Pump Inlet		
Flow Rate	188129	Kg/hr	R9809G
Liquid Density	0.95	g/cm^3	R9809G
Solid Density	0.00	g/cm^3	R9809G
Frac Solids	0.000		
Flowrate	876.3	gpm	
Outlet Head	150.0	ft	
Estimated Power	55	hp	
	41	kW	
Cost Estimation			
ICARUS- 1997	**$ 11,400**	CS	
	$ 10,600	CI	
	$ 15,200	SS	
Scaling Stream	612		
Scaling Rate	188129		
Scaling Units	Kg/hr		

P-602 CP - 100 P-602

EQUIPMENT ITEM DESIGN DATA SHEET

ANSI

NO.	ITEM	VALUE SPECIFIED BY USER	VALUE USED BY SYSTEM	UNITS
	EQUIPMENT DESIGN DATA			
1.	MATERIAL SYMBOL	CS	CS	
2.	DESIGN TEMPERATURE		120.0	DEG F
3.	DESIGN PRESSURE		150.0	PSIG
4.	HEAD	150.0	150.0	FEET
5.	ASA RATING		150	
6.	DRIVER POWER		50.00	HP
7.	DRIVER SPEED		1800.0	RPM
8.	DRIVER TYPE SYMBOL		MOTOR	
9.	PUMP EFFICIENCY		82.00	PERCENT
	SEAL DATA			
10.	SEAL TYPE		SNGL	
11.	PRIMARY SEAL PIPE PLAN		11	
12.	SEAL PIPING PIPE TYPE		WELD	
13.	SEAL PIPING MATERIAL		A 106	
	PROCESS DESIGN DATA			
14.	CAPACITY	876.0	876.0	GPM
15.	FLUID DENSITY		62.43	PCF
16.	FLUID VISCOSITY		1.000	CPOISE
17.	RESULTING DESIGN VALUE		0.0571	HP/GPM
18.	CAPACITY*HEAD		131400	GPM -FT
	WEIGHT DATA			
19.	PUMP		530	LBS
20.	MOTOR		530	LBS
21.	BASE PLATE		110	LBS
22.	FITTINGS, ETC.		100	LBS
23.	TOTAL WEIGHT		1300	LBS
	VENDOR COST DATA			
24.	MOTOR		2100	USD
25.	MATERIAL COMPONENT COST		2055	USD
26.	SHOP MANPOWER COST		2093	USD
27.	SHOP OVERHEAD		2135	USD
28.	GENERAL OFFICE OVERHEAD		1425	USD
29.	PROFIT		1592	USD
30.	TOTAL COST		11400	USD
31.	RESULTING UNIT COST		8.769	USD/LBS
32.	RESULTING UNIT COST		13.01	USD/GPM
33.	RESULTING UNIT COST		228.0	USD/HP

	MATERIAL USD	MANPOWER USD	MANPOWER MANHOURS	L/M RATIO USD/USD
EQUIPMENT&SETTING	11400.	935.	50	0.082
PIPING	12288.	4532.	245	0.369
CIVIL	356.	696.	44	1.954
STRUCTURAL STEEL	0.	0.	0	0.000
INSTRUMENTATION	5963.	1466.	76	0.246
ELECTRICAL	427.	697.	35	1.631
INSULATION	0.	0.	0	0.000
PAINT	475.	777.	57	1.636
SUBTOTAL	30910.	9103.	507	0.294

INSTALLED DIRECT COST 40000. INST'L COST/PE RATIO 3.509

IPE Version: 4.0
Estimate Base: 1st Quarter 1997 (4.0)
June 30, 1997
Run Date: 16NOV98-11:53:19

Equipment Num	:: P-606
Eqipment Name	:: Aerobic Digestor Feed Pump
Associated PFD	:: PFD-P100-A602
Equipment Type	:: CENTRIFUGAL
Equipment Category	:: PUMP
Equipment Description	:: 830 gpm, 150 ft head
Number Required	:: 1
Number Spares	:: 1
Scaling Stream	:: 618
Base Cost	:: 10700.00
Cost Basis	:: ICARUS
Cost Year	:: 1997
Base for Scaling	:: 185782.000
Base Type	:: FLOW
Base Units	:: KG/HR
Install. Factor	:: 2.8000
Install. Factor Basis	:: DELTA-T98
Scale Factor Exponent	:: 0.7900
Scale Factor Basis	:: GARRETT
Material of Const	:: CS
Utility Calc.	:: ASPEN FORT BLCK
Utility Stream	:: WP606
Utility Type	:: POWER
Date Modified	:: 12/22/98
Notes	:: Expected Power Req: 41 kW.

Eq. No.	P-606		
Eq. Name	Aerobic Digestor Feed Pump		
Associated PFD	A602		
Stream for Design	618		
Stream Description	Pump Inlet		
Flow Rate	185782	Kg/hr	R9809G
Liquid Density	0.98	g/cm^3	R9809G
Solid Density	0.00	g/cm^3	R9809G
Frac Solids	0.000		
Flowrate	831.1	gpm	
Outlet Pressure	4.2	atm	
Outlet Head	150.0	ft	
Estimated Power	54	hp	
	41	kW	
ICARUS- 1997	**$10,700**	CS	
	$9,900	CI	
	$14,500	SS	
Scaling Stream	618		
Scaling Rate	185782		
Scaling Units	Kg/hr		

P-606 CP - 100 P-606

EQUIPMENT ITEM DESIGN DATA SHEET

ANSI

NO.	ITEM	VALUE SPECIFIED BY USER	VALUE USED BY SYSTEM	UNITS
	EQUIPMENT DESIGN DATA			
1.	MATERIAL SYMBOL	CS	CS	
2.	DESIGN TEMPERATURE		120.0	DEG F
3.	DESIGN PRESSURE		150.0	PSIG
4.	HEAD	150.0	150.0	FEET
5.	ASA RATING		150	
6.	DRIVER POWER		40.00	HP
7.	DRIVER SPEED		1800.0	RPM
8.	DRIVER TYPE SYMBOL		MOTOR	
9.	PUMP EFFICIENCY		82.00	PERCENT
	SEAL DATA			
10.	SEAL TYPE		SNGL	
11.	PRIMARY SEAL PIPE PLAN		11	
12.	SEAL PIPING PIPE TYPE		WELD	
13.	SEAL PIPING MATERIAL		A 106	
	PROCESS DESIGN DATA			
14.	CAPACITY	831.0	831.0	GPM
15.	FLUID DENSITY		62.43	PCF
16.	FLUID VISCOSITY		1.000	CPOISE
17.	RESULTING DESIGN VALUE		0.0481	HP/GPM
18.	CAPACITY*HEAD		124650	GPM -FT
	WEIGHT DATA			
19.	PUMP		530	LBS
20.	MOTOR		450	LBS
21.	BASE PLATE		110	LBS
22.	FITTINGS, ETC.		100	LBS
23.	TOTAL WEIGHT		1200	LBS
	VENDOR COST DATA			
24.	MOTOR		1700	USD
25.	MATERIAL COMPONENT COST		2052	USD
26.	SHOP MANPOWER COST		2050	USD
27.	SHOP OVERHEAD		2091	USD
28.	GENERAL OFFICE OVERHEAD		1342	USD
29.	PROFIT		1465	USD
30.	TOTAL COST		10700	USD
31.	RESULTING UNIT COST		8.917	USD/LBS
32.	RESULTING UNIT COST		12.88	USD/GPM
33.	RESULTING UNIT COST		267.5	USD/HP

	MATERIAL	M A N P O W E R		L/M RATIO
	USD	USD	MANHOURS	USD/USD
EQUIPMENT&SETTING	10700.	856.	46	0.080
PIPING	12276.	4521.	244	0.368
CIVIL	328.	797.	51	2.427
STRUCTURAL STEEL	0.	0.	0	0.000
INSTRUMENTATION	5963.	1466.	76	0.246
ELECTRICAL	427.	697.	35	1.631
INSULATION	0.	0.	0	0.000
PAINT	472.	770.	56	1.632
SUBTOTAL	30166.	9107.	508	0.302

INSTALLED DIRECT COST 39300. INST'L COST/PE RATIO 3.673

IPE Version: 4.0
Estimate Base: 1st Quarter 1997 (4.0)
June 30, 1997
Run Date: 16NOV98-11:53:19

Equipment Num	:: P-608
Eqipment Name	:: Aerobic Sludge Recycle Pump
Associated PFD	:: PFD-P100-A603
Equipment Type	:: SLURRY
Equipment Category	:: PUMP
Equipment Description	:: 2.5 gpm, 150 ft head
Number Required	:: 1
Number Spares	:: 0
Scaling Stream	:: 625
Base Cost	:: 11100.00
Cost Basis	:: ICARUS
Cost Year	:: 1997
Base for Scaling	:: 5862.000
Base Type	:: FLOW
Base Units	:: KG/HR
Install. Factor	:: 1.4000
Install. Factor Basis	:: DELTA-T98
Scale Factor Exponent	:: 0.7900
Scale Factor Basis	:: GARRETT
Material of Const	:: SS316
Utility Calc.	:: ASPEN FORT BLCK
Utility Stream	:: WP608
Utility Type	:: POWER
Date Modified	:: 12/22/98
Notes	:: Expected Power Req: 1 kW. Operates only part time. Use same pump as P-610. Therefore, no spare.

Eq. No.	P-608		
Eq. Name	Aerobic Sludge Recycle Pump		
Associated PFD	A603		
Stream for Design	625		Operates Part time, same as P-610, serves as spare
Stream Description	Pump Inlet		
Flow Rate	5862	Kg/hr	R9809G
Average Density	1.02	g/cm^3	R9809G
Frac Solids	0.046		
Flowrate	25.3	gpm	
Outlet Head	150.0	ft	
Estimated Power	2	hp	
	1	kW	
Slurry Pump			
Cost Estimation			
ICARUS- 1997	**$ 11,100**	SS316	Only material avilable in ICARUS for Slurry Pump
Scaling Stream	625		
Scaling Rate	5862		
Scaling Units	Kg/hr		

P-610 P - 100 P-610

COMPONENT DATA SHEET

SLURRY

CODE OF ACCOUNT: 167

COMPONENT DESIGN DATA:

MATERIAL	SS316
CAPACITY	25.00 GPM
HEAD	150.00 FEET
DRIVER POWER	1.50 HP
SPEED	1800.00 RPM

COST DATA:

ESTIMATED PURCHASE COST USD 11100.

	MATERIAL USD	MANPOWER USD	MANPOWER MANHOURS	L/M RATIO USD/USD
EQUIPMENT&SETTING	11100.	186.	10	0.017
PIPING	2294.	3848.	207	1.678
CIVIL	127.	430.	27	3.385
STRUCTURAL STEEL	0.	0.	0	0.000
INSTRUMENTATION	1273.	54.	3	0.043
ELECTRICAL	393.	668.	34	1.699
INSULATION	0.	0.	0	0.000
PAINT	0.	0.	0	0.000
SUBTOTAL	15187.	5186.	281	0.341

INSTALLED DIRECT COST 20400. INST'L COST/PE RATIO 1.838

IPE Version: 4.0
Estimate Base: 1st Quarter 1997 (4.0)
June 30, 1997
Run Date: 16NOV98-11:53:19

Equipment Num	:: P-610
Eqipment Name	:: Aerobic Sludge Pump
Associated PFD	:: PFD-P100-A603
Equipment Type	:: SLURRY
Equipment Category	:: PUMP
Equipment Description	:: 25.3 gpm, 150 ft head
Number Required	:: 1
Number Spares	:: 0
Scaling Stream	:: 625
Base Cost	:: 11100.00
Cost Basis	:: ICARUS
Cost Year	:: 1997
Base for Scaling	:: 5862.000
Base Type	:: FLOW
Base Units	:: KG/HR
Install. Factor	:: 1.4000
Install. Factor Basis	:: DELTA-T98
Scale Factor Exponent	:: 0.7900
Scale Factor Basis	:: GARRETT
Material of Const	:: SS316
Utility Calc.	:: ASPEN FORT BLCK
Utility Stream	:: WP610
Utility Type	:: POWER
Date Modified	:: 12/22/98
Notes	:: Expected power Req: 1 kW. SS 316 only material available in Icarus. P-608 serves as a spare.

Eq. No.	P-610			
Eq. Name	Aerobic Sludge Pump			
Associated PFD	A603			
Stream for Design		625		
Stream Description		Pump Inlet		
Flow Rate		5862	Kg/hr	R9809G
Average Density		1.02	g/cm^3	R9809G
Frac Solids		0.046		
Flowrate		25.3	gpm	
Outlet Head		150.0	ft	
Estimated Power		2	hp	
		1	kW	
Slurry Pump				
Cost Estimation				
ICARUS- 1997	**$**	**11,100**	SS316	Only material available in ICARUS for Slurry Pump
Scaling Stream		625		
Scaling Rate		5862		
Scaling Units		Kg/hr		

P-610 P - 100 P-610

COMPONENT DATA SHEET

SLURRY

CODE OF ACCOUNT: 167

COMPONENT DESIGN DATA:

MATERIAL	SS316
CAPACITY	25.00 GPM
HEAD	150.00 FEET
DRIVER POWER	1.50 HP
SPEED	1800.00 RPM

COST DATA:

ESTIMATED PURCHASE COST USD 11100.

	MATERIAL USD	MANPOWER USD	MANPOWER MANHOURS	L/M RATIO USD/USD
EQUIPMENT&SETTING	11100.	186.	10	0.017
PIPING	2294.	3848.	207	1.678
CIVIL	127.	430.	27	3.385
STRUCTURAL STEEL	0.	0.	0	0.000
INSTRUMENTATION	1273.	54.	3	0.043
ELECTRICAL	393.	668.	34	1.699
INSULATION	0.	0.	0	0.000
PAINT	0.	0.	0	0.000
SUBTOTAL	15187.	5186.	281	0.341

INSTALLED DIRECT COST 20400. INST'L COST/PE RATIO 1.838

IPE Version: 4.0
Estimate Base: 1st Quarter 1997 (4.0)
June 30, 1997
Run Date: 16NOV98-11:53:19

Equipment Num	:: P-611
Eqipment Name	:: Aerobic Digestion Outlet Pump
Associated PFD	:: PFD-P100-A603
Equipment Type	:: CENTRIFUGAL
Equipment Category	:: PUMP
Equipment Description	:: 828 gpm, 150' head
Number Required	:: 1
Number Spares	:: 1
Scaling Stream	:: 621
Base Cost	:: 10700.00
Cost Basis	:: ICARUS
Cost Year	:: 1997
Base for Scaling	:: 187827.000
Base Type	:: FLOW
Base Units	:: KG/HR
Install. Factor	:: 2.8000
Install. Factor Basis	:: DELTA-T98
Scale Factor Exponent	:: 0.7900
Scale Factor Basis	:: GARRETT
Material of Const	:: CS
Utility Calc.	:: ASPEN FORT BLCK
Utility Stream	:: WP611
Utility Type	:: POWER
Date Modified	:: 12/22/98
Notes	:: Expected power Req: 41 kW.

Eq. No.	P-611		
Eq. Name	Aerobic Digestion Outlet Pump		
Associated PFD	A603		
Stream for Design	621		
Stream Description	Pump Inlet		
Flow Rate	187827	Kg/hr	R9809G
Liquid Density	1.00	g/cm^3	R9809G
Frac Solids	0.001		
Flowrate	828.4	gpm	
Outlet Head	150	ft	
Estimated Power	55	hp	
	41	kW	
Cost Estimation			
ICARUS- 1997	**$ 10,700**	CS	
	$ 9,900	CI	
	$ 14,500	SS	
Scaling Stream	621		
Scaling Rate	187827		
Scaling Units	Kg/hr		

P-611 CP - 100 P-611

EQUIPMENT ITEM DESIGN DATA SHEET

ANSI

NO.	ITEM	VALUE SPECIFIED BY USER	VALUE USED BY SYSTEM	UNITS
	EQUIPMENT DESIGN DATA			
1.	MATERIAL SYMBOL		CS	
2.	DESIGN TEMPERATURE		120.0	DEG F
3.	DESIGN PRESSURE		150.0	PSIG
4.	HEAD	150.0	150.0	FEET
5.	ASA RATING		150	
6.	DRIVER POWER		40.00	HP
7.	DRIVER SPEED		1800.0	RPM
8.	DRIVER TYPE SYMBOL		MOTOR	
9.	PUMP EFFICIENCY		82.00	PERCENT
	SEAL DATA			
10.	SEAL TYPE		SNGL	
11.	PRIMARY SEAL PIPE PLAN		11	
12.	SEAL PIPING PIPE TYPE		WELD	
13.	SEAL PIPING MATERIAL		A 106	
	PROCESS DESIGN DATA			
14.	CAPACITY	828.0	828.0	GPM
15.	FLUID DENSITY		62.43	PCF
16.	FLUID VISCOSITY		1.000	CPOISE
17.	RESULTING DESIGN VALUE		0.0483	HP/GPM
18.	CAPACITY*HEAD		124200	GPM -FT
	WEIGHT DATA			
19.	PUMP		530	LBS
20.	MOTOR		450	LBS
21.	BASE PLATE		110	LBS
22.	FITTINGS, ETC.		100	LBS
23.	TOTAL WEIGHT		1200	LBS
	VENDOR COST DATA			
24.	MOTOR		1700	USD
25.	MATERIAL COMPONENT COST		2052	USD
26.	SHOP MANPOWER COST		2047	USD
27.	SHOP OVERHEAD		2088	USD
28.	GENERAL OFFICE OVERHEAD		1341	USD
29.	PROFIT		1472	USD
30.	TOTAL COST		10700	USD
31.	RESULTING UNIT COST		8.917	USD/LBS
32.	RESULTING UNIT COST		12.92	USD/GPM
33.	RESULTING UNIT COST		267.5	USD/HP

	MATERIAL	M A N P O W E R		L/M RATIO
	USD	USD	MANHOURS	USD/USD
EQUIPMENT&SETTING	10700.	856.	46	0.080
PIPING	12276.	4521.	244	0.368
CIVIL	328.	797.	51	2.427
STRUCTURAL STEEL	0.	0.	0	0.000
INSTRUMENTATION	5963.	1466.	76	0.246
ELECTRICAL	427.	697.	35	1.631
INSULATION	0.	0.	0	0.000
PAINT	472.	770.	56	1.632
SUBTOTAL	30166.	9107.	508	0.302

INSTALLED DIRECT COST 39300. INST'L COST/PE RATIO 3.673

IPE Version: 4.0
Estimate Base: 1st Quarter 1997 (4.0)
June 30, 1997
Run Date: 16NOV98-11:53:19

Equipment Num	:: P-614
Eqipment Name	:: Sludge Filtrate Recycle Pump
Associated PFD	:: PFD-P100-A603
Equipment Type	:: CENTRIFUGAL
Equipment Category	:: PUMP
Equipment Description	:: 22 gpm, 150' head
Number Required	:: 1
Number Spares	:: 1
Scaling Stream	:: 627
Base Cost	:: 6100.00
Cost Basis	:: ICARUS
Cost Year	:: 1997
Base for Scaling	:: 4885.000
Base Type	:: FLOW
Base Units	:: KG/HR
Install. Factor	:: 2.8000
Install. Factor Basis	:: DELTA-T98
Scale Factor Exponent	:: 0.7900
Scale Factor Basis	:: GARRETT
Material of Const	:: CS
Utility Calc.	:: ASPEN FORT BLCK
Utility Stream	:: WP614
Utility Type	:: POWER
Date Modified	:: 12/22/98
Notes	:: Expected Power Req: 1 kW.

Eq. No.	P-614		
Eq. Name	Sludge Filtrate Recycle Pump		
Associated PFD	A603		
Stream for Design	627		
Stream Description	Pump Inlet		
Flow Rate	4885	Kg/hr	R9809G
Liquid Density	1.00	g/cm^3	R9809G
Frac Solids	0.000		
Flowrate	21.6	gpm	
Outlet Head	150.0	ft	
Estimated Power	1.4	hp	
	1.1	kW	
Cost Estimation			
ICARUS- 1997	**$ 6,100**	CS	
	$ 5,600	CI	
	$ 8,600	SS	
Scaling Stream	627		
Scaling Rate	4885		
Scaling Units	Kg/hr		

P-614 CP - 100 P-614

EQUIPMENT ITEM DESIGN DATA SHEET

ANSI

NO.	ITEM	VALUE SPECIFIED BY USER	VALUE USED BY SYSTEM	UNITS
	EQUIPMENT DESIGN DATA			
1.	MATERIAL SYMBOL		CS	
2.	DESIGN TEMPERATURE		120.0	DEG F
3.	DESIGN PRESSURE		150.0	PSIG
4.	HEAD	150.0	150.0	FEET
5.	ASA RATING		150	
6.	DRIVER POWER		2.000	HP
7.	DRIVER SPEED		1800.0	RPM
8.	DRIVER TYPE SYMBOL		MOTOR	
9.	PUMP EFFICIENCY		50.00	PERCENT
	SEAL DATA			
10.	SEAL TYPE		SNGL	
11.	PRIMARY SEAL PIPE PLAN		11	
12.	SEAL PIPING PIPE TYPE		WELD	
13.	SEAL PIPING MATERIAL		A 106	
	PROCESS DESIGN DATA			
14.	CAPACITY	22.00	22.00	GPM
15.	FLUID DENSITY		62.43	PCF
16.	FLUID VISCOSITY		1.000	CPOISE
17.	RESULTING DESIGN VALUE		0.0909	HP/GPM
18.	CAPACITY*HEAD		3300	GPM -FT
	WEIGHT DATA			
19.	PUMP		440	LBS
20.	MOTOR		70	LBS
21.	BASE PLATE		90	LBS
22.	FITTINGS, ETC.		80	LBS
23.	TOTAL WEIGHT		680	LBS
	VENDOR COST DATA			
24.	MOTOR		190	USD
25.	MATERIAL COMPONENT COST		1680	USD
26.	SHOP MANPOWER COST		1302	USD
27.	SHOP OVERHEAD		1328	USD
28.	GENERAL OFFICE OVERHEAD		765	USD
29.	PROFIT		835	USD
30.	TOTAL COST		6100	USD
31.	RESULTING UNIT COST		8.971	USD/LBS
32.	RESULTING UNIT COST		277.3	USD/GPM
33.	RESULTING UNIT COST		3050.0	USD/HP

	MATERIAL USD	MANPOWER USD	MANPOWER MANHOURS	L/M RATIO USD/USD
EQUIPMENT&SETTING	6100.	458.	25	0.075
PIPING	1525.	3654.	196	2.397
CIVIL	131.	438.	28	3.341
STRUCTURAL STEEL	0.	0.	0	0.000
INSTRUMENTATION	4032.	1466.	76	0.364
ELECTRICAL	393.	668.	34	1.699
INSULATION	0.	0.	0	0.000
PAINT	98.	211.	15	2.159
SUBTOTAL	12279.	6896.	374	0.562

INSTALLED DIRECT COST 19200. INST'L COST/PE RATIO 3.148

IPE Version: 4.0
Estimate Base: 1st Quarter 1997 (4.0)
June 30, 1997
Run Date: 16NOV98-11:53:19

Equipment Num	:: P-616
Eqipment Name	:: Treated Water Pump
Associated PFD	:: PFD-P100-A603
Equipment Type	:: CENTRIFUGAL
Equipment Category	:: PUMP
Equipment Description	:: 803 gpm, 100 ft head
Number Required	:: 1
Number Spares	:: 1
Scaling Stream	:: 624
Base Cost	:: 10600.00
Cost Basis	:: ICARUS
Cost Year	:: 1997
Base for Scaling	:: 181965.000
Base Type	:: FLOW
Base Units	:: KG/HR
Install. Factor	:: 2.8000
Install. Factor Basis	:: DELTA-T98
Scale Factor Exponent	:: 0.7900
Scale Factor Basis	:: GARRETT
Material of Const	:: CS
Utility Calc.	:: ASPEN FORT BLCK
Utility Stream	:: WP616
Utility Type	:: POWER
Date Modified	:: 12/22/98
Notes	:: Expected Power Req: 40 kW.

Eq. No.	P-616		
Eq. Name	Treated Water Pump		
Associated PFD	A603		
Stream for Design	624		
Stream Description	Pump Inlet		
Flow Rate	181965	Kg/hr	R9809G
Liquid Density	1.00	g/cm^3	R9809G
Frac Solids	0.000		
Flowrate	803.4	gpm	
Outlet Head	150.0	ft	
Estimated Power	53	hp	
	40	kW	
Cost Estimation			
ICARUS- 1997	**$ 9,900**	CS	
	$ 10,600	CI	
	$ 14,400	SS	
Scaling Stream	624		
Scaling Rate	181965		
Scaling Units	Kg/hr		

P-616 CP - 100 P-616

EQUIPMENT ITEM DESIGN DATA SHEET

ANSI

NO.	ITEM	VALUE SPECIFIED BY USER	VALUE USED BY SYSTEM	UNITS
	EQUIPMENT DESIGN DATA			
1.	MATERIAL SYMBOL		CS	
2.	DESIGN TEMPERATURE		120.0	DEG F
3.	DESIGN PRESSURE		150.0	PSIG
4.	HEAD	150.0	150.0	FEET
5.	ASA RATING		150	
6.	DRIVER POWER		40.00	HP
7.	DRIVER SPEED		1800.0	RPM
8.	DRIVER TYPE SYMBOL		MOTOR	
9.	PUMP EFFICIENCY		82.00	PERCENT
	SEAL DATA			
10.	SEAL TYPE		SNGL	
11.	PRIMARY SEAL PIPE PLAN		11	
12.	SEAL PIPING PIPE TYPE		WELD	
13.	SEAL PIPING MATERIAL		A 106	
	PROCESS DESIGN DATA			
14.	CAPACITY	803.0	803.0	GPM
15.	FLUID DENSITY		62.43	PCF
16.	FLUID VISCOSITY		1.000	CPOISE
17.	RESULTING DESIGN VALUE		0.0498	HP/GPM
18.	CAPACITY*HEAD		120450	GPM -FT
	WEIGHT DATA			
19.	PUMP		530	LBS
20.	MOTOR		450	LBS
21.	BASE PLATE		110	LBS
22.	FITTINGS, ETC.		100	LBS
23.	TOTAL WEIGHT		1200	LBS
	VENDOR COST DATA			
24.	MOTOR		1700	USD
25.	MATERIAL COMPONENT COST		2051	USD
26.	SHOP MANPOWER COST		2023	USD
27.	SHOP OVERHEAD		2064	USD
28.	GENERAL OFFICE OVERHEAD		1333	USD
29.	PROFIT		1429	USD
30.	TOTAL COST		10600	USD
31.	RESULTING UNIT COST		8.833	USD/LBS
32.	RESULTING UNIT COST		13.20	USD/GPM
33.	RESULTING UNIT COST		265.0	USD/HP

	MATERIAL USD	MANPOWER USD	MANPOWER MANHOURS	L/M RATIO USD/USD
EQUIPMENT&SETTING	10600.	856.	46	0.081
PIPING	12276.	4521.	244	0.368
CIVIL	328.	797.	51	2.427
STRUCTURAL STEEL	0.	0.	0	0.000
INSTRUMENTATION	5963.	1466.	76	0.246
ELECTRICAL	427.	697.	35	1.631
INSULATION	0.	0.	0	0.000
PAINT	472.	770.	56	1.632
SUBTOTAL	30066.	9107.	508	0.303

INSTALLED DIRECT COST 39200. INST'L COST/PE RATIO 3.698

IPE Version: 4.0
Estimate Base: 1st Quarter 1997 (4.0)
June 30, 1997
Run Date: 16NOV98-11:53:19

Equipment Num	:: P-630
Eqipment Name	:: Recycled Water Pump
Associated PFD	:: PFD-P100-A601
Equipment Type	:: CENTRIFUGAL
Equipment Category	:: PUMP
Equipment Description	:: 790 gpm, 150 ft head
Number Required	:: 1
Number Spares	:: 1
Scaling Stream	:: 602
Base Cost	:: 10600.00
Cost Basis	:: ICARUS
Cost Year	:: 1997
Base for Scaling	:: 179446.000
Base Type	:: FLOW
Base Units	:: KG/HR
Install. Factor	:: 2.8000
Install. Factor Basis	:: DELTA-T98
Scale Factor Exponent	:: 0.7900
Scale Factor Basis	:: GARRETT
Material of Const	:: CS
Utility Calc.	:: ASPEN FORT BLCK
Utility Stream	:: WP630
Utility Type	:: POWER
Date Modified	:: 12/22/98
Notes	:: Expected Power Req. 39 kW.

Eq. No.	P-630		
Eq. Name	Recycle Water Pump		
Associated PFD	A601		
Stream for Design	602		
Stream Description	Pump Inlet		
Flow Rate	179446	Kg/hr	R9809G
Average Density	1.00	g/cm^3	R9809G
Frac Solids	0.009		
Flowrate	790.7	gpm	
Outlet Head	150.0	ft	
Estimated Power	52	hp	
	39	kW	
Cost Estimation			
ICARUS- 1997	**$ 9,800**	CS	
	$ 10,600	CI	
	$ 14,300	SS	
Scaling Stream	602		
Scaling Rate	179446		
Scaling Units	Kg/hr		

P-630 CP - 100 P-630

EQUIPMENT ITEM DESIGN DATA SHEET

ANSI

NO.	ITEM	VALUE SPECIFIED BY USER	VALUE USED BY SYSTEM	UNITS
	EQUIPMENT DESIGN DATA			
1.	MATERIAL SYMBOL		CS	
2.	DESIGN TEMPERATURE		120.0	DEG F
3.	DESIGN PRESSURE		150.0	PSIG
4.	HEAD	150.0	150.0	FEET
5.	ASA RATING		150	
6.	DRIVER POWER		40.00	HP
7.	DRIVER SPEED		1800.0	RPM
8.	DRIVER TYPE SYMBOL		MOTOR	
9.	PUMP EFFICIENCY		82.00	PERCENT
	SEAL DATA			
10.	SEAL TYPE		SNGL	
11.	PRIMARY SEAL PIPE PLAN		11	
12.	SEAL PIPING PIPE TYPE		WELD	
13.	SEAL PIPING MATERIAL		A 106	
	PROCESS DESIGN DATA			
14.	CAPACITY	791.0	791.0	GPM
15.	FLUID DENSITY		62.43	PCF
16.	FLUID VISCOSITY		1.000	CPOISE
17.	RESULTING DESIGN VALUE		0.0506	HP/GPM
18.	CAPACITY*HEAD		118650	GPM -FT
	WEIGHT DATA			
19.	PUMP		530	LBS
20.	MOTOR		450	LBS
21.	BASE PLATE		110	LBS
22.	FITTINGS, ETC.		100	LBS
23.	TOTAL WEIGHT		1200	LBS
	VENDOR COST DATA			
24.	MOTOR		1700	USD
25.	MATERIAL COMPONENT COST		2050	USD
26.	SHOP MANPOWER COST		2012	USD
27.	SHOP OVERHEAD		2052	USD
28.	GENERAL OFFICE OVERHEAD		1329	USD
29.	PROFIT		1457	USD
30.	TOTAL COST		10600	USD
31.	RESULTING UNIT COST		8.833	USD/LBS
32.	RESULTING UNIT COST		13.40	USD/GPM
33.	RESULTING UNIT COST		265.0	USD/HP

	MATERIAL USD	MANPOWER USD	MANPOWER MANHOURS	L/M RATIO USD/USD
EQUIPMENT&SETTING	10600.	856.	46	0.081
PIPING	12276.	4521.	244	0.368
CIVIL	328.	797.	51	2.427
STRUCTURAL STEEL	0.	0.	0	0.000
INSTRUMENTATION	5963.	1466.	76	0.246
ELECTRICAL	427.	697.	35	1.631
INSULATION	0.	0.	0	0.000
PAINT	472.	770.	56	1.632
SUBTOTAL	30066.	9107.	508	0.303

INSTALLED DIRECT COST 39200. INST'L COST/PE RATIO 3.698

IPE Version: 4.0
Estimate Base: 1st Quarter 1997 (4.0)
June 30, 1997
Run Date: 16NOV98-11:53:19

```
Equipment Num        :: S-600
Eqipment Name        :: Bar Screen
Associated PFD       :: PFD-P100-A602
Equipment Type       :: SCREEN
Equipment Category   :: SEPARATOR
Equipment Description:: 0.5" Mech. cleaned Screen
Number Required      :: 1
Number Spares        :: 0
Scaling Stream       :: 612
Base Cost            :: 117818.00
Cost Basis           :: CH2MHL91
Cost Year            :: 1991
Base for Scaling     :: 188129.000
Base Type            :: FLOW
Base Units           :: KG/HR
Install. Factor      :: 1.2000
Install. Factor Basis:: DELTA-T98
Scale Factor Exponent:: 0.3000
Scale Factor Basis   :: ASSUMED
Material of Const    :: CS
Utility Calc.        :: ASPEN FORT BLCK
Utility Stream       :: WS600
Utility Type         :: POWER
Date Modified        :: 01/13/99
Notes                :: Expected Power Req: .7 kW
```

Eq. No.	S-600		
Eq. Name	Bar Screen		
Associated PFD	A602		
Stream for Design	612		
Stream Description	Eq. Inlet		
Flow Rate (total)	188129	Kg/hr	R9809G
Average Density	0.945		
Liquid Flowrate	876	gpm	
Average Flow	73	gpm	Ch2MHill Report 1991
Cost	$ 55,900		1991
Power Requirement	1	hp	Estimated for Mechanical Cleaners
	0.7	kW	
Cost Estimation			
Scaling Exponent	0.3		Assumed Very Low
Scaled Cost	**$ 117,818**		
Year	1991		
Scaling Stream	612		
Scaling Rate	188129		
Scaling Units	Kg/hr		

Full Fuel Cycle Analysis of Biomass to Ethanol: Wastewater Treatment System Performance

By
CH2M HILL

December 10, 1991

Submitted to
National Renewable Energy Laboratory

CH2M HILL Protected Information

DEN/197R/012.51/1

DESIGN SUMMARY

CASE 3
SOUTHEAST, 2010

Bar Screens

S-600

Number: Two
Type: Mechanically Cleaned
Bar Spacing: 1/2 inch

Equalization Tank

Number: One
Type: Above grade, welded steel
Volume: 225,000 gal
Size: 45 ft diam, 20 ft SWD
Hydraulic Retention Time: 24 hours
Mixers: 3, side entry, 4 hp (based on 30 hp/mg)

Primary Heat Exchanger Influent Pump

Number: Two (one redundant)
Type: Centrifugal, variable speed drive
Capacity: 400 gpm at 15 ft total head

Primary Heat Exchanger

Number: One
Type: Shell and tube type, process water in tube
Surface Area: 131 sq ft
Temperature Reduction: 142 degrees F to 131 degrees F
Cooling Water Required: 46.5 gpm

Nutrient Feed System

Number: One
Type: Dry or liquid
Capacity: 7,500 lb/d urea and 3,000 lb triple super phosphate

Anaerobic Reactor

Number: Five
Type: Above grade, welded steel with cover

CASE 3: SOUTHEAST, 2010

		WATER	SOLUBLE SOLIDS	ASH	LIGNIN	CRUDE PROTEIN	XYLOSE	HMF	FURFURAL	GYPSUM (SOL)	GYPSUM (INSOL)	CELLULAS	GLYCEROL	CELL MASS	TOTAL	FLOW gpm
STRM.NO.1	LB/HR	36507	759	191	38	162	139	25	0	81	7	15	847	5	38776	73
PROCESS WATER TO	TSS,mg/l				1043						192				1235	
WASTE TREATMENT	COD,mg/l		51443			7557	4081	1146	0			700	28355	195	93477	
	BOD,mg/l		23326			1778		528	0			165			25797	
	SO4,mg/l									1245	108				1352	
	TDS,mg/l			5241						2223					7464	
STRM.NO.2	LB/HR	43054	0	0	0	0	0	0	3627	0	0	0	0	0	46681	86
OFFGAS FROM	TSS,mg/l				0						0				0	
BLOWDOWN TANK	COD,mg/l		0			0	0	0	140934			0	0	0	140934	
	BOD,mg/l		0			0		0	64981			0			64981	
	SO4,mg/l									0	0				0	
	TDS,mg/l			0						0					0	
STRM.NO.3	LB/HR	320	0	0	0	0	0	0	0	0	0	0	0	0	320	1
WASTE WATER	TSS,mg/l				0						0				0	
FROM CIP/CS	COD,mg/l		0			0	0	0	0			0	0	0	0	
	BOD,mg/l		0			0		0	0			0			0	
	SO4,mg/l									0	0				0	
	TDS,mg/l			0						0					0	
STRM.NO.4	LB/HR	79981	759	181	38	162	139	25	3627	81	7	15	847	5	85867	160
STREAM TO	TSS,mg/l				476						88				564	
ANAEROBIC DIGESTION	COD,mg/l		23481			3449	1863	523	75865			319	12943	89	118532	
	BOD,mg/l		10647			812		241	34980			75			46755	
	SO4,mg/l									568	49				617	
	TDS,mg/l			2267						1015					3282	

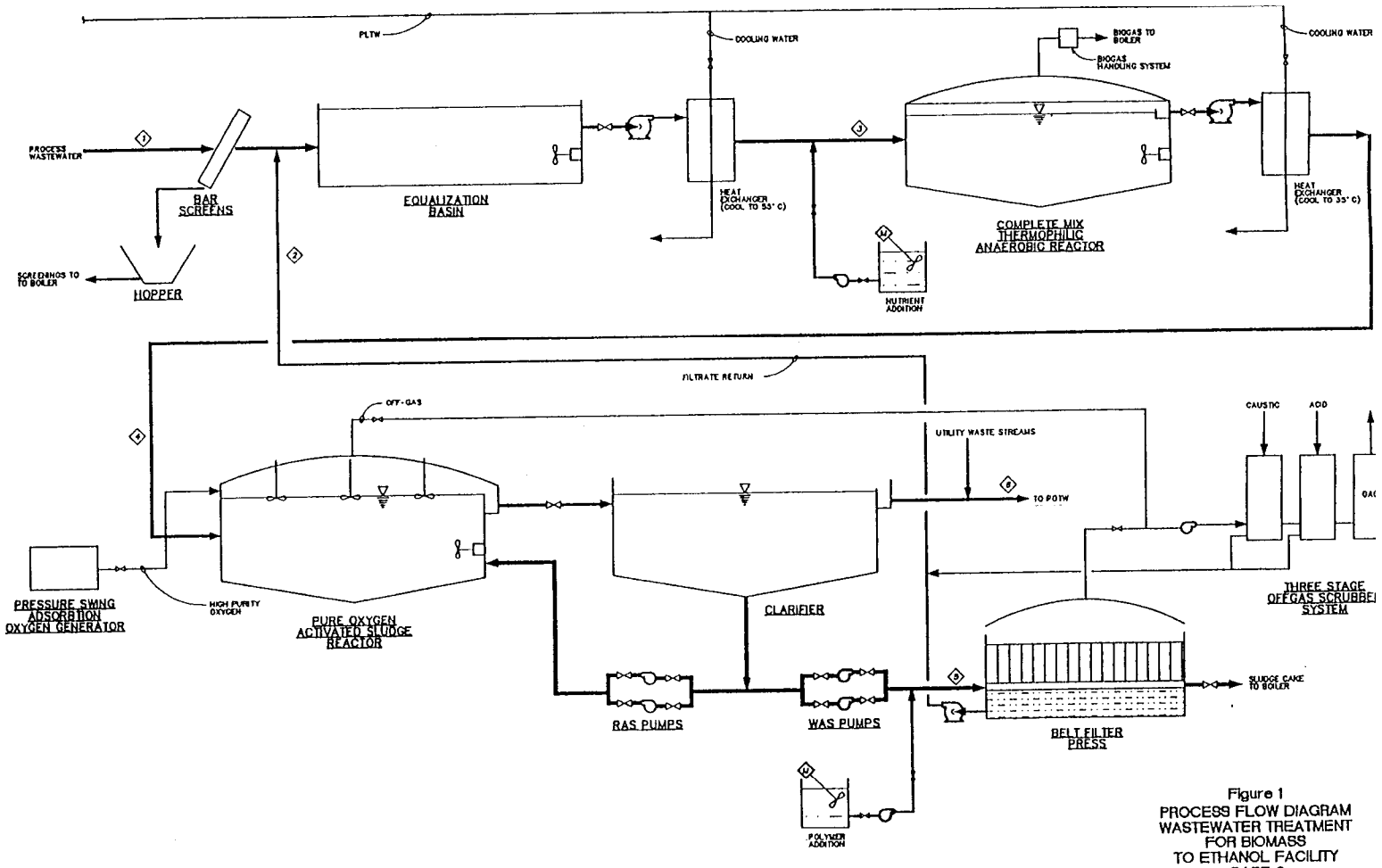

Figure 1
PROCESS FLOW DIAGRAM
WASTEWATER TREATMENT
FOR BIOMASS
TO ETHANOL FACILITY
CASE 6

12/09/91

FILE: SERI

CH2M HILL
WASTEWATER TREATMENT FOR ETHANOL FACILITY
PROJECT NO: DEN02922.A0
PREPARED BY: E.R.MEYER

WASTEWATER TREATMENT FOR ETHANOL FACILITY

DESCRIPTION	QUANT	UNIT	$/UNIT	TOTAL COST	REFERENCE
CASE 3					
GENERAL REQUIREMENTS:					
General Requirements	6.00%		$15,315,287	$918,915	
SITEWORK:					
Clear & Grub	9	ACRES	$2,000.00	$18,000	
Effluent Storage Lagoon (18 Acres):					
Embankment	66,987	CY	$10.00	$669,867	91 MEANS 022-262-0100
HPDE Liner (20 mil)	104,564	SY	$2.50	$261,411	
CLARIFIER STRUCTURE (20'D, 15' SWD):					
Earthwork:					
Excavation	1,068	CY	$3.00	$3,203	
Structural Backfill	23	CY	$10.00	$233	
Backfill	807	CY	$2.00	$1,613	
Concrete:					
12" Slab on Grade	23	CY	$200.00	$4,652	
12" Walls	79	CY	$400.00	$31,633	
Metals:	1	LS	$5,000.00	$5,000	
AERATION TANKS (40'X150'X17'H, ABOVE GRADE):	4	EA			
Concrete:					
12" Slab on Grade	889	CY	$200.00	$177,778	
12" Walls	951	CY	$400.00	$380,593	
Metals:	1	LS	$5,000.00	$5,000	
BUILDINGS:					
Office/Lab	2,100	SF	$100.00	$210,000	
Preliminary Treatment Building	900	SF	$75.00	$67,500	
Pump Building	1,200	SF	$75.00	$90,000	
Belt Filter Press Building	2,000	SF	$75.00	$150,000	
EQUIPMENT			55,900		S-600
Bar Screens	1	EA	$55,900.00	$55,900	
Equalization Tank (Steel,45'D, 20' SWD, 225,000 gal)	1	EA	$126,000.00	$126,000	91 MEANS 132-051-1000 x 1.2
Equalization Tank Mixers (3.2 HP)	3	EA	$9,360.00	$28,080	
Primary Heat Exchanger Influent Pump (400 gpm)	2	EA	$5,590.00	$11,180	

Equipment Num	:: S-601
Eqipment Name	:: Beer Column Bottoms Centrifuge
Associated PFD	:: PFD-P100-A601
Equipment Type	:: CENTRIFUGE
Equipment Category	:: S/L SEPARATOR
Equipment Description	:: 36" X 12", 550 HP EACH
Number Required	:: 3
Number Spares	:: 0
Scaling Stream	:: CENTFLOW
Base Cost	:: 659550.00
Cost Basis	:: VENDOR
Cost Year	:: 1998
Base for Scaling	:: 404.000
Base Type	:: FLOW
Base Units	:: GPM
Install. Factor	:: 1.2000
Install. Factor Basis	:: DELTA-T98
Scale Factor Exponent	:: 0.6000
Scale Factor Basis	:: GARRETT
Material of Const	:: 316SS
Utility Calc.	:: ASPEN FORT BLCK
Utility Stream	:: WS601
Utility Type	:: POWER
Date Modified	:: 01/13/99
Notes	:: Expected total Power Req: 993 kW. Number of units and capacity of each unit determined by Aspen.

Eq. No.	S-601		
Eq. Name	Beer Columns Bottoms Centrifuge		
Associated PFD	A601		
Stream for Design	525		
Stream Description	Centrifuge Inlet		
Flow Rate (total)	278645	Kg/hr	R9809G
Flow Rate (solids)	31766	Kg/hr	R9809G
Average Density	1.013		
Frac Solids	0.11		
Slurry Flowrate	1211	gpm	
Solids Flowrate	34.9	ton/hr	
Dorr Oliver	**$ 750,000**		
	500	**gpm**	**capacity**
Bird	$ 750,000		
	400	gpm	largest Unit
Power Requirement	550	hp	per 500 gpm, per Merrick attached
Total Power Requirement	1332	hp	
	993	kW	
Use Dorr Oliver			
Number of Units	**3**		
Capacity of Each Unit	404	gpm	
	92882	Kg/hr	
Scaling Factor	**0.60**		
Scaled Cost (Dorr Oliver)	**$ 659,550**		
Scaling Stream	CENTFLOW		
Scaling Rate	404		
Scaling Units	GPM		
Integer Number	**NUMRCENT**		Calculated by ASPEN, max 500 gpm

MERRICK®
Engineers & Architects
Mail :P.O. Box 22026/ Denver, CO / 80222 / USA
Delivery: 2450 S. Peoria St. / Aurora, CO / 80014
Phone: 303-751-0741 / Fax: 303-751-2581

FAX

Date: 11/17/98 8:04 AM

To: Bob Wooley
Company:
Fax Number: 303-384-6877
Voice Number:

From: Dick Voiles
Project Number:
Voice Number: 303-751-0741
Number of Sheets:
(including this sheet)

I'm sorry the attached was not in the estimate backup volume. We are putting it in now.

We used the Dorr-Oliver quote for the Beer Col. Btms. Centrifuge. We feel that Bird Machine and Dorr-Oliver are very well established names in centrifugation and that their prices essentially checked each other. Dorr-Oliver had a slightly larger machine - making it a better fit and cheaper.

For the belt filter press (M-614) we used Joe Ruocco's estimate. However we did solicit a price from Compositech to verify Joe. The Compositech stuff is attached.

cc: Jim Kassian
Jim Sharpe
Fran Ferraro

MERRICK ARCHITECTS & ENGINEERS

Merrick & Company
Mail :P.O. Box 22026/ Denver. CO / 80222 / USA
Delivery: 2450 S. Peoria St. / Aurora, CO / 80014
Phone: 303-751-0741 / Fax: 303-751-2581

RECORD OF TELEPHONE CONVERSATION

DATE:	8/21/98	PROJ. NO.: 19013104
FROM:	Ed Sweeny	COMPANY: Dorr-Oliver
LOCATION:		PHONE NO.: 203-838-6120
TO:	Ron Gould	COMPANY: Merrick
LOCATION:		PHONE NO.:

SUBJECT: Beer Column Bottoms Centrifuge

Required ID	36"
Length	12' (4:1)
BHP	400 bowl
	150 scroll
	550 total

316 SS construction

Will need 3 each of 500 gpm model decanters to handle the approximate 1400 gpm total flow.

Cost is $750,000 per machine.

Baker Process

Contact Information

BAKER HUGHES Baker Pr

- Bird Machine Co. Home Page
- Products
- Support Services
- Contact Information

Please contact a Bird Machine Company, a Representative or Service Center nearest you or at the headquarters address listed below if you need additional assistance.

BIRD Machine Company, Inc.
100 Neponset Street
South Walpole, MA 02071-9103
Telephone: 508-668-0400 FAX: 508-668-6855

BAKER HUGHES **Baker Process**

Last modified on:
13 Aug 1998
by Senlin Zhang,
senlin.zhang@bakerhughes.com

Microsoft Internet Explorer
Best expe

FONECON with John Prysi in Torence, CA, at (310) 373-7622, and Ron Gould on 08-25-98:

(1) He is quite familiar with NREL's project. He did some of the equipment work for Amoco's / Stone & Webster's SWAN project, which may have generated process & test data used in this project. He also knows Fran Ferraro.

(2) Their largest centrifuge is a Model #6400:

Capacity = 400 gal/min.
Bowl Diameter = 44"
Bowl Length = 132"
Motor = 300 HP
Mat'l = 316 SS
Centrifugal Force = 1000 G's
Cost = $750,000/each

(3) For 1400 gpm, we will need 4 units; cost = 4 ($750K) = $3,00

(4) If more than 1000 G's are needed (say 2000 G's), then we will have to go to more numbers of smaller units to handle it. This will increase costs, as expected.

5) I also asked about pressure leaving the centrifuge. He said that the liquid stream exits through a series of bottles and gravity feeds into a tank (essentially at atm.). We then would pump liquids out of the tank.

MERRICK ARCHITECTS & ENGINEERS

Merrick & Company
Mail :P.O. Box 22026/ Denver, CO / 80222 / USA
Delivery: 2450 S. Peoria St. / Aurora, CO / 80014
Phone: 303-751-0741 / Fax: 303-751-2581

RECORD OF TELEPHONE CONVERSATION

DATE:	09/10/98	PROJ. NO.:	19013104
FROM:	Roger Schultz	COMPANY:	Ro-Caam
LOCATION:	Denver, CO	PHONE NO.:	(303)470-0770
TO:	Ron Gould	COMPANY:	Merrick Company
LOCATION:	Aurora, CO	PHONE NO.:	(303)751-0741

SUBJECT: NREL Softwood Project - Centrifuge Price Estimate

Roger called to provide pricing information for the beer column bottoms centrifuge for this project (S-601A/B). Based on solids and liquid rates of 40 ton/hr and 1,400 gpm, respectively, he offered the following:

OPTION 1: A single centrifuge, Model #906, good for 1,200 gpm and at a cost of $1,200,000.

OPTION 2: Two (2) centrifuges, Model # 706, each good for 500 to 600 gpm and at a unit cost of $650,000 ($1,300,000 total for two units).

cc: Dick Voiles

Equipment Num	:: S-614
Eqipment Name	:: Belt Filter Press
Associated PFD	:: PFD-P100-A603
Equipment Type	:: FILTER-PRESS
Equipment Category	:: S/L SEPARATOR
Equipment Description	:: BELT THICKNESS
Number Required	:: 1
Number Spares	:: 0
Scaling Stream	:: AEROBCOO
Base Cost	:: 650223.00
Cost Basis	:: VENDOR
Cost Year	:: 1998
Base for Scaling	:: 438.000
Base Type	:: FLOW
Base Units	:: KG/HR
Install. Factor	:: 1.8000
Install. Factor Basis	:: VENDOR
Scale Factor Exponent	:: 0.7200
Scale Factor Basis	:: VENDOR
Utility Calc.	:: ASPEN FORT BLCK
Utility Stream	:: WM614
Utility Type	:: POWER
Date Modified	:: 01/13/99
Notes	:: Expected Power Req. 22 kW.

Eq. No.	S-614		
Eq. Name	Aerobic Sludge Belt Filter Press		
Associated PFD	A603		
Stream for Design	618		
Stream Description	Reactor Inlet		
Flow Rate	185782	Kg/hr	R9809G
Liquid Density	0.984	g/cc	R9809G
Frac Solids	0		R9809G
Flowrate	831.1	gpm	
Flowrate	1,196,734	gal/day	
Flowrate	188755	L/hr	
COD Concentration	**2323**	**mg/L**	
COD Loading	438	Kg/hr	R9809G (See Conversion below)
COD Concentration	334	mg/L	Phoenix Bio-Systems, Inc. Merrick Appendix F "Case 1",
Flow	766	gpm	
COD Loading	58	Kg/hr	

Cost Estimation	Purchase	Installation	Phoenix Bio-Systems, Inc. Merrick Appendix F "Case 1",
Unit	**$ 110,000**	$ 42,000.00	
Piping	**$ 42,000**	$ 67,000.00	
Totals	**$ 152,000**	$ 109,000.00	

Prorated Additional Piping

Total Cost of Option	$3,737,350	Phoenix Bio-Systems, Inc. Merrick Appendix F "Case 1",
Overhead Portion	$725,000	Design Engineering Fee + Site Preparation
Project Cost Less Overhead	$3,012,350	
Overall Piping & Installation	$371,600	Controls+Temp Control+Piping
Overall Piping & Inst %	12.34%	
Installation Cost Above	$109,000	Per above, extra piping and inst. Prorated
Additional Prorated Installati	$32,197	
Total Installation Cost	**$141,197**	
Installation Factor	**1.93**	

COD Concentration	520	mg/L	Phoenix Bio-Systems, Inc. Merrick Appendix F "Case 2",
Flow	1105	gpm	
COD Loading	131	Kg/hr	

Cost Estimation	Purchase	Installation	
Unit	**$ 210,000**	$ 65,000.00	Phoenix Bio-Systems, Inc. Merrick Appendix F "Case 2",
	$ 62,000	$ 78,000.00	
Totals	**$ 272,000**	$ 143,000.00	

Prorated Additional Piping

Total Cost of Option	$6,013,805	Phoenix Bio-Systems, Inc. Merrick Appendix F "Case 2",
Overhead Portion	$1,165,000	Design Engineering Fee + Site Preparation
Project Cost Less Overhead	$4,848,805	
Overall Piping & Installation	$518,100	Controls+Temp Control+Piping
Overall Piping & Inst %	10.69%	
Installation Cost Above	$143,000	Per above, extra piping and inst. Prorated
Additional Prorated Installati	$44,343	
Total Installation Cost	**$187,343**	
Installation Factor	**1.69**	

Calculated Scaling Factor	0.72	Scaled on COD (related to sludge flow)
Average Installation Fact.	1.8	
Scaled Cost	**$ 650,223**	Scaled on COD
Power Requirement	30 hp	See Compositech Quote Attached
	22.4 kW	
Scaling Stream	**AEROBCOD**	ASPEN Calculated Anerobic Inlet COD
Scaling Rate	**438**	
Scaling Units	**Kg/hr**	

	Kg/hr	COD Kg/hr	Per R9809G
Mass Flow KG/HR			
Glucose	0.00	0	
Xylose	0.00	1.55434E-08	
Unknown	0.00	0	
Colslds	0.00	0	
Ethanol	3.25	6.78210016	
Arabinose	0.00	0	
Galactose	0.00	0	
Mannose	0.00	0	
Glucose Oligomers	0.00	0	
Cellibiose	0.00	0	
Xylose Oligomers	0.00	0	
Mannose Oligomers	0.00	0	
Galactose Oligomers	0.00	0	
Arabinose Oligomers	0.00	0	
Xylitol	0.00	0	
Furfural	54.04	90.2384834	
HMF	18.21	27.6783336	
Methane	2.49	9.95074	
Lactic Acid	0.05	0.056598506	
Acetic Acid	21.11	22.5878391	
Glycerol	0.00	0.000692483	
Succinic Acid	0.00	5.35041E-05	
Denaturant	0.00	0	
Oil	0.00	6.91765E-06	
Acetate Oligomers	0.00	0	
NH4Acet	245.95	281.1238218	
	345.093	438.4186695	Kg/hr of COD

	Kg COD/Kg	
Glucose	1.07	Per Merrick WWT Report 11/98
Xylose	1.07	
Unknown	1.07	
Colslds	0.71	
Ethanol	2.09	
Arabinose	1.07	
Galactose	1.07	
Mannose	1.07	
Glucose Oligomers	1.07	
Cellibiose	1.07	
Xylose Oligomers	1.07	
Mannose Oligomers	1.07	
Gaactose Oligomers	1.07	
Arabinose Oligomers	1.07	
Xylitol	1.22	
Furfural	1.67	
HMF	1.52	
Methane	4	
Lactic Acid	1.07	

Acetic Acid	1.07
Glycerol	1.22
Succinic Acid	0.95
Denaturant	3.52
Oil	2.89
Acetate Oligomers	1.07
NH4Acet	1.143

CLIENT:	**NREL**
PHONE/FAX:	
PROJECT NUMBER:	
DATE:	5/18/98
TYPE:	Anaerobic/Aerobic
LOAD RATE:	12 g/l/d & 0.55 g/l/d
COD:	4,173 mg/l and 334 mg/l
FLOW:	766 gpm

ITEM	Description	Qty	Unit Cost	Installation	Q x UC + I	Totals
Treatability						
Laboratory Analysis						
Preliminary Design						
						$0 00
Equalization						
Dimensions	36'd x 44'h AOS Sl St					
Capacity (gal)	330000 gal	1	325,000.00	86,000.00	411,000.00	
						$411,000.00
Main Reactor						
Dimensions	24'd x 60'h AOS	2				
Capacity (gal)	385,000 gal	1	350,000.00	95,000.00	445,000.00	
Distribution Manifold	ICM s/s	8	4,950.00	10,500.00	50,100.00	
Overflow collection system	PVC	2	3,500.00	7,500.00	14,500.00	
Separator	10 x 12 Custom	2	24,500.00	17,500.00	66,500.00	
Sample Cocks	1" PVC	24	50.00	1,200.00	2,400.00	
Packing	TriPack PP	2600	12.00	2,500.00	33,700.00	
Insulation	9000 ft2	9050	7.00		63,350.00	
						$675,550.00
Decarbonator						
Capacity	3,000 gal	1	14,500.00	17,500.00	32,000.00	
Dimensions	6'd x 18'h				0.00	
Distributor	s/s	1	4,850.00	8,700.00	13,550.00	
Packing	TriPack 3.5 PP	400	12.00	1,500.00	6,300.00	
Demister		1	1,500.00	1,000.00	2,500.00	
Gratings	FRP	1	3,500.00	3,000.00	6,500.00	
Fan	3 hp	1	1,250.00	2,200.00	3,450.00	
Drain						
						$64,300.00

Controls						
Field Instruments		1	85,000.00	8,500.00	93,500.00	
Pressure Ind		12	250.00	750.00	3,750.00	
Temp Indicators		12	250.00	750.00	3,750.00	
pH Controller		4	2,500.00	2,000.00	12,000.00	
Biogas Meter		1	4,300.00	1,250.00	5,550.00	
Panel		1	3,800.00	2,250.00	6,050.00	
PLC		1	9,500.00	5,500.00	15,000.00	
Control computer		1	10,500.00	7,500.00	18,000.00	
Software		1	4,000.00	12,000.00	16,000.00	
						$173,600.00
Temp Control						
Hot water heater		0	0.00	0.00	0.00	
Heat Exch		2	6,500.00	14,500.00	27,500.00	
						$27,500.00
BioGas Scrubber						
Capacity	300 cf	1	6,500.00	7,600.00	14,100.00	
Grating	FRP	1	1,800.00	3,350.00	5,150.00	
Media	280	280	7.50	1,550.00	3,650.00	
						$22,900.00
Piping						
PVC		1	75,000.00	55,000.00	130,000.00	
Heat trace/Insulate		1	12,500.00	28,000.00	40,500.00	
						$170,500.00
Macronutrient Tank						
Tank	5000	1	8,500.00	3,500.00	12,000.00	
Nutrient Feed Pump		1	1,500.00	3,800.00	5,300.00	
Micronutrient Tank						
Tank	3000	1	4,500.00	3,500.00	8,000.00	
Nutrient pump		1	1,500.00	3,800.00	5,300.00	
Caustic Tank						
Caustic Dosing Pump	500 gpd	1	1,150.00	3,700.00	4,850.00	
Tank	5500 gal	1	9,500.00	17,500.00	27,000.00	
Iron Tank	200 gal	1	550.00	500.00	1,050.00	
Metering pump		1	850.00	1,550.00	2,400.00	
Phosphate Tank	1000 gal	1	2,500.00	2,500.00	5,000.00	
Metering pump	50 gpd	1	850.00	1,550.00	2,400.00	
			$31,400	41900		$73,300.00

-604 PM 1.04

Flare						
Burner	150 CFM	1	8,500.00	4,000.00	12,500.00	
Auto pilot,N-gas,air		1	4,500.00	3,500.00	8,000.00	
						$20,500.00
System Feed Pump						
Cent	766 gpm, 40' TDH s/s	2	4,900.00	2,700.00	12,500.00	
System Recirc Pump						
Cent	1500 gpm 70' TDH s/s	2	8,000.00	4,500.00	20,500.00	
						$20,500.00
Aerobic Secondary						
Feed Pump	766 gpm 40' TDH s/s	2	4,900.00	3,500.00	13,300.00	
Aerated Lagoon	0.9 mgal	1		500,000.00	500,000.00	
Floating aerators	4x25 hp, 2 x 50 hp	6	25,000.00	22,000.00	172,000.00	
						$685,300.00
Clarifier	180,000 gal	1	155,000.00	115,000.00	270,000.00	
Sludge pumps	2x25hp PD s/s	2	5,500.00	2,900.00	13,900.00	
Effluent pumps/wet wells	2x25hp cent	2	3,500.00	10,500.00	17,500.00	
						$301,400.00
Belt Thickener 5 6/14		1	110,000.00	42,000.00	152,000.00	
,14 Piping	Yard	1	42,000.00	67,000.00	109,000.00	
Sludge holding Tanks/Load out		1	~~45,000.00~~	~~25,000.00~~	~~70,000.00~~	
			152,000	109,000		~~$331,000.00~~
				27927		
Sand Filters						
VortiSand Filters	0	0	0.00	0.00 136,927	0.00	
Surge Tanks	0	0	0.00	0.00	0.00	
						$0.00
Chlorinator						
Hypo Storage/feed Tk	0	0	0.00	0.00	0.00	
Metering system		0	0.00	0.00	0.00	
Contact Tank	0	0	0.00	0.00	0.00	
C.T. Aerator	0	0	0.00	0.00	0.00	
						$0.00

Design Engineering Fee	all	1	250,000.00	250,000.00	
Design Drawings					
Shop Drawings					
Wiring Diagrams					
Power Requirements					
Operating Manuals					
Administratative					
					$250,000.00
Site Installation		1		295,000.00	
Site Preparation					
Off-Loading					
Pads					
Power Hook-Up					
Process Hook-Up					
Weather Protection					
Power Outage Protection					
Buildings	Control Building	1		125,000.00	
Fencing					
MCC				55,000.00	
Site Electrical					
Subcontractors					
					$475,000.00
Permits and Fees				35,000.00	
Taxes					
Insurance					
					$35,000.00
TOTAL					**$3,737,350.00**
Plus 12 % Contingency					$4,185,832.00

Case 2- Capital Cost - Combined Anaerobic and A[illegible]bic Treatment - NREL- Counter Current / Biotic Acid

CLIENT:	**NREL**	
PHONE/FAX:		
PROJECT NUMBER:		
DATE:		5/18/98
TYPE:	Anaerobic/Aerobic	
LOAD RATE:	12 g/l/d & 0.55 g/l/d	
COD:	6510 mg/l & 520 mg/l	
FLOW:	1105 gpm	

ITEM	Description	Qty	Unit Cost	Installation	Q x UC + I	Totals
Treatability						
Laboratory Analysis						
Preliminary Design						
						$0.00
Equalization						
Dimensions						
Capacity (gal)	500,000	1	450,000.00	100,000.00	550,000.00	
						$550,000.00
Main Reactor						
Dimensions	26' d x 60'hAOS aqua St	4				
Capacity (gal)	950,000	1	750,000.00	175,000.00	925,000.00	
Distribution Manifold T606	ICM s/s	16	4,950.00	32,500.00	111,700.00	
Overflow collection system	PVC	4	15,500.00	22,000.00	84,000.00	
Separator	10 x 12 FRP Custom	4	28,000.00	38,700.00	150,700.00	
Sample Cocks	1" PVC	36	50.00	1,200.00	3,000.00	
Packing	TriPack PP	6370	12.00	2,500.00	78,940.00	
Insulation		19600	7.00		137,200.00	
			1,218,640	271,900 & 159,265 pipe inst 431,165		$1,490,540.00
Decarbonator						1649305 1,35,NST
Capacity	5,000 gal	1	22,500.00	27,500.00	50,000.00	
Dimensions	8'd x 18				0.00	
Distributor	s/s	1	7,590.00	9,800.00	17,390.00	
Packing	TriPack 3.5 PP	700	12.00	1,500.00	9,900.00	
Demister		1	2,500.00	1,000.00	3,500.00	
Gratings	FRP	1	4,500.00	3,000.00	7,500.00	
Fan	4 hp	1	1,250.00	2,200.00	3,450.00	
Drain						
			46,740	45,000		$91,740.00

Controls						
Field Instruments		1	85,000.00	8,500.00	93,500.00	
Pressure Ind		18	250.00	750.00	5,250.00	
Temp Indicators		18	250.00	750.00	5,250.00	
pH Controller		6	2,500.00	2,000.00	17,000.00	
Biogas Meter		1	4,300.00	1,250.00	5,550.00	
Panel		1	3,800.00	2,250.00	6,050.00	
PLC		1	9,500.00	5,500.00	15,000.00	
Control computer		1	10,500.00	7,500.00	18,000.00	
Software		1	4,000.00	12,000.00	16,000.00	
						$181,600.00 *
Temp Control						
Hot water heater		0	0.00	0.00	0.00	
Heat Exch		2	12,500.00	12,500.00	37,500.00	
						$37,500.00 *
BioGas Scrubber						
Capacity	800 cf	1	10,800.00	7,800.00	18,600.00	
Grating	FRP	1	2,200.00	4,550.00	6,750.00	
Media	650 CF	750	7.50	1,550.00	7,175.00	
						$32,525.00
Piping						
PVC		1	125,000.00	97,000.00	222,000.00	
Heat trace/Insulate		1	32,000.00	45,000.00	77,000.00	
						$299,000.00 *
Macronutrient Tank						
Tank	5000	1	8,500.00	3,500.00	12,000.00	
Nutrient Feed Pump		1	1,500.00	3,800.00	5,300.00	
Micronutrient Tank						
Tank	3000	1	4,500.00	3,500.00	8,000.00	
Nutrient pump		1	1,500.00	3,800.00	5,300.00	
Caustic Tank						
Caustic Dosing Pump	500 gpd	1	1,150.00	3,700.00	4,850.00	
Tank	5500 gal	1	9,500.00	17,500.00	27,000.00	
Iron Tank	200 gal	1	550.00	500.00	1,050.00	
Metering pump		1	850.00	1,550.00	2,400.00	
Phosphate Tank	1000 gal	1	2,500.00	2,500.00	5,000.00	
Metering pump	50 gpd	1	850.00	1,550.00	2,400.00	
						$73,300.00
			31400	41900		81143
				10% + 7843		
				49743		

INST FACT. 2.58

Flare						
Burner	600 CFM	1	10,500.00	4,000.00	14,500.00	
Auto pilot,N-gas,air		1	6,500.00	3,500.00	10,000.00	
						$24,500.00
System Feed Pump						
Cent	1200 gpm, 40' TDH s/s	2	6,500.00	4,600.00	17,600.00	
System Recirc Pump						
Cent	3000 gpm 70' TDH s/s	2	9,500.00	7,500.00	26,500.00	
						$24,500.00
Aerobic Secondary						
Feed Pump	1100 gpm 40' TDH s/s	2	6,500.00	4,200.00	17,200.00	
T-608 Aerated Lagoon T 608	2.5 MM gal	1	100,000.00	750,000.00	850,000.00	
Floating aerators	8 x 50 hp	8	35,000.00	30,000.00	310,000.00	
						$1,177,200.00
Clarifier	275,000 gal	1	225,000.00	125,000.00	350,000.00	
Sludge pumps	2x25hp PD s/s	2	5,500.00	2,900.00	13,900.00	
Effluent pumps/wet wells	2x25hp cent	2	3,500.00	10,500.00	17,500.00	
						$381,400.00
Belt Thickener S 614		1	210,000.00	65,000.00	275,000.00	
614 Piping	Yard	1	62,000.00	78,000.00	140,000.00	
Sludge holding Tanks/Load out		1	~~45,000.00~~	~~25,000.00~~	70,000.00	
			272,000	143000 44405 187405		~~$485,000.00~~
Sand Filters						
VortiSand Filters	0	0	0.00	0.00	0.00	
Surge Tanks	0	0	0.00	0.00	0.00	
						$0.00
Chlorinator						
Hypo Storage/feed Tk	0	0	0.00	0.00	0.00	
Metering system		0	0.00	0.00	0.00	
Contact Tank	0	0	0.00	0.00	0.00	
C.T. Aerator	0	0	0.00	0.00	0.00	
						$0.00

Design Engineering Fee	all	1	475,000.00	475,000.00	
Design Drawings					
Shop Drawings					
Wiring Diagrams					
Power Requirements					
Operating Manuals					
Administratative					$475,000.00
Site Installation		1		475,000.00	
Site Preparation					
Off-Loading					
Pads					
Power Hook-Up					
Process Hook-Up					
Weather Protection					
Power Outage Protection					
Buildings	Control Building	1		125,000.00	
Fencing					
MCC				55,000.00	
Site Electrical					
Subcontractors					$655,000.00
Permits and Fees				35,000.00	
Taxes					
Insurance					$35,000.00
TOTAL					**$6,013,805.00**
Plus 12 % Contingency					**$6,735,461.60**

TOTAL 6,013,805
Less OVHD 4,848,805
PIP & INST 518,100
% OF TOTAL 10.7%

COMPOSITECH

P.O.BOX 2673
2404 S. GRAND BLVD. (SUITE 215)
PEARLAND, TEXAS 77581

PHONE: (281) 485-5033
FAX: (281) 485-4594

DATE: August 27, 1998

FROM: JERRY D. PHILEN

ATTN: Andy Siegfried
Merrick

PHONE: 303-751-0741
FAX: 303-368-1299

fax pages (total) 12

I apologize for not being able to spend more time on this for you. This should be helpful, I hope.

If you have any questions, I will be in the office most of the day on Friday !!

Best Regards,

Jerry Philen

M-614

CAPACITY

COMPOSITECH
P.O Box 2673
Pearland , Texas 77581
281-485-5033 / Fax 281-485-4594

Aug. 27,1998
Proposal 98-0826
1

Prepared for

Merrick Engineers & Architects
2450 S.Peoria Street
Aurora, Colorado 80222

Attn: Andy Siegfried

SUBJECT

Project Number : 19013104

Preliminary Budgetary Pricing
for
2.0m Belt Filter Press

Submitted by:

Jerry D. Philen, Vice-President
Compositech, Inc.

COMPOSITECH
P.O Box 2673
Pearland , Texas 77581
281-485-5033 / Fax 281-485-4594

Aug. 27,1998
Proposal 98-0826
2

Based on the information supplied, please review the following per our discussions.

Budgetary Proposal

Compositech is pleased to submit this bid for the supply of goods and services for the referenced project : Project # 19013104

Specification Section - - Belt Filter Press

1. **Scope of Supply (CANTILEVER TYPE)**
   A. One (1) 2.0m Belt Filter Press, Compositech Model BPF S7-I consisting of:

   1. Main Structural Frame of ASTM A36 W6X40 beams, Hot Dip Galvanized per ASTM 123 (or equivalent).
   2. All rollers, with the exception of the first pressure roll are constructed of A-519 tubing with a wall thickness of 1/2". Rolls are rubber coated with 1/4" Buna-N, hardness of 85 shore A.
   3. Dodge Bearings/Housing with minimum L 10 life of 100,000 hours. (or equivalent)
   4. Filter belts,endless woven PES, as required for application.
   5. Belt tracking system, proportional pneumatic system
   6. Sprayco/Stamm shower system, 304 SS Header and Shower Box Enclosures.
   7. Chicane blades with lifting mechanism six (6) rows w/ 304ss hardware. **Optional** Distribution Screw substituted depending on density of material.
   8. Belt Drive System, SEW-EURODRIVE gearmotor, mechanical. 5:1 range 30 Hp.
   9. Belt Doctoring assembly with adjustable counter weights.
   10. Belt Tensioning System, pneumatic with 304ss thrust rods and mechanical rack and pinion interlock device.

COMPOSITECH
P.O Box 2673
Pearland , Texas 77581
281-485-5033 / Fax 281-485-4594

Aug. 27,1998
Proposal 98-0828
3

11. Drip Trays,Pans, Sludge Inlet / Containment system and headbox of 304ss.
12. Gravity support grids, 304ss w/UHMW wear strips
    OPTIONAL: table rolls depending on density of material.
13. Inline Polymer mixing device, 316 ss./ or verticle type mixer.(optional)
14. Local control panel (LCP) Nema 4X FRP or equivalent.
15. Operations and Maintenance Manuals (3).

COMMERCIAL CONDITIONS

1) Price for above items provided under "Scope of Supply.

   A. ONE (1) 2.0 Meter BPF S7- I . . $ 208,000.00
   standard / manual operated controls
   (1) optional / complete system control panel . $? ?

   B. ESTIMATED PRICING for items listed below under Services provided by Purchaser (Items 6h) . . $ 65,000.00

2) Pricing is for budgeting only

3) Payment Terms: 35% With Order
   15% With Approved Drawings
   40% Due at Ship Date
   10% Upon Delivery (Net 30 Days) + Freight

4). Delivery: 18 -20 weeks after return of approved drawings.

5) Freight: F.O.B. Houston, Texas

6). **Specifically Excluded Items from the "Scope of Supply" and Materials and Services Provided by Purchaser:**

   a. Local Taxes, Special fees and licenses.
   b. Foundation Construction for any equipment proposed herein
   c. Unloading and uncrating of the proposed equipment.
   d. Installation labor for the proposed equipment .
   e. All connecting piping to the proposed equipment.
   f. All wiring between proposed equipment and control panel.
   g Storage costs associated with the proposed equipment after release from shipment to jobsite.
   h. Polymer feed system, air compressor, washwater booster pump,sludge (slurry) pump, or conveying type equipment.

```
Equipment Num        :: T-602
Eqipment Name        :: Equalization Basin
Associated PFD       :: PFD-P100-A602
Equipment Type       :: FLAT-BTM-STORAGE
Equipment Category   :: TANK
Equipment Description:: 377516 gal, Residence time 7.2 hr,
Number Required      :: 1
Number Spares        :: 0
Scaling Stream       :: 612
Base Cost            :: 350800.00
Cost Basis           :: VENDOR
Cost Year            :: 1998
Base for Scaling     :: 188129.000
Base Type            :: FLOW
Base Units           :: KG/HR
Install. Factor      :: 1.4200
Install. Factor Basis:: VENDOR
Scale Factor Exponent:: 0.5100
Scale Factor Basis   :: GARRETT
Material of Const    :: CONCRETE
Date Modified        :: 01/13/99
```

Eq. No.	T-602		
Eq. Name	Equalization Basin		
Associated PFD	A602		
Stream for Design	612		
Stream Description	Tank Inlet		
Flow Rate	188129	Kg/hr	R9809G
Average Density	0.945	g/CC	R9809G
Flowrate	876	gpm	
Flowrate	52578	gph	
Residence Time	7.2	hr	Back calculated from Information below
Calculated Volume	377,516	gal	
Volume	330,000	gal	Phoenix Bio-Systems, Inc
Flowrate	766	gpm	Merrick Appendix F "Case 1 - Equalization"
Vendor Equipment Cost	$ 325,000		Per above
Vendor Installation Cost	$ 86,000		
Prorated Additional Piping			
			Phoenix Bio-Systems, Inc. Merrick Appendix
Total Cost of Option	$3,737,350		F "Case 2",
Overhead Portion	$760,000		Design Engineering Fee + Site Preparation
Project Cost Less Overhead	$2,977,350		
Overall Piping & Installation	$371,600		Controls+Temp Control+Piping
Overall Piping & Inst %	12.48%		
Installation Cost Above	$86,000		Per above, extra piping and inst. Prorated
Additional Prorated Installati	$51,296		
Total Installation Cost	**$137,296**		
Installation Factor	**1.42**		
Scaling Exp	0.51		Garrett
Cost	**$ 350,800**		
Scaling Stream	612		
Scaling Rate	188129		
Scaling Units	Kg/hr		

CLIENT:	**NREL**	
PHONE/FAX:		
PROJECT NUMBER:		
DATE:		5/18/98
TYPE:	Anaerobic/Aerobic	
LOAD RATE:	12 g/l/d & 0.55 g/l/d	
COD:	4,173 mg/l and 334 mg/l	
FLOW:	766 gpm	

ITEM	Description	Qty	Unit Cost	Installation	Q x UC + I	Totals
Treatability						
Laboratory Analysis						
Preliminary Design						
						$0.00
Equalization						
Dimensions T-602	36'd x 44'h AOS SI St					
12 Capacity (gal)	330000 gal	1	325,000.00	86,000.00	411,000.00	
				51,296 Pipe inst		~~$411,000.00~~
Main Reactor				$137,296		$462296
Dimensions	24'd x 60'h AOS	2				
Capacity (gal)	385,000 gal	1	350,000.00	95,000.00	445,000.00	
Distribution Manifold	ICM s/s	8	4,950.00	10,500.00	50,100.00	
Overflow collection system	PVC	2	3,500.00	7,500.00	14,500.00	
Separator	10 x 12 Custom	2	24,500.00	17,500.00	66,500.00	
Sample Cocks	1" PVC	24	50.00	1,200.00	2,400.00	
Packing	TriPack PP	2600	12.00	2,500.00	33,700.00	
Insulation	9000 ft2	9050	7.00		63,350.00	
						$675,550.00
Decarbonator						
Capacity	3,000 gal	1	14,500.00	17,500.00	32,000.00	
Dimensions	6'd x 18'h				0.00	
Distributor	s/s	1	4,850.00	8,700.00	13,550.00	
Packing	TriPack 3.5 PP	400	12.00	1,500.00	6,300.00	
Demister		1	1,500.00	1,000.00	2,500.00	
Gratings	FRP	1	3,500.00	3,000.00	6,500.00	
Fan	3 hp	1	1,250.00	2,200.00	3,450.00	
Drain						
						$64,300.00

Controls						
Field Instruments		1	85,000.00	8,500.00	93,500.00	
Pressure Ind		12	250.00	750.00	3,750.00	
Temp Indicators		12	250.00	750.00	3,750.00	
pH Controller		4	2,500.00	2,000.00	12,000.00	
Biogas Meter		1	4,300.00	1,250.00	5,550.00	
Panel		1	3,800.00	2,250.00	6,050.00	
PLC		1	9,500.00	5,500.00	15,000.00	
Control computer		1	10,500.00	7,500.00	18,000.00	
Software		1	4,000.00	12,000.00	16,000.00	
						$173,600.00 *
Temp Control						
Hot water heater		0	0.00	0.00	0.00	
Heat Exch		2	6,500.00	14,500.00	27,500.00	
						$27,500.00 *
BioGas Scrubber						
Capacity	300 cf	1	6,500.00	7,600.00	14,100.00	
Grating	FRP	1	1,800.00	3,350.00	5,150.00	
Media	280	280	7.50	1,550.00	3,650.00	
						$22,900.00
Piping						
PVC		1	75,000.00	55,000.00	130,000.00	
Heat trace/Insulate		1	12,500.00	28,000.00	40,500.00	
						$170,500.00 *
Macronutrient Tank						
Tank	5000	1	8,500.00	3,500.00	12,000.00	
Nutrient Feed Pump		1	1,500.00	3,800.00	5,300.00	
Micronutrient Tank			10			
Tank	3000	1	4,500.00	3,500.00	8,000.00	
Nutrient pump		1	1,500.00	3,800.00	5,300.00	
Caustic Tank			6			
Caustic Dosing Pump	500 gpd	1	1,150.00	3,700.00	4,850.00	
Tank	5500 gal	1	9,500.00	17,500.00	27,000.00	
Iron Tank	200 gal	1	550.00	500.00	1,050.00	
Metering pump		1	850.00	1,550.00	2,400.00	
Phosphate Tank	1000 gal	1	2,500.00	2,500.00	5,000.00	
Metering pump	50 gpd	1	850.00	1,550.00	2,400.00	
						$73,300.00 ✓
			$31,400			

04 M604

Flare						
Burner	150 CFM	1	8,500.00	4,000.00	12,500.00	
Auto pilot,N-gas,air		1	4,500.00	3,500.00	8,000.00	
						$20,500.00
System Feed Pump						
Cent	766 gpm, 40' TDH s/s	2	4,900.00	2,700.00	12,500.00	
System Recirc Pump						
Cent	1500 gpm 70' TDH s/s	2	8,000.00	4,500.00	20,500.00	
						$20,500.00
Aerobic Secondary						
Feed Pump	766 gpm 40' TDH s/s	2	4,900.00	3,500.00	13,300.00	
Aerated Lagoon	0.9 mgal	1		500,000.00	500,000.00	
Floating aerators	4x25 hp, 2 x 50 hp	6	25,000.00	22,000.00	172,000.00	
						$685,300.00
Clarifier	180,000 gal	1	155,000.00	115,000.00	270,000.00	
Sludge pumps	2x25hp PD s/s	2	5,500.00	2,900.00	13,900.00	
Effluent pumps/wet wells	2x25hp cent	2	3,500.00	10,500.00	17,500.00	
						$301,400.00
Belt Thickener		1	110,000.00	42,000.00	152,000.00	
Piping	Yard	1	42,000.00	67,000.00	109,000.00	
Sludge holding Tanks/Load out		1	45,000.00	25,000.00	70,000.00	
						$331,000.00
Sand Filters						
VortiSand Filters	0	0	0.00	0.00	0.00	
Surge Tanks	0	0	0.00	0.00	0.00	
						$0.00
Chlorinator						
Hypo Storage/feed Tk	0	0	0.00	0.00	0.00	
Metering system		0	0.00	0.00	0.00	
Contact Tank	0	0	0.00	0.00	0.00	
C.T. Aerator	0	0	0.00	0.00	0.00	
						$0.00

Design Engineering Fee	all	1	250,000.00	250,000.00	
Design Drawings					
Shop Drawings					
Wiring Diagrams					
Power Requirements					
Operating Manuals					
Administratative					
					$250,000.00 +
Site Installation		1		295,000.00	
Site Preparation					
Off-Loading					
Pads					
Power Hook-Up					
Process Hook-Up					
Weather Protection					
Power Outage Protection					
Buildings	Control Building	1		125,000.00	
Fencing					
MCC				55,000.00	
Site Electrical					
Subcontractors					
					$475,000.00 +
Permits and Fees				35,000.00	
Taxes					
Insurance					
					$35,000.00 +
TOTAL					**$3,737,350.00**
Plus 12 % Contingency					**$4,185,832.00**

TOTAL 3,737,350
Less OVHD # 760,000
SUB 2,977,350
PIPE & INST * 371600
PIPE & INST % SUB 12.5%

Equipment Num	:: T-606
Eqipment Name	:: Anaerobic Digestor
Associated PFD	:: PFD-P100-A602
Equipment Type	:: FLAT-BTM-STORAGE
Equipment Category	:: TANK
Equipment Description	:: 810250 gal each, space velocity 12g COD/L/DAY
Number Required	:: 4
Number Spares	:: 0
Scaling Stream	:: ANEROVOL
Base Cost	:: 881081.00
Cost Basis	:: VENDOR
Cost Year	:: 1998
Base for Scaling	:: 810250.000
Base Type	:: SIZE
Base Units	:: GAL
Install. Factor	:: 1.0400
Install. Factor Basis	:: VENDOR
Scale Factor Exponent	:: 0.5100
Scale Factor Basis	:: GARRETT
Material of Const	:: EPOXY-LINED
Date Modified	:: 01/13/99
Notes	:: Total volume calculated by Aspen. Number of vessels determined using 950,000 gal as max per vessel. Actual volumn per vessel determined by total volume/integer num of vessels

Eq. No.	T-606		
Eq. Name	Anerobic Digestor		
Associated PFD	A602		
Stream for Design	613		
Stream Description	Reactor Inlet		
Flow Rate	188129	Kg/hr	R9809G
Liquid Density	0.985	g/cc	R9809G
Frac Solids	0		R9809G
Flowrate	840.7	gpm	
Flowrate	50442.6	gph	
Flowrate	190945.9	L/hr	
COD Concentration	**32122.9**	**mg/L**	
COD Loading	6133.7	Kg/hr	R9809G (See Conversion below)
COD Loading	147209698	g/day	
Space Velocity	12.0	g/L/day	Merrick WWT Report 11/98
Volume	12267474.8	L	
Volume	**3,241,000**	**gal**	
Cost Estimation 1			
Volume	950,000	gal	Merrick Appendix F "Case 2 - Main Reactor"
	Purchase	Installation	Phoenix Bio-Systems, Inc
Vessel Cost	**$750,000**	**$175,000**	
Distribution Manifold	**$79,200**	**$32,500**	
Overflow collection	**$62,000**	**$22,000**	
Separator	**$112,000**	**$38,700**	
Sample Cocks	**$1,800**	**$1,200**	
Packing	**$76,440**	**$2,500**	
Insulation	**$137,200**		
Total	**$1,218,640**	**$271,900**	
Prorated Additional Piping			
			Phoenix Bio-Systems, Inc. Merrick Appendix F
Total Cost of Option	$6,013,805		"Case 2",
Overhead Portion	$1,165,000		Design Engineering Fee + Site Preparation
Project Cost Less Overhead	$4,848,805		
Overall Piping & Installation	$518,100		Controls+Temp Control+Piping
Overall Piping & Inst %	10.69%		
Installation Cost Above	$271,900		Per above, extra piping and inst. Prorated
Additional Prorated Installati	$159,266		
Installation Cost	$431,166		Per above, extra piping and inst. Prorated
Installation Factor	**1.35**		
Number of Vessels	4		Round up to the nearest integer based on 950000 gal max
Volume of Each Vessel	810,250		Calculate volume based on integer number of vessels and the volume requirement.
Scaling Exponent	0.51		Garrett
Scaled Cost per Vessel	$ 1,123,653		
Total Cost	**$ 4,494,611**		4 Vessels

Cost Estimation 2				
Vessel Cost	$	493,391		Chattanogga Quote
Volume		962,651	gal	
Other Equipment	$	468,640		Merrick Appendix F "Case 2 - Main Reactor"
Total Cost	$	962,031		
Number of Vessels		4		Round up to the nearest integer based on 950000 gal max
Volume of Each Vessel		810,250		Calculate volume based on integer number of vessels and the volume requirement.
Scaling Exponent		0.51		Garrett
Scaled Cost per Vessel	$	881,081		
Total Cost	**$**	**3,524,323**		4 Vessels
Installation on Vessel		0		Field Errection Costs Included
Installation of Other Equipme	$	157,412		Installation Costs Listed in Merrick + 10.7% proation of Piping and Inst.
Installation Factor		**1.04**		

Scaling Stream	**ANEROVOL**	Total volume required per vessel, calculated by ASPEN
Scaling Rate	**810250**	
Scaling Units	**gal**	
Integer Number Required	**INUMANER**	Integer Number of Vessels calculated by ASPEN, based on max volume of 950,000 gal per vessel

	Kg/hr	COD Kg/hr	Per R9809G
Mass Flow KG/HR			
Glucose	0.000	0	
Xylose	0.000	2.2205E-07	
Unknown	0.000	0	
Colslds	0.000	0	
Ethanol	46.858	97.9330319	
Arabinose	0.000	9.3396E-09	
Galactose	0.000	0	
Mannose	0.000	0	
Glucose Oligomers	0.000	0	
Cellibiose	0.000	0	
Xylose Oligomers	0.000	1.3258E-08	
Mannose Oligomers	0.000	0	
Galactose Oligomers	0.000	0	
Arabinose Oligomers	0.000	5.3941E-10	
Xylitol	0.000	0	
Furfural	777.247	1298.00182	
HMF	261.927	398.128736	
Methane	0.000	0	
Lactic Acid	0.756	0.80855053	
Acetic Acid	301.690	322.808621	
Glycerol	0.001	0.00069248	
Succinic Acid	0.001	0.00076434	
Denaturant	0.000	0	

Oil	0.000	9.8824E-05	
Acetate Oligomers	0.000	0	
NH4Acet	3513.609	4016.05509	
		6133.7374	Kg/hr of COD

	Kg COD/Kg	
Glucose	1.07	Per Merrick WWT Report 11/98
Xylose	1.07	
Unknown	1.07	
Colslds	0.71	
Ethanol	2.09	
Arabinose	1.07	
Galactose	1.07	
Mannose	1.07	
Glucose Oligomers	1.07	
Cellibiose	1.07	
Xylose Oligomers	1.07	
Mannose Oligomers	1.07	
Gaactose Oligomers	1.07	
Arabinose Oligomers	1.07	
Xylitol	1.22	
Furfural	1.67	
HMF	1.52	
Methane	4	
Lactic Acid	1.07	
Acetic Acid	1.07	
Glycerol	1.22	
Succinic Acid	0.95	
Denaturant	3.52	
Oil	2.89	
Acetate Oligomers	1.07	
NH4Acet	1.143	

Wooley, Robert

From: Dick.Voiles@merrick.com
Sent: Tuesday, November 17, 1998 4:45 PM
To: robert_wooley@nrel.gov; Fran.Ferraro@merrick.com; Jim.Sharpe@merrick.com; James.Kassian@merrick.com; Dick.Voiles@merrick.com
Subject: Anaerobic digester reactor materials

Joe Ruocco says the reactors for all cases will be AO Smith, bolt-together, epoxy lined, carbon steel. These tanks are "cheap, easy and quick" and they are technically good for the service.

Piping can be schedule 80 PVC.

The separator which is an internal is FRP.

Agitator shaft/blades are stainless.

CLIENT:	**NREL**
PHONE/FAX:	
PROJECT NUMBER:	
DATE:	5/18/98
TYPE:	Anaerobic/Aerobic
LOAD RATE:	12 g/l/d & 0.55 g/l/d
COD:	6510 mg/l & 520 mg/l
FLOW:	1105 gpm

ITEM	Description	Qty	Unit Cost	Installation	Q x UC + I	Totals
Treatability						
Laboratory Analysis						
Preliminary Design						$0.00
Equalization						
Dimensions						
Capacity (gal)	500,000	1	450,000.00	100,000.00	550,000.00	$550,000.00
Main Reactor						
Dimensions	26' d x 60'hAOS aqua St	4				
Capacity (gal)	950,000	1	750,000.00	175,000.00	925,000.00	
Distribution Manifold	ICM s/s	16	4,950.00	32,500.00	111,700.00	
Overflow collection system	PVC	4	15,500.00	22,000.00	84,000.00	
.606 Separator T606	10 x 12 FRP Custom	4	28,000.00	38,700.00	150,700.00	
Sample Cocks	1" PVC	36	50.00	1,200.00	3,000.00	
Packing	TriPack PP	6370	12.00	2,500.00	78,940.00	
Insulation		19600	7.00		137,200.00	
			1,218,640	271,900 e 159,265 pipe inst 431,165		$1,490,540.00 1649305 1.35 INST
Decarbonator						
Capacity	5,000 gal	1	22,500.00	27,500.00	50,000.00	
Dimensions	8'd x 18				0.00	
Distributor	s/s	1	7,590.00	9,800.00	17,390.00	
Packing	TriPack 3.5 PP	700	12.00	1,500.00	9,900.00	
Demister		1	2,500.00	1,000.00	3,500.00	
Gratings	FRP	1	4,500.00	3,000.00	7,500.00	
Fan	4 hp	1	1,250.00	2,200.00	3,450.00	
Drain						
			46,740	45,000		$91,740.00

Controls						
Field Instruments		1	85,000.00	8,500.00	93,500.00	
Pressure Ind		18	250.00	750.00	5,250.00	
Temp Indicators		18	250.00	750.00	5,250.00	
pH Controller		6	2,500.00	2,000.00	17,000.00	
Biogas Meter		1	4,300.00	1,250.00	5,550.00	
Panel		1	3,800.00	2,250.00	6,050.00	
PLC		1	9,500.00	5,500.00	15,000.00	
Control computer		1	10,500.00	7,500.00	18,000.00	
Software		1	4,000.00	12,000.00	16,000.00	
						$181,600.00*
Temp Control						
Hot water heater		0	0.00	0.00	0.00	
Heat Exch		2	12,500.00	12,500.00	37,500.00	
						$37,500.00*
BioGas Scrubber						
Capacity	800 cf	1	10,800.00	7,800.00	18,600.00	
Grating	FRP	1	2,200.00	4,550.00	6,750.00	
Media	650 CF	750	7.50	1,550.00	7,175.00	
						$32,525.00
Piping						
PVC		1	125,000.00	97,000.00	222,000.00	
Heat trace/Insulate		1	32,000.00	45,000.00	77,000.00	
						$299,000.00*
Macronutrient Tank						
Tank	5000	1	8,500.00	3,500.00	12,000.00	
Nutrient Feed Pump		1	1,500.00	3,800.00	5,300.00	
Micronutrient Tank						
Tank	3000	1	4,500.00	3,500.00	8,000.00	
Nutrient pump		1	1,500.00	3,800.00	5,300.00	
Caustic Tank						
Caustic Dosing Pump	500 gpd	1	1,150.00	3,700.00	4,850.00	
Tank	5500 gal	1	9,500.00	17,500.00	27,000.00	
Iron Tank	200 gal	1	550.00	500.00	1,050.00	
Metering pump		1	850.00	1,550.00	2,400.00	
Phosphate Tank	1000 gal	1	2,500.00	2,500.00	5,000.00	
Metering pump	50 gpd	1	850.00	1,550.00	2,400.00	
						$73,300.00

Flare						
Burner	600 CFM	1	10,500.00	4,000.00	14,500.00	
Auto pilot,N-gas,air		1	6,500.00	3,500.00	10,000.00	
						$24,500.00
System Feed Pump						
Cent	1200 gpm, 40' TDH s/s	2	6,500.00	4,600.00	17,600.00	
System Recirc Pump						
Cent	3000 gpm 70' TDH s/s	2	9,500.00	7,500.00	26,500.00	
						$24,500.00
Aerobic Secondary						
Feed Pump	1100 gpm 40' TDH s/s	2	6,500.00	4,200.00	17,200.00	
T-608 Aerated Lagoon T 608	2.5 MM gal	1	100,000.00	750,000.00	850,000.00	
Floating aerators	8 x 50 hp	8	35,000.00	30,000.00	310,000.00	
						$1,177,200.00
Clarifier	275,000 gal	1	225,000.00	125,000.00	350,000.00	
Sludge pumps	2x25hp PD s/s	2	5,500.00	2,900.00	13,900.00	
Effluent pumps/wet wells	2x25hp cent	2	3,500.00	10,500.00	17,500.00	
						$381,400.00
Belt Thickener		1	210,000.00	65,000.00	275,000.00	
Piping	Yard	1	62,000.00	78,000.00	140,000.00	
Sludge holding Tanks/Load out		1	45,000.00	25,000.00	70,000.00	
						$485,000.00
Sand Filters						
VortiSand Filters	0	0	0.00	0.00	0.00	
Surge Tanks	0	0	0.00	0.00	0.00	
						$0.00
Chlorinator						
Hypo Storage/feed Tk	0	0	0.00	0.00	0.00	
Metering system		0	0.00	0.00	0.00	
Contact Tank	0	0	0.00	0.00	0.00	
C.T. Aerator	0	0	0.00	0.00	0.00	
						$0.00

Design Engineering Fee	all	1	475,000.00	475,000.00	
Design Drawings					
Shop Drawings					
Wiring Diagrams					
Power Requirements					
Operating Manuals					
Administratative					
					$475,000.00
Site Installation		1		475,000.00	
Site Preparation					
Off-Loading					
Pads					
Power Hook-Up					
Process Hook-Up					
Weather Protection					
Power Outage Protection					
Buildings	Control Building	1		125,000.00	
Fencing					
MCC				55,000.00	
Site Electrical					
Subcontractors					
					$655,000.00
Permits and Fees				35,000.00	
Taxes					
Insurance					
					$35,000.00
TOTAL					**$6,013,805.00**
Plus 12 % Contingency					**$6,735,461.60**

TOTAL 6,013,805
Less OVHD 4,848,805
PIPE INST 518,100
% OF TOTAL 10.7%

CHATTANOOGA BOILER AND TANK CO

PHONE CALL

FOR Hank DATE 4/27 TIME 5:00 PM
M Jason Mr. Riddell
OF Chatanooga Boiler Tank
PHONE ☐ FAX ☐ MOBILE (423) 755-6718 AREA CODE NUMBER EXTENSION
MESSAGE RE. Quote - if dont talk to him today, you can talk to Joe Giada at (423) 266-7118
GK
SIGNED

PHON
X RETURN YOUR C
PLEASE
WILL C AGAI
CAME SEE Y
WANTS SEE Y
TOPS FORM 40

March 25, 1998

Delta-T
460 McLaws Circle, Suite 150
Williamsburg, VA 23185

Attention: Mr. Hank Majdeski

Reference: DF-068
CB&T Est. 98-069

Dear Sir:

I am pleased to quote a budget price to furnish the necessary material and labor to design, detail, fabricate, erect, and test thirty-seven (37) field tanks as per the attached sketches and the provided specifications, as follows:

1) Budget pricing is quoted as:

T-301 (VALVE/10)

	Qty	Minnesota	North Carolina
F-300A/W	23	$11,348,000	$10,796,000
F-306A/B	2	$ 621,000	$ 598,000
F-400A/L	10	$ 1,733,000	$ 1,639,000
F-404A/B (2.5 psig)	2	$ 201,000	$ 190,000
F-404A/B (15 psig)	2	$ 317,000	$ 298,000

2) Estimated net empty weight and field labor MH per tank are:

	Qty	Weight (tons)	Field MH
F-300 A/W	23	2913	40,000
F-306A/B	2	147	2,700
F-400A/L	10	334	8,300
F-404A/B (2.5 psig)	2	30	1,100
F-404 A/B (15 psig)	2	61	1,600

3) Estimated pricing is inclusive of all sales and use taxes, please advise if project is non-taxable.

4) Tanks will be designed per API-650 with the exception of F-404A/B (15 psig) which will be designed in accordance with ASME Sect. VIII.

CHATTANOOGA BOILER AND TANK CO.

1011 E. MAIN STREET (423) 266-711

P.O. BOX 110 / CHATTANOOGA, TN 37401 \ FAX (423) 755-670

Thank you for the opportunity to provide this estimate. Please contact me if you require any additional information or a firm bid and subsequent construction schedule is needed.

Sincerely,

Jason Riddell
Project Manager

2

CBT MANUFACTURING CO., INC.

P.O. BOX 11566 CHATTANOOGA, TN 37401

CUSTOMER Delta - T	JOB NO. Est # 98 - 069
PROJECT	
ITEM F - 300 A/W	PAGE 1 OF 5

Roof & Bottom : Lap Weld - Top Side Only

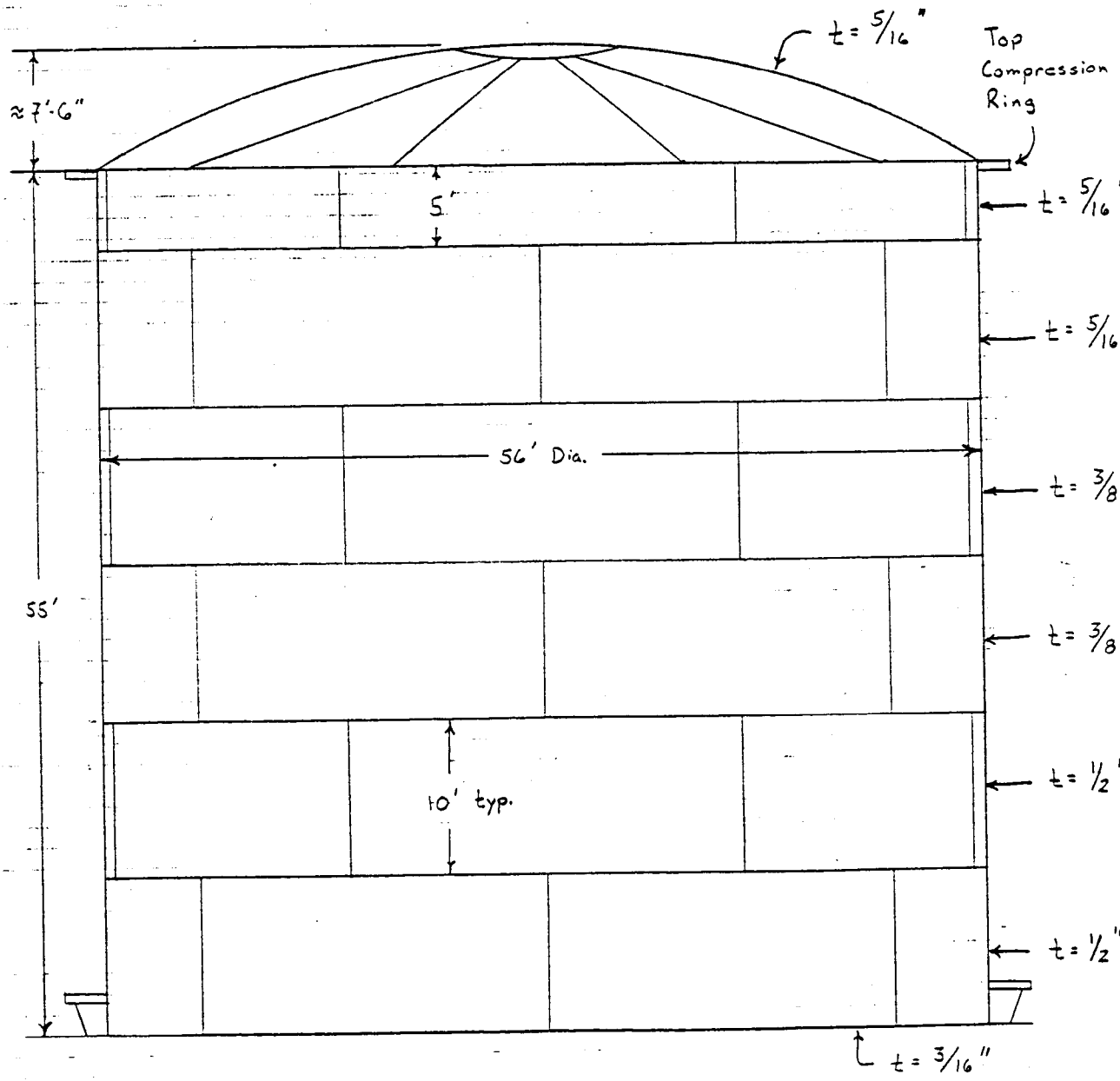

REVISION	
BY/DATE	JR 3-24-98
CHKD/DATE	

Summarized Field Fabricted Tank Specification

Preliminary

Item	Quantity	Description	Diameter, Ft	Height, FT	Working vol, Gal Ea	Materials	Fluid Type	Fluid Specific Gravity	Design Pressure PSIG	De Temp
1	23	F-300A/W	56	55	962,651	304L	Slurry, 8 wgt % SS, 4 wgt % DS	1.06	2.5	-45
2	2	F-306A/B	49	48	643,226	304L	Slurry, 8 wgt % SS, 12 wgt % DS	1.06	2.5	-45
3	10	F-400A/L	36	37	267,631	304L	Slurry, 5 wgt % SS, 1 wgt % DS	1.06	2.5	-45
4	2	F-404A/B	24	24	77,155	304L	Slurry, 2 wgt % SS, 1 wgt % DS	1.01	15.0	-45
5	2	F-404A/B	24	24	77,155	304L	Slurry, 2 wgt % SS, 1 wgt % DS	1.01	2.5	-45

Notes

1) Tanks to be designed to API-650 or supplier recommended equal suitable for ethanol plant purposes
2) Budget pricing needed for union & non-union basis
3) Require estimated field direct labor MH for installation of each item for each unit
4) Assume union location in Minnesota....Non-union location in North Carolina
5) Provided estimated net empty weight for each item
6) Pricing and manhour estimates should be current day basis

					Nozzle Schedule (Each Tank)						
24" Manway	20" Hatch	3" Level Connection	12" Process Inlet	12' Process Outlet	20" Vent	12" Agitiator	6" Sparger	8" CIP	6" Steam	3/4" Thermowel	1" Le Swit
1	1	2	1	1	1	3	6	2	1	2	1
1	1	2	1	1	1	3	6	2	1	2	1
1	1	2	1	1	1	2	6	2	1	2	1
1	1	2	1	1	1	1	6	2	1	2	1
1	1	2	1	1	1	1	6	2	1	2	1

```
Equipment Num        :: T-608
Eqipment Name        :: Aerobic Digestor
Associated PFD       :: PFD-P100-A603
Equipment Type       :: LINED-PIT
Equipment Category   :: REACTOR
Equipment Description:: 19500000 gal, 16.3 day residence time
Number Required      :: 1
Number Spares        :: 0
Scaling Stream       :: AEROBVOL
Base Cost            :: 635173.00
Cost Basis           :: MERRICK98
Cost Year            :: 1998
Base for Scaling     :: 19506756.000
Base Type            :: SIZE
Base Units           :: GAL
Install. Factor      :: 1.0000
Install. Factor Basis:: MERRICK98
Scale Factor Exponent:: 1.0000
Material of Const    :: POLYMER LINED
Date Modified        :: 01/13/99
Notes                :: Using Goble Sampson 16.3 day residence time
```

Eq. No.	T-608			
Eq. Name	Aerobic Digestor			
Associated PFD	A603			
Stream for Design	618			
Stream Description	Reactor Inlet			
Flow Rate	185782	Kg/hr	R9809G	
Liquid Density	0.984	g/cc	R9809G	
Frac Solids	0		R9809G	
Flowrate	831.1	gpm		1196733.523
Flowrate	1,196,734	gal/day		
Flowrate	188755.4	L/hr		
COD Concentration	**2323**	**mg/L**		

Sizing Option 1			Phoenix Bio-Systems, Inc, Merrick Report
COD Loading	438.4	Kg/hr	R9809G (See Conversion below)
COD Loading	10,522,048	g/day	
Space Velocity	0.55	g/L/day	Merrick WWT Report 11/98
Volume	19,130,996	L	
Volume	**5,054,000**	**gal**	

Sizing Option 2			Goble Sampson, Merrick Report
Residence Time	16.3	days	
Volume	**19,506,756**	**gal**	

Cost Estimation

Vessel Cost	**$504,700**		Merrick Base
Volume	**15,499,818**	gal	
Installation Cost	$0		Field Errected
Installation Factor	**1.00**		
Scaling Exponent	1.00		Garrett

Scaled Cost Option 1	**$**	**164,567**	Size probably not reasonable
Scaled Cost Option 2	**$**	**635,173**	

Scaling Stream	**AEROBVOL**	Total volume required per vessel, calculated by ASPEN
Scaling Rate	**17,951,003**	
Scaling Units	**gal**	

	Kg/hr	COD Kg/hr	Per R9809G
Mass Flow KG/HR			
Glucose	0.00	0	
Xylose	0.00	1.5543E-08	
Unknown	0.00	0	
Colslds	0.00	0	
Ethanol	3.25	6.78210016	
Arabinose	0.00	0	
Galactose	0.00	0	
Mannose	0.00	0	
Glucose Oligomers	0.00	0	

Cellibiose	0.00	0	
Xylose Oligomers	0.00	0	
Mannose Oligomers	0.00	0	
Galactose Oligomers	0.00	0	
Arabinose Oligomers	0.00	0	
Xylitol	0.00	0	
Furfural	54.04	90.2384834	
HMF	18.21	27.6783336	
Methane	2.49	9.95074	
Lactic Acid	0.05	0.05659851	
Acetic Acid	21.11	22.5878391	
Glycerol	0.00	0.00069248	
Succinic Acid	0.00	5.3504E-05	
Denaturant	0.00	0	
Oil	0.00	6.9176E-06	
Acetate Oligomers	0.00	0	
NH4Acet	245.95	281.123822	
	345.093	438.418669	Kg/hr of COD

	Kg COD/Kg	
Glucose	1.07	Per Merrick WWT Report 11/98
Xylose	1.07	
Unknown	1.07	
Colslds	0.71	
Ethanol	2.09	
Arabinose	1.07	
Galactose	1.07	
Mannose	1.07	
Glucose Oligomers	1.07	
Cellibiose	1.07	
Xylose Oligomers	1.07	
Mannose Oligomers	1.07	
Gaactose Oligomers	1.07	
Arabinose Oligomers	1.07	
Xylitol	1.22	
Furfural	1.67	
HMF	1.52	
Methane	4	
Lactic Acid	1.07	
Acetic Acid	1.07	
Glycerol	1.22	
Succinic Acid	0.95	
Denaturant	3.52	
Oil	2.89	
Acetate Oligomers	1.07	
NH4Acet	1.143	

AERATOR SIZING CALCULATIONS FOR:

National Renewable Energy Lab

Goble Sampson
Aeration Lagoon
Size

Date: 11/20/98

Design Criteria

To convert from mg/l to lbs/day use the following equation:
mg/l x 8.34 lb / 1,000,000 x Daily flow (MGD)

Flow :	1.17	Million Gallons per Day		
BOD demand :	1660	mg/l converts to:	16198	lbs/day
Total Sus Solids:	200	mg/l converts to:	1952	lbs/day
TKN :	0	mg/l converts to:	0	lbs/day

The pond volume is found using the following equation:

V = D/3 (As + Ab + squareroot(As * Ab))
Where:

As = surface area D = water depth
Ab = bottom area V =cell volume in cu.ft.

Detention time is found by dividing volume by daily flow.

	Cell 1		Cell 2		Cell 3	
Width:	300.00	ft.	150.00	ft.		ft.
Length:	600.00	ft.	300.00	ft.		ft.
Depth:	15.00	ft.	12.00	ft.		ft.
Volume:	2129726	cu.ft.	418856	cu.ft.	0	cu.ft.
Capacity:	15930352	Gal	3133043	Gal	0	Gal
Det.time:	13.62	Days	2.68	Days	0.00	Days

Oxygen required for BOD removal

For this application we are using: 2.00 lbs of O2 for each pound of BOD per day (under working conditions). A residual oxygen level of 2.00 mg/l should be maintained in the pond at all times.

BOD Oxygen requirement calculation.

16198 lbs of BOD/day x 2.00 lb of O2/lb BOD = 32396 lb O2/day

TKN Oxygen requirement calculation:

0 lbs of TKN/day x 4.60 lb of O2/lb TKN = 0 lb O2/day

Total Oxygen required per day is the total of the BOD and TKN demands.

32396 lbs/day + 0 lbs/day = 32396 lbs O2 (under field conditions

MERRICK
Engineers & Architects

Engineering Calculation Sheet

Date 8/27/98 Sheet of
Contract
Calculation No.

Subject NIREL

Revision	By	Date	Chk'd	Date

AEROBIC LAGOON COST

SIZE: 2@ 500' x 250' x 10' = 1250000 ft³ (193685 ft³)
= 46300 yd³

EXCAVATION @ $5.00 per yd³ = $463,000 191,867

LINER: 2@ 500 x 250 = 125000 ft² = 250,000

@ $1.50 per yd² = $\frac{250,000}{9} \times 1.50$ = $41,700

total = 463,000
41,700
$504,700
$505

20550
212,718

Per Phone Conversation w/ Steve 8/28/98:

Increasing BOD to ~ 150,000 mg/L will increase price to

Equipment Num	:: T-610
Eqipment Name	:: Clarifier
Associated PFD	:: PFD-P100-A603
Equipment Type	:: CLARIFIER
Equipment Category	:: SEPARATOR
Equipment Description	:: 195289 gal, Residence time 3.9 hr.
Number Required	:: 1
Number Spares	:: 0
Scaling Stream	:: 618
Base Cost	:: 174385.00
Cost Basis	:: VENDOR
Cost Year	:: 1998
Base for Scaling	:: 185782.000
Base Type	:: FLOW
Base Units	:: KG/HR
Install. Factor	:: 1.9600
Install. Factor Basis	:: VENDOR
Scale Factor Exponent	:: 0.5100
Scale Factor Basis	:: GARRETT
Material of Const	:: CONCRETE
Utility Calc.	:: ASPEN FORT BLCK
Utility Stream	:: WT610
Utility Type	:: POWER
Date Modified	:: 01/13/99
Notes	:: Expected Power Req: 4 kW.

Eq. No.	T-610		
Eq. Name	Clarifier		
Associated PFD	A603		
Stream for Design	618		
Stream Description	Primary Inlet		
Flow Rate	185782	Kg/hr	R9809G
Average Density	0.984	g/CC	R9809G
Flowrate	831.1	gpm	
Flowrate	49863.9	gph	
Residence Time	3.9	hr	Back calculated from Information below
Calculated Volume	195,289	gal	
Power Requirement	5	hp	Estimated
	3.7	kW	
Volume	180,000	gal	Phoenix Bio-Systems, Inc
Flowrate	766	gpm	Merrick Appendix F "Case 1 - Equalization"
Vendor Equipment Cost	**$ 155,000**		Per above
Vendor Installation Cost	$ 115,000		Per above
Prorated Additional Piping			
			Phoenix Bio-Systems, Inc. Merrick Appendix
Total Cost of Option	$3,737,350		F "Case 1",
Overhead Portion	$760,000		Design Engineering Fee + Site Preparation
Project Cost Less Overhead	$2,977,350		
Overall Piping & Installation	$371,600		Controls+Temp Control+Piping
Overall Piping & Inst %	12.48%		
Installation Cost Above	$115,000		From above
Additional Prorated Installati	$33,698		
Total Installation Cost	**$148,698**		Per above, extra piping and inst. Prorated
Installation Factor	**1.96**		
Scaling Exp	0.51		
Cost	**$ 174,385**		Scaled to 831 gpm from 766 gpm
Scaling Stream	618		
Scaling Rate	185782		
Scaling Units	Kg/hr		

CLIENT:	NREL
PHONE/FAX:	
PROJECT NUMBER:	
DATE:	5/18/98
TYPE:	Anaerobic/Aerobic
LOAD RATE:	12 g/l/d & 0.55 g/l/d
COD:	4,173 mg/l and 334 mg/l
FLOW:	766 gpm

ITEM	Description	Qty	Unit Cost	Installation	Q x UC + I	Totals
Treatability						
Laboratory Analysis						
Preliminary Design						
						$0.00
Equalization						
Dimensions T-602	36'd x 44'h AOS SI SI					
602 Capacity (gal)	330000 gal	1	325,000.00	86,000.00	411,000.00	
				51,296 PIP&INST		$444,000.00-
Main Reactor				$137,296		$462296
Dimensions	24'd x 60'h AOS	2				
Capacity (gal)	385,000 gal	1	350,000.00	95,000.00	445,000.00	
Distribution Manifold	ICM s/s	8	4,950.00	10,500.00	50,100.00	
Overflow collection system	PVC	2	3,500.00	7,500.00	14,500.00	
Separator	10 x 12 Custom	2	24,500.00	17,500.00	66,500.00	
Sample Cocks	1" PVC	24	50.00	1,200.00	2,400.00	
Packing	TriPack PP	2600	12.00	2,500.00	33,700.00	
Insulation	9000 ft2	9050	7.00		63,350.00	
						$675,550.00
Decarbonator						
Capacity	3,000 gal	1	14,500.00	17,500.00	32,000.00	
Dimensions	6'd x 18'h				0.00	
Distributor	s/s	1	4,850.00	8,700.00	13,550.00	
Packing	TriPack 3.5 PP	400	12.00	1,500.00	6,300.00	
Demister		1	1,500.00	1,000.00	2,500.00	
Gratings	FRP	1	3,500.00	3,000.00	6,500.00	
Fan	3 hp	1	1,250.00	2,200.00	3,450.00	
Drain						
						$64,300.00

Controls						
Field Instruments		1	85,000.00	8,500.00	93,500.00	
Pressure Ind		12	250.00	750.00	3,750.00	
Temp Indicators		12	250.00	750.00	3,750.00	
pH Controller		4	2,500.00	2,000.00	12,000.00	
Biogas Meter		1	4,300.00	1,250.00	5,550.00	
Panel		1	3,800.00	2,250.00	6,050.00	
PLC		1	9,500.00	5,500.00	15,000.00	
Control computer		1	10,500.00	7,500.00	18,000.00	
Software		1	4,000.00	12,000.00	16,000.00	
						$173,600.00 *
Temp Control						
Hot water heater		0	0.00	0.00	0.00	
Heat Exch		2	6,500.00	14,500.00	27,500.00	
						$27,500.00 *
BioGas Scrubber						
Capacity	300 cf	1	6,500.00	7,600.00	14,100.00	
Grating	FRP	1	1,800.00	3,350.00	5,150.00	
Media	280	280	7.50	1,550.00	3,650.00	
						$22,900.00
Piping						
PVC		1	75,000.00	55,000.00	130,000.00	
Heat trace/Insulate		1	12,500.00	28,000.00	40,500.00	
						$170,500.00 *
Macronutrient Tank						
Tank	5000	1	8,500.00	3,500.00	12,000.00	
Nutrient Feed Pump		1	1,500.00	3,800.00	5,300.00	
Micronutrient Tank						
Tank	3000	1	4,500.00	3,500.00	8,000.00	
Nutrient pump		1	1,500.00	3,800.00	5,300.00	
Caustic Tank						
Caustic Dosing Pump	500 gpd	1	1,150.00	3,700.00	4,850.00	
Tank	5500 gal	1	9,500.00	17,500.00	27,000.00	
Iron Tank	200 gal	1	550.00	500.00	1,050.00	
Metering pump		1	850.00	1,550.00	2,400.00	
Phosphate Tank	1000 gal	1	2,500.00	2,500.00	5,000.00	
Metering pump	50 gpd	1	850.00	1,550.00	2,400.00	
						$73,300.00 ✓

604 M 604

$31,400

Flare						
Burner	150 CFM	1	8,500.00	4,000.00	12,500.00	
Auto pilot,N-gas,air		1	4,500.00	3,500.00	8,000.00	
						$20,500.00
System Feed Pump						
Cent	766 gpm, 40' TDH s/s	2	4,900.00	2,700.00	12,500.00	
System Recirc Pump						
Cent	1500 gpm 70' TDH s/s	2	8,000.00	4,500.00	20,500.00	
						$20,500.00
Aerobic Secondary						
Feed Pump	766 gpm 40' TDH s/s	2	4,900.00	3,500.00	13,300.00	
Aerated Lagoon	0.9 mgal	1		500,000.00	500,000.00	
Floating aerators	4x25 hp, 2 x 50 hp	6	25,000.00	22,000.00	172,000.00	
						$685,300.00
610 Clarifier T.610	180,000 gal	1	155,000.00	115,000.00 +33,750 148,750	~~270,000.00~~	$ 303,750
Sludge pumps	2x25hp PD s/s	2	5,500.00	2,900.00	13,900.00	
Effluent pumps/wet wells	2x25hp cent	2	3,500.00	10,500.00	17,500.00	
						$301,400.00
Belt Thickener		1	110,000.00	42,000.00	152,000.00	
Piping	Yard	1	42,000.00	67,000.00	109,000.00	
Sludge holding Tanks/Load out		1	45,000.00	25,000.00	70,000.00	
						$331,000.00
Sand Filters						
VortiSand Filters	0	0	0.00	0.00	0.00	
Surge Tanks	0	0	0.00	0.00	0.00	
						$0.00
Chlorinator						
Hypo Storage/feed Tk	0	0	0.00	0.00	0.00	
Metering system		0	0.00	0.00	0.00	
Contact Tank	0	0	0.00	0.00	0.00	
C.T. Aerator	0	0	0.00	0.00	0.00	
						$0.00

Design Engineering Fee	all	1	250,000.00	250,000.00	
Design Drawings					
Shop Drawings					
Wiring Diagrams					
Power Requirements					
Operating Manuals					
Administratative					
					$250,000.00 +
Site Installation		1		295,000.00	
Site Preparation					
Off-Loading					
Pads					
Power Hook-Up					
Process Hook-Up					
Weather Protection					
Power Outage Protection					
Buildings	Control Building	1		125,000.00	
Fencing					
MCC				55,000.00	
Site Electrical					
Subcontractors					
					$475,000.00 +
Permits and Fees				35,000.00	
Taxes					
Insurance					
					$35,000.00 +
TOTAL					**$3,737,350.00**
Plus 12 % Contingency					**$4,185,832.00**

TOTAL 3,737,350
Less OVHD # 760,000
SUB 2,977,350
PIP & INST * 371600
PIP & INST % SUB 12.5%

```
Equipment Num        :: T-630
Eqipment Name        :: Recycled Water Tank
Associated PFD       :: PFD-P100-A601
Equipment Type       :: FLAT-BTM-STORAGE
Equipment Category   :: TANK
Equipment Description:: 13218 gal, Residence time 20 min, 2.5 psig
Number Required      :: 1
Number Spares        :: 0
Scaling Stream       :: 602
Base Cost            :: 14515.00
Cost Basis           :: VENDOR
Cost Year            :: 1998
Base for Scaling     :: 179446.000
Base Type            :: FLOW
Base Units           :: KG/HR
Install. Factor      :: 1.4000
Install. Factor Basis:: DELTA-T98
Scale Factor Exponent:: 0.7450
Scale Factor Basis   :: VENDOR
Material of Const    :: CS
Date Modified        :: 01/13/99
```

Eq. No.		T-630			
Eq. Name		Recycle Water Tank			
Associated PFD		A601			
Stream for Design		602			
Stream Description		Primary Inlet			
Flow Rate		179446	Kg/hr	R9809G	
Average Density		0.999	g/CC	R9809G	
Flowrate		790.7	gpm		
Flowrate		47440.1	gph		
Residence Time		20	min	Assumed	
Calculated Volume		15,813	gal		
Volume		13,218	gal	Springs Fabrication	
Vendor Equipment Cost	$	11,300		Per above	
50% Larger	$	17,000			19,827
50% Smaller	$	7,500			6,609
Scaling Exp (Small->Large)		0.745			
Cost	**$**	**14,515**		Scaled Cost	
Scaling Stream		602			
Scaling Rate		179446			
Scaling Units		Kg/hr			

SPRINGS FABRICATION, INC.
4751 Fox Street • Denver, CO 80216
Fax: (303) 292-5430 Phone: (303) 294-0585
e-mail: gary@springsfab.com

Industrial Metal Products
ASME Pressure Vessels – Tanks – Piping – Skids
Filter Housings – Stainless Alloy Products – Frames

Fax Cover Sheet

To:	Mr. Jim Kassian	**From:**	Gary Quick
Company:	Merrick & Company 1304	**Pages:**	One
Phone:	751-0741	**Date:**	August 26, 1998
Fax:	751-2581	**Re:**	Budgetary Tank Figures (T-630)

☐ **Urgent** X **for Review** ☐ **Please Comment** ☐ **Please Reply**

Message: Dear Mr. Kassian

Following is the estimate based on our phone conversation today. Tanks were figured with flat heads and one Bottom Sludge clean out door. Dimensions on the tank are 15' diameter and 10' side shell. 13218 gal

STD DUTY

STD — $11,300
50% Larger — $17,000
50% Smaller — $7,500

Per phone w/Gary
Aug 26, 1998

HEAVY DUTY

Standard size (as above)	$17,800.00
50% larger	$26,700.00
50% smaller	$11,800.00

Thank you for the inquiry Jim. Hope this helps, please let me know if we can be of any further help.

Darren Hunt, one of our project managers did the estimating.

Sincerely,

Gary Quick

T-704 Firewater Storage tank

From I:\Process\3104\Softwood\P9807C-1

444,777 gal

$(.7854 \times (\phi)^2 \times (HT) \times 7.48) = \boxed{60'\phi \times 22' \text{ TALL}} = 465,280$ gal

$22' \text{ tall} \rightarrow \frac{62.4 \ \#/FT^3}{1728 \ IN^3/FT^3} \times (22' \times 12) = 9.53$ psig

.1875 wall $\approx$ S.F. 4 using A36 9150 psi

T-630 Recycled H_2O TANK

13095 gal

$(.7854 \times (\phi^2) * (HT) * 7.48) = \boxed{12'\phi \times 18' \text{ TALL}} = 15250$ gal

$18' \text{ tall} \rightarrow \frac{62.4}{1728} \times (18 \times 12) = 7.8$ psig

.125 wall $\approx$ SF=8 using A36 4500 psi

Jim Kassian
8-26-98

Appendix G

Wastewater Treatment ASPEN Model

Wastewater Treatment Model
Victoria Putsche
November 11, 1998

A wastewater treatment model has been developed and incorporated into an NREL base model, W9806F. The resulting model, P9808B, has been checked into the Basis database. This report describes the assumptions behind the wastewater model. Attachment 1 contains a print-out from the model describing all of the changes, applicable ASPEN code (e.g., flowsheet, design-specs), and a block flow diagram with all design-specs and FORTRAN blocks for this section.

The overall design of the wastewater treatment system has not changed significantly over the NREL base model. It is still comprised of anaerobic digestion (T-606) followed by aerobic treatment (T-608) (Ruocco 1998). The new model, however, has simplified the flowsheet somewhat by replacing the RYIELD reactor with a user subroutine (USRANR). Now, the unreactable components (e.g., ash, lignin, water) do not need to be separated out prior to the digestor. Thus, the blocks associated with the separation and re-mixing (ASHSEP, UNCONVT) have been eliminated.

Another simplification of the design is in the aeration basins. Originally, the system was an oxygen fed system with a pressure swing adsorption unit to separate oxygen from air. The current design is an aerated lagoon with floating aerators. Since it is a lagoon, no temperature control will be provided. It will receive the effluent from the anaerobic digestors (618) at the temperature of digestion (35 ^{o}C) and so the aerobic feed cooler, H-601, is no longer needed. The temperature of the aerobic system was decreased to ambient, 20 ^{o}C, in the model since it is a lagoon. Any heat removed by the temperature drop is not included in the modeling since it represents heat dissipation to the atmosphere and would not require a cooling load.

As noted earlier, the anaerobic system is modeled using a user subroutine USRANR. A copy of the subroutine is also in the database as well as Attachment 2. The subroutine requires 5 real inputs from the user (in this order): chemical oxygen demand (COD) conversion, fraction of theoretical methane yield on COD, fraction of cell mass yield on COD, mole fraction of methane in the outlet gas, and the fraction of soluble sulfate components that are converted to hydrogen sulfide. In the current design, the COD conversion is set to 0.9, the fraction of theoretical methane conversion is 1.0, the fraction of COD converted to cell mass is 0.03 (Ruocco 1998). Testing of the enzyme sample showed a conversion of 73% of the COD, but it is expected that after full incubation, this sample would show conversions of 90-100% (Pinnacle 1998). Thus, the COD conversion factor is reasonable. It should be noted that the softwood process obtained digestibilities that were similar to the enzyme case and so the assumptions outlined above would be valid for this process. Tests on the countercurrent sample, however, were not promising with conversions of only 36% (Pinnacle 1998). When this process is modeled, different assumptions or more information should be obtained.

The expected fraction of methane in the off-gas is set to 0.75; in general, depending on the complexity of the feed, it can vary from 50 to 90% (Ruocco 1998). In the testing performed on

the NREL SSCF effluent from the enzyme process, the methane concentration was only 61.4% (Pinnacle 1998). Pinnacle expects that without CO_2 removal, the maximum methane concentration would be 70% (Nagle 1998). The proposed process, however, has a proprietary decarbonator technology which will likely increase the methane concentration. Thus, the assumed value of 75% for the enzyme case is reasonable.

The theoretical yield of methane on COD is 350 liters/kg COD converted (0.229 kg/kg at 25 ^{o}C). The mass conversion decreases to 0.221 kg/kg at the conditions of the digester (i.e., 35 ^{o}C). The subroutine uses the total COD loading in kg/hr (CODTOT) from the COMMON block, WWLOAD and the values specified by the user to determine the amount of methane and cell mass produced. Only soluble, carbon-containing compounds are considered to be converted. However, insoluble components such as cellulose and xylan may be converted by as much as 40% and 50%, respectively (Nagle 1998). For conservatism, no conversion of these compounds was assumed. One soluble compound, ammonium acetate, is currently modeled in the CISOLID substream, but will be converted in wastewater treatment.

After calculating the amount of methane and cell mass generated, the routine determines the amount of CO_2 that could be produced via mass balance (CO_2(A)) . If this amount is less than that predicted assuming that methane is present at 75 mol% in the off-gas (CO_2(B)), then the amount of CO_2 produced is set equal to the CO_2(A) and the amount of methane in the off-gas will be greater than 75 mol%. If CO_2(A) is greater than CO_2(B), then the amount of CO_2 produced is set equal to 25 mol% of the off-gas and the remaining mass (excess CO_2) is assumed to be converted to water, see Attachment 5.

For example, a kg of glucose with a COD of 1.07 will produce 1.07 kg of COD which corresponds to 0.213 kg of methane (i.e., 0.221 kg CH4/kg COD*1.07 kg COD*90% conversion) and 0.0321 kg of cell mass (i.e., 0.03 kg cell mass/kg COD*1.07 kg COD). Since only 1 kg (not 1.07 kg) of glucose can be converted, the amount of mass available for conversion to carbon dioxide is 0.7549 kg (i.e., 1 - 0.213 - 0.0321). On a molar basis, the biogas would then be comprised of 0.0133 kg-moles of methane (43.6 mol%) and 0.0172 kg-moles of carbon dioxide (56.4 mol%). If the amount of methane is fixed at 75 mol%, the amount of carbon dioxide can only be 25% and so the amount produced must be reduced. The remaining mass is assumed to be converted to water.

Attachment 2 contains a spreadsheet showing this calculation for most of the components present in the wastewater. In general, as shown on the spreadsheet, the predicted split between methane and CO_2 in the off-gas is roughly 50:50 mol% for all compounds. Thus, in all cases, the amount of CO_2 produced will be fixed at 25 mol% and some water will be generated.

In addition to these products, anaerobic digestion will degrade sulfur-containing compounds to H_2S and other compounds. For this analysis, all soluble sulfur-containing compounds (e.g., sulfuric acid, ammonium sulfate) are assumed to be degraded on a mole per mole basis to hydrogen sulfide. The remaining mass is assumed to be converted to water. For example, a mole of ammonium sulfate (MW 132) would produce one mole (34 g) of hydrogen sulfide and 98 g of

water. A mole of sulfuric acid (MW 98) would also produce one mole (34 g) of hydrogen sulfide and 64 g of water. On a mass conversion basis, 26% of the mass of ammonium sulfate and 35% of the sulfuric acid are converted to hydrogen sulfide, respectively.

As in the methane calculations, one soluble component, ammonium sulfate, is currently carried in the CISOLID substream. Gypsum, an insoluble component, will also be degraded to H_2S (Nagle 1998a). Although it is not currently present in the waste streams, the subroutine should be modified so that gypsum is also converted.

The assumption of 100% conversion of all sulfur-containing compounds to hydrogen sulfide may need to be revisited. The microbes will likely have an upper tolerance level. In fact, levels of 200-1,500 ppm may be considered toxic (Nagle 1998). Finally, the production of H_2S may have a negative effect on the production of methane due to competition for hydrogen. In general, for every mole of H_2S produced, the potential methane production is decreased by 0.5 moles (Nagle 1998). Thus, the subroutine should be changed to better reflect expected yields.

The subroutine does not perform a heat balance. Any load, however, is expected to be negligible and can generally be accomplished with ambient air cooling. The stream is flashed externally in T606FLSH.

The aerobic system is modeled as an RSTOIC block. In this block, it is assumed that 90% of the inlet COD is converted to CO_2 and water (60%) and cell mass (30%). In the conversion to cell mass, no attempt is made to balance the atoms; one pound of cell mass is produced for every pound of component degraded. Thus, the stoichiometric coefficient for cell mass is equivalent to the ratio of the component molecular weight to the cell mass molecular weight (i.e., kg component/kgmol component/kg cell mass/kg mol cell mass). Since the atoms are not balanced and the heating value of the cell mass is greater than most components, for every pound of cell mass generated, there is a net increase in the heat available. This is not problematic as long as the overall heat balance over the reactor does not increase. For the proposed system, (i.e., 60% aerobic digestion and 30% conversion to cell mass), the heat content of the products is less than the heat content of the feed. This reduction is due primarily to the 2 to 1 ratio of combustion products to cell mass. If the conversion of cell mass rises significantly, this may no longer hold true. Attachment 3 contains a print-out of a spreadsheet that can be used to calculate the heat in and out. This spreadsheet along with the spreadsheet showing the predicted methane/CO_2 split are contained in a single workbook, WWTCALCS.XLS that has been added to the database.

As in the original design, the wastewater treatment system requires chemicals and nutrients. Table 1 provides a summary of typical addition rates (kg/kg COD) and costs (Ruocco 1998). In addition, typical costs for these components are also provided (Ruocco 1998). All of these chemicals will be modeled as the component WNUTR in stream 630 and they are assumed to always be added in the same proportion. The flowrate of this stream is controlled by the FORTRAN block WWNUT1. Here, the total for all of the components in kg/kg COD (3.67E-2) is ratioed against the inlet COD loading. The cost for these nutrients was determined as the average of all costs ($0.11/lb).

Table 1
WWT Nutrient and Chemical
Demands and Costs

Chemical	**kg/kg COD**	**($/kg)**
Nitrogen (Urea)	2.7E-3	0.44
Phosphate (H_3PO4)	9.0E-4	0.35
Micro-Nutrients	1.5E-4	1.11
Caustic	3.3E-2	0.22

Following aerobic treatment, polymer is added for the filter press. The polymer is also modeled as the component WNUTR in stream 631. Addition of the polymer is controlled by the FORTRAN block WWNUT2. The cost of the polymer is $2.50/lb and it is added at 7.63E-4 kg/kg COD (Ruocco 1998).

Three other FORTRAN blocks, CODCALC1, CODCALC2 and CODEND were developed to calculate the COD and biochemical oxygen demand (BOD) for the anaerobic digestor inlet (613), the aerobic digestor inlet (618) and the effluent from the process (619A), respectively. In all cases, the COD is equivalent to the theoretical oxygen demand for complete combustion. Only soluble, carbon-containing compounds are included in the calculation. As noted earlier, ammonium acetate, while in the CISOLID substream, is soluble and so will contribute to the COD loading.

COD is a measure of the amount of oxygen required to convert all of the carbon in a specific compound to carbon dioxide. Any reasonable units (e.g., moles oxygen/moles component) may be used, but in this analysis, the units are kg oxygen/kg component. For example, the COD of glucose is 1.07 kg oxygen/kg compound and is calculated as follows:

$$C_6H_{12}O_6 + 6\ O_2 \quad = \quad 6\ CO_2 + 6\ H_2O$$

COD of glucose = (6 kgmol O_2*32 kg/kgmol)/(1 kgmol glucose*180 kg/kgmol)

COD of glucose = 1.07 kg oxygen/kg glucose

The COD values used for the components in the NREL process are summarized in Table 2.

Table 2
Component COD Factors

Component	COD Factor (kg COD/kg)
C-6 and C-5 Sugars and Oligomers	1.07
Cellobiose	1.07
Ethanol	2.09
Furfural	1.67
Lactic Acid, Acetic Acid	1.07
Glycerol	1.22
Succinic Acid	0.95
Xylitol	1.22
HMF	1.52
Soluble Solids	0.71
Soluble Unknown	1.07
Corn Oil	2.89
Acetate Oligomers	1.07
Acetate	1.07

As shown on the table, the COD for most components is slightly greater than unity. This approximation agrees well with practice; CODs of sugar-based streams generally range from 1 to 1.1 (kg COD/kg component) (Nagle 1998a). This method of approximation results in values that are similar to tests performed on SSCF effluent that had been stripped of ethanol (Pinnacle 1998; Evergreen Analytical 1998). The predicted COD using the factors in Table 2 and the composition (without ethanol) provided by McMillan (1998) is 28,398 mg/l. The average of 3 measured values (Pinnacle 1998; Evergreen Analytical 1998) is 27,199 mg/l. Comparison of a more detailed compositional analysis of the sample could not be completed due to possible contamination (McMillan 1998a). Attachment 4 contains the measured COD values as well as a spreadsheet showing the projected COD value.

In the initial model, the BOD is calculated as 70% of the COD for all waste streams. This approximation agrees well with published ranges for COD and BOD for similar wastewater

(Perry 1998). Data on SSCF effluent predict a lower BOD/COD ratio, with an average value of 52% for all technologies (Evergreen Analytical 1998). The wastewater in the model, however, will have a different composition than that analyzed. In addition, it is expected that this ratio will change through each treatment step. Based on the projected wastewater compositions and the treatment system, the estimated BOD/COD ratio is 0.50 for the influent to anaerobic digestion, 0.20 for the influent to aerobic treatment and 0.10 for the system effluent (Ruocco 1998). Since BOD is a laboratory test and cannot be specifically predicted, the ratios provided above are estimates based on experience with other wastewater systems. The FORTRAN blocks CODCALC1, CODCALC2 and CODEND in the ASPEN model should be updated with the new BOD/COD ratios.

The COD calculations outlined above correspond to the COD loadings for anaerobic digestion. In aerobic treatment, nitrogen-containing compounds such as ammonium acetate will have a significant oxygen demand (e.g., 4.43 kg O_2 required per kg of NH_3).

Since ammonia is not converted in anaerobic digestion, the contribution of the reduced nitrogen compounds is <u>not</u> included in the overall COD calculation. In aerobic treatment, however, these compounds cannot be ignored. This fact requires two significant changes to the model. The first is that reduced nitrogen compounds that are converted in anaerobic digestion (i.e., ammonium acetate and ammonium sulfate) must be treated differently in the ASPEN model. Currently, the carbon and sulfur portions of these compounds are converted to biogas and hydrogen sulfide, respectively, and the other portion is converted to water. This system incorrectly ignores the nitrogen in the effluent from anaerobic digestion. The second major change is in the FORTRAN block CODCALC2. The current COD values are the same as those listed above in Table 3. As discussed, these COD do not include the contribution of reduced nitrogen. This contribution must be accounted for in aerobic treatment.

To remedy this situation, the following specific changes should be made to the ASPEN model:

1. The reduced nitrogen compounds should be carried through the wastewater treatment system as their component ions. Thus, an RSTOIC block should be added prior to the anaerobic system. Here, ammonium acetate would be converted to ammonia and acetate and ammonium sulfate would be converted to ammonia and sulfuric acid.

2. The FORTRAN block CODCALC1 would then need to be modified such that the COD value for acetate was 1.07.

3. Within the anaerobic digestion subroutine, no significant changes would be required except that ammonium sulfate would no longer be converted to hydrogen sulfide and ammonium acetate would no longer be converted to methane, carbon dioxide and water. The new substances, acetate, sulfuric acid and ammonia are already correctly handled in the subroutine. That is, acetate is converted to biogas; sulfuric acid is converted to hydrogen sulfide and water; and ammonia is not changed.

4. As noted earlier, the FORTRAN block CODCALC2 must be modified so that all reduced nitrogen compounds are included in the COD calculation. Since all of these compounds are now noted as ammonia, a new COD factor of 4.43 should be added and applied to ammonia. Ammonium hydroxide will also have a COD demand of 2.15.

5. The FORTRAN block that calculates the air addition, AERAIR, should be modified so that there is no excess air.

6. The aerobic reactor should be modified so that the ammonia-containing compounds are converted to nitrates as follows:

$$NH_3 + 2.25\ O_2 = NO_3 + 1.5\ H_2O$$

A conversion efficiency of 98% should be used for this reaction.

7. Finally, the FORTRAN block POWER should be modified so that the work stream for the aerators is correct. Each kg of oxygen required uses 2 hp-hr of energy. This should be added to the FORTRAN block as well as an appropriate work stream. The current system comprised of a compressor with an associated work stream should be deleted and replaced as outlined above.If these changes are made, it is expected that the ASPEN model will correctly simulate the wastewater treatment system. Other strategies would also likely work, but this appears to be the most straightforward.

References

Evergreen Analytical. 1998. Analysis Report, Lab Sample Numbers: 98-1697-01, 98-1593-01, 98-1609, April 22, 23, 30.

McMillan, J. 1998. Composition of post SSCF liquors, Memorandum to R. Wooley, June 10.

McMillan, J. 1998a. Personal communication, August 28.

Nagle, N. 1998. Personal communication, August 31.

Nagle, N. 1998a. Personal communication, August 27.

Perry, R.H. and Green, D.W. 1998. Perry's Chemical Engineers' Handbook, 7th edition, McGraw-Hill, New York, pg. 25-62.

Pinnacle Biotechnologies International, Inc. 1998. "Characterization and Anaerobic Digestion Analysis of Ethanol Process Samples", July.

Ruocco, J. 1998. Personal communication and cost estimates.

Attachment 1
Model Changes, ASPEN Code
and ASPEN Block Flow Diagram

```
;*****************************************************************************
;*****************************************************************************
;**                        NREL PROTECTED INFORMATION                       **
;*****************************************************************************
;*****************************************************************************
; NREL Biomass to Ethanol Process
; NREL Protected Information
; Best Case Cofermentation (4_96a.INP)
;  Modified to include the NREL Biofuels Databank of Physical Properties
; Authors: Vicky Putsche, Bob Wooley, Mark Ruth, Kelly Ibsen
; Date: April 26, 1996
;
;  Changes
; P9808B.INP; 08/18/98 VLP
;  WWT Changes
; 1. Deleted ASHSEP and UNCONVT blocks and corresponding streams.
; 2. Deleted O2/N2 separator (M608) because it is not needed (J. Ruocco)
; 3. Changed the anaerobic and aerobic temperatures to be 35 and 21C,
;    respectively, based on information from J. Ruocco
; 4. Modified the conversions in the aerobic system, T608, to be
;    60% conversion to CO2 and H2O and 30% to cell mass.  Only soluble
;    components will be degraded.
; 5. Modified FORTRAN WWNUTR1 to be based on the COD loading to
;    anaerobic digestion.  It controls all chemical (base) and nutrient
;    addition (H3PO4, urea, micronutrients) to anaerobic digestion
; 6. Added the FORTRAN block WWNUTR2 to control polymer addition to
;    aerobic treatment based on the COD loading to the aerobic system.
; 7. Modified excel costing spreadsheet (W9806_) to include new costs
;    for anaerobic and aerobic treatment chemicals.
; 8. Deleted aerobic digestor feed cooler (H-606) and corresponding
;    heat stream QH606 since cooling to the aerobic system is not
;    required (J. Ruocco).  The lower process temperature in aerobic
;    treatment is due to ambient cooling only.
; 9. Added polymer addition stream 631 to S614, the belt press.
; 10. Added stream 631 to the sensitivity block.
; 11. Changed aerobic cell conversion to be based on a mass basis without
;     balancing atoms.
; 12. Replaced RYIELD anaerobic digester (T-606) with a user block.
; 13. Commented out agitation streams WT602 (Equalization Basin),
;     WT604 (Nutrient addition), WT606 (Anaerobic Digestion), WT608
;     (Aerobic Digestion) based on information from J. Ruocco
; 14. Added block NUTMIX to add nutrients to anaerobic digestion.  Also
;     added this to sequence 10
; 15. Changed stream reference for P-606 in PUMPS to 618 from 616 since
;     it was deleted.
; 16. Changed the stream reference in the massflow sensitivity block
;     from 616 to 618.
; 17. Added H2S as a component
; 18. Changed 531 destination from S-600 to the boiler M803MIX
; 19. Changed water recycle in WWT (627) from anaerobic digestion to
;     aerobic
; 20. Added WWTSIZ to calculate the vessel volumes for anaerobic
```

```
;     digestion and aerobic treatment.  Added the vessel volume
;     variables, ANVOL and AERVOL to the sensitivity study with labels of
;     ZZZNANA, and ZZZOAER


FLOWSHEET A600
;THIS SECTION MODELS THE WASTEWATER TREATMENT AREA.
    BLOCK DCOOL2   IN=525  OUT=600 QDCOOL2
    BLOCK S601     IN=600  OUT=602 601
    BLOCK T630     IN=602  OUT=603 610
    BLOCK FWMIX    IN=516 603 604  OUT=606
    BLOCK RWSPLT   IN=606  OUT=219 430 411
    BLOCK S600     IN=520 247 821 535 1044  OUT=612
    BLOCK H602     IN=612  OUT=613 QH602
    BLOCK NUTMIX   IN=613 630  OUT=632
    BLOCK T606     IN=632  OUT=613C
    BLOCK T606FLSH IN=613C  OUT=614 618
    BLOCK M606     IN=614  OUT=615 WM606
    BLOCK M608A    IN=626  OUT=619 WM608A
    BLOCK T608     IN=618 619  627 OUT=619A
    BLOCK T608FLSH IN=619A  OUT=620 621
    BLOCK T610     IN=621  OUT=625 624
    BLOCK S614     IN=625 631  OUT=627 623
    BLOCK MPOW6    IN=WS601 WC601 WC614 WS614 OUT=WMP6

;-------------------------------------------------------------
;    DIGESTION (WASTE WATER TREATMENT) BLOCKS - AREA 6000
;-----------------------------------------------------------
;
BLOCK T630 FSPLIT
    DESCRIPTION "RECYCLE WATER AND WWT LIQUID SEPARATOR"
    FRAC 610 .750
;
BLOCK RWSPLT FSPLIT
    DESCRIPTION "RECYCLE WATER SPLITTER"
    FRAC 219 0.8/430 .001
;THE FRACTIONS LISTED ARE ASSUMPTIONS.  THE ACTUAL VALUES ARE
;DETERMINED BY THE FORTRAN BLOCK RECYCLE.
;
BLOCK S600 MIXER
    DESCRIPTION "TANK T-603 TO MIX PROCESS WASTEWATER AND OTHER WASTES"
    PARAM PRES=2
;
BLOCK FWMIX MIXER
    DESCRIPTION "TANK T-630 FOR MIXING FRESH H2O AND RECYCLE H2O"
    PARAM NPHASE=1 PHASE=L
;
BLOCK S601 SEP2
    DESCRIPTION "BEER BOTTOMS CENTRIFUGE"
    PARAM PRES=3.20
;THE FRACTIONAL SPLITS ARE BASED ON THE PDU VENDOR TESTS
;THAT SHOWED AN OUTLET SOLIDS CONCENTRATION OF
;30% AND 98% RECOVERY OF INSOLUBLE SOLIDS.  SOLUBLE
;COMPONENTS ARE SPLIT SO THAT THE LIQUID FRACTION OF
;EACH STREAM HAS THE SAME COMPOSITION.
    FRAC STREAM=601 SUBSTREAM=MIXED COMPS=                 &
        H2O ETHANOL FURFURAL HMF  H2SO4 N2   CO2  O2  CH4  &
        NO  NO2  NH3  SOLSLDS  GLUCOSE XYLOSE GALACTOS     &
        MANNOSE ARABINOS UNKNOWN AACID LACID CNUTR WNUTR   &
        CSL OIL  DENAT GLUCOLIG CELLOB XYLOLIG MANOLIG     &
```

```
        GALAOLIG ARABOLIG ACETOLIG GLYCEROL SUCCACID       &
        XYLITOL                                            &
  FRACS=.10  .10     .10      .10  .10  .10  .10  .10  .10  &
        .10  .10  .10  .50      1.0     .10    .10          &
        .10      .10      .10     .10   .10   1.    .10     &
         1.  .10  .10  .10      .10     .10    .10          &
        .10      .10      .10      .10      .10             &
        .10
;ALL CNUTR & CSL SHOULD HAVE BEEN CONSUMED IN CELLULASE PRODUCTION &
;SO ANY REMAINING SHOULD GO OFF TO WWT SO THAT THE RECYCLE WILL BE
;CORRECT.  DENAT AND WNUTR SHOULD NOT BE IN THIS STREAM, BUT IF THEY
;ARE, THEY BEHAVE LIKE ANY LIQUID.
    FRAC STREAM=601 SUBSTREAM=CISOLID COMPS=CELLULOS XYLAN  &
        ARABINAN MANNAN GALACTAN LIGNIN BIOMASS CELLULAS    &
        ZYMO CASO4 CAH2O2 GYPSUM TAR ACETATE ASH            &
    FRACS=                                  .980     .980   &
        .980     .980   .980     .980   .50     .50         &
        0.50 0.980 0.980  0.980  .98 .980    0.98
;
BLOCK T610 SSPLIT
    DESCRIPTION "CLARIFIER"
    FRAC MIXED 625 0.1
    FRAC CISOLID 625 1.0
;
BLOCK S614 SSPLIT
    DESCRIPTION "DEWATERING BELT FILTER PRESS"
    FRAC MIXED 623 0.1
    FRAC CISOLID 623 1.0
;
BLOCK DCOOL2 HEATER
    DESCRIPTION "DUMMY COOLER / AMBIENT COOLING IN S601"
    PARAM TEMP=40. PRES=.0
;
BLOCK H602 HEATER
    DESCRIPTION "COOLER TO BRING WASTEWATER TO ANAEROBIC TEMP"
    PARAM TEMP=35.0 PRES=.0
;
BLOCK T608 RSTOIC
    DESCRIPTION "AEROBIC DIGESTOR"
    PARAM TEMP=21.1 PRES=1.0
    STOIC 1 MIXED O2 -6.0 / GLUCOLIG -1.0 / H2O 5.0 / CO2 6.0
    STOIC 2 MIXED O2 -12.0 / CELLOB -1.0 / H2O 11.0 / CO2 12.0
    STOIC 3 MIXED O2 -6.0 / GLUCOSE -1.0 / H2O 6.0 / CO2 6.0
    STOIC 4 MIXED O2 -6.0 / HMF -1.0 / H2O 3.0 / CO2 6.0
    STOIC 5 MIXED O2 -5.0 / XYLOLIG -1.0 / H2O 4.0 / CO2 5.0
    STOIC 6 MIXED O2 -5.0 / XYLOSE -1.0 / H2O 5.0 / CO2  5.0
    STOIC 7 MIXED O2 -5.0 / FURFURAL -1.0 / H2O 2.0 / CO2 5.0
    STOIC 8 MIXED O2 -6.0 / MANOLIG -1.0 / H2O 5.0 / CO2  6.0
    STOIC 9 MIXED O2 -6.0 / MANNOSE -1.0 / H2O 6.0 / CO2  6.0
    STOIC 10 MIXED O2 -6.0 / GALAOLIG -1.0 / H2O 5.0 / CO2 6.0
    STOIC 11 MIXED O2 -6.0 / GALACTOS -1.0 / H2O 6.0 / CO2 6.0
    STOIC 12 MIXED O2 -5.0 / ARABOLIG -1.0 / H2O 4.0 / CO2 5.0
    STOIC 13 MIXED O2 -5.0 / ARABINOS -1.0 / H2O 5.0 / CO2 5.0
    STOIC 15 MIXED O2 -2.0 / ACETOLIG -1.0 / H2O 2.0 / CO2 2.0
    STOIC 16 MIXED O2 -2.0 / AACID -1.0 / H2O 2.0 / CO2  2.0
    STOIC 17 MIXED O2 -3.0 / LACID -1.0 / H2O 3.0 / CO2  3.0
    STOIC 18 MIXED O2 -.50 / UNKNOWN -1.0 / H2O .50 / CO2 .50
    STOIC 19 MIXED O2 -1.27630 / SOLSLDS -1.0 / H2O .740 /
                    CO2 1.0 / SO2 .00130
    STOIC 20 MIXED O2 -3.0 / ETHANOL -1.0 / H2O 3.0 / CO2 2.0
```

```
    STOIC 21 MIXED O2 -3.50 / GLYCEROL -1.0 / H2O 4.0 /CO2 3.0
    STOIC 22 MIXED O2 -3.50 / SUCCACID -1.0 / H2O 3.0 /CO2 4.0
    STOIC 23 MIXED O2 -5.50 / XYLITOL -1.0 / H2O 6.0 / CO2 5.0
    STOIC 24 MIXED O2 -2.75 / CISOLID NH4ACET -1.0 /
                   MIXED H2O 3.5 / CO2 2.0 / N2 0.5
;
    STOIC 25 MIXED GLUCOSE -1 / CISOLID BIOMASS 7.75281869
    STOIC 26 MIXED MANNOSE -1 / CISOLID BIOMASS 7.75281869
    STOIC 27 MIXED GALACTOS -1 / CISOLID BIOMASS 7.75281869
    STOIC 28 MIXED XYLOSE -1.0 / CISOLID BIOMASS 6.46062489
    STOIC 29 MIXED ARABINOS -1.0 / CISOLID BIOMASS 6.46062489
    STOIC 30 MIXED XYLITOL -1.0 / CISOLID BIOMASS 6.54746538
    STOIC 31 MIXED SOLSLDS -1.0 / CISOLID BIOMASS 0.71367586
    STOIC 32 MIXED UNKNOWN -1.0 / CISOLID BIOMASS 0.64607109
    STOIC 33 MIXED GLUCOLIG -1.0 / CISOLID BIOMASS 6.97628887
    STOIC 34 MIXED GALAOLIG -1.0 / CISOLID BIOMASS 6.97628884
    STOIC 35 MIXED MANOLIG -1.0 / CISOLID BIOMASS 6.97628884
    STOIC 36 MIXED XYLOLIG -1.0 / CISOLID BIOMASS 5.68440485
    STOIC 37 MIXED CELLOB -1.0 / CISOLID BIOMASS 14.7275927
    STOIC 38 MIXED FURFURAL -1 / CISOLID BIOMASS 4.13116442
    STOIC 39 MIXED HMF -1.0 / CISOLID BIOMASS 5.4269558
    STOIC 40 MIXED AACID -1.0 / CISOLID BIOMASS 2.58197779
    STOIC 41 MIXED LACID -1.0 / CISOLID BIOMASS 3.87296669
    STOIC 42 MIXED SUCCACID -1.0 / CISOLID BIOMASS 5.07788966
    STOIC 43 MIXED GLYCEROL -1.0 / CISOLID BIOMASS 3.9590326
    STOIC 44 MIXED OIL -1.0 / CISOLID BIOMASS 12.155542
    STOIC 45 MIXED ETHANOL -1.0 / CISOLID BIOMASS 1.97951631
    STOIC 46 CISOLID NH4ACET -1.0 / CISOLID BIOMASS 3.317135
;
    CONV 1 MIXED GLUCOLIG 0.6
    CONV 2 MIXED CELLOB 0.6
    CONV 3 MIXED GLUCOSE 0.6
    CONV 4 MIXED HMF 0.6
    CONV 5 MIXED XYLOLIG 0.6
    CONV 6 MIXED XYLOSE 0.6
    CONV 7 MIXED FURFURAL 0.6
    CONV 8 MIXED MANOLIG 0.6
    CONV 9 MIXED MANNOSE 0.6
    CONV 10 MIXED GALAOLIG 0.6
    CONV 11 MIXED GALACTOS 0.6
    CONV 12 MIXED ARABOLIG 0.6
    CONV 13 MIXED ARABINOS 0.6
    CONV 15 MIXED ACETOLIG 0.6
    CONV 16 MIXED AACID 0.6
    CONV 17 MIXED LACID 0.6
    CONV 18 MIXED UNKNOWN 0.6
    CONV 19 MIXED SOLSLDS 0.6
    CONV 20 MIXED ETHANOL 0.6
    CONV 21 MIXED GLYCEROL 0.6
    CONV 22 MIXED SUCCACID 0.6
    CONV 23 MIXED XYLITOL 0.6
    CONV 24 CISOLID NH4ACET 0.6
;
    CONV 25 MIXED GLUCOSE 0.3
    CONV 26 MIXED MANNOSE 0.3
    CONV 27 MIXED GALACTOS 0.3
    CONV 28 MIXED XYLOSE 0.3
    CONV 29 MIXED ARABINOS 0.3
    CONV 30 MIXED XYLITOL 0.3
    CONV 31 MIXED SOLSLDS 0.3
```

```
    CONV 32 MIXED UNKNOWN 0.3
    CONV 33 MIXED GLUCOLIG 0.3
    CONV 34 MIXED GALAOLIG 0.3
    CONV 35 MIXED MANOLIG 0.3
    CONV 36 MIXED XYLOLIG 0.3
    CONV 37 MIXED CELLOB 0.3
    CONV 38 MIXED FURFURAL 0.3
    CONV 39 MIXED HMF 0.3
    CONV 40 MIXED AACID 0.3
    CONV 41 MIXED LACID 0.3
    CONV 42 MIXED SUCCACID 0.3
    CONV 43 MIXED GLYCEROL 0.3
    CONV 44 MIXED OIL 0.3
    CONV 45 MIXED ETHANOL 0.3
    CONV 46 CISOLID NH4ACET 0.3
;
BLOCK M606 COMPR
    DESCRIPTION "OFF-GAS BLOWER"
    PARAM TYPE=ISENTROPIC PRES=2.360
;
BLOCK M608A COMPR
    DESCRIPTION "AEROBIC WWT REACTOR AIR BLOWER"
    PARAM TYPE=ISENTROPIC PRES=2.360
;
BLOCK T606FLSH FLASH2
    DESCRIPTION "FLASH FOR ANAEROBIC DIGESTION"
    PARAM PRES=1.0 DUTY=.0
;
BLOCK NUTMIX MIXER
    DESCRIPTION "ADDS CHEMICALS AND NUTRIENTS TO ANAEROBIC DIGESTION"
;
BLOCK T608FLSH FLASH2
    DESCRIPTION "FLASH FOR AEROBIC TREATMENT"
    PARAM PRES=.0 DUTY=.0
;
BLOCK MPOW6 MIXER
```

```
    DESCRIPTION "AREA 6000 MISCELLANEOUS WORK SUMMER"
;
BLOCK T606 USER
    DESCRIPTION "Anaerobic Digester"
    SUBROUTINE USRANR
    PARAM NREAL=5
    REAL VALUE-LIST=0.9 1.0 0.03 0.75 1.0
    FLASH-SPECS 613C TP TEMP=95 <F> PRES=1
;
;-----------------------------------------------------------------
;                   DESIGN SPECS
;                   DIGESTER (AREA 6000)
;-----------------------------------------------------------------
;
DESIGN-SPEC CFUGE3S
; Varies the split of water and most of the mixed components
; to reach a specified solids fraction in 601.  Works with
; fortran block CFUGESLD to vary not only water but several
; components
;
    DEFINE SOLIDS STREAM-VAR STREAM=601 SUBSTREAM=CISOLID   &
                  VARIABLE=MASS-FLOW
    DEFINE TMIXED STREAM-VAR STREAM=601 SUBSTREAM=MIXED     &
                  VARIABLE=MASS-FLOW
F     RATIO = SOLIDS / (TMIXED+SOLIDS)
F     WRITE(NHISTORY,101)RATIO
F 101 FORMAT('  Cfuge 3 Design Spec',/,'  Fraction Solids',g12.5)
    SPEC  RATIO  TO 0.30
    TOL-SPEC 0.01
    VARY BLOCK-VAR BLOCK=S601 SENTENCE=FRAC VARIABLE=FRACS   &
                   ID1=MIXED ID2=601 ELEMENT=1
    LIMITS 0.05 0.40
;
DESIGN-SPEC CT-T610
    DEFINE SOL625 STREAM-VAR STREAM=625 SUBSTREAM=CISOLID &
                  VARIABLE=MASS-FLOW
    DEFINE WAT625 STREAM-VAR STREAM=625 SUBSTREAM=MIXED   &
                  VARIABLE=MASS-FLOW
;   The spec of 0.05 is just a guess -- MR 24 Apr 97
    SPEC"SOL625/(SOL625+WAT625)" TO "0.05"
    TOL-SPEC"0.001"
    VARY BLOCK-VAR BLOCK=T610 SENTENCE=FRAC VARIABLE=FRAC &
         ID1=MIXED ID2=625
    LIMITS "0.0" "1.0"
;
DESIGN-SPEC CT-S614
    DEFINE SOL623 STREAM-VAR STREAM=623 SUBSTREAM=CISOLID &
                  VARIABLE=MASS-FLOW
    DEFINE WAT623 STREAM-VAR STREAM=623 SUBSTREAM=MIXED   &
                  VARIABLE=MASS-FLOW
;   The spec of 0.30 is just a guess -- MR 24 Apr 97
    SPEC"SOL623/(SOL623+WAT623)" TO "0.3"
    TOL-SPEC"0.001"
    VARY BLOCK-VAR BLOCK=S614 SENTENCE=FRAC VARIABLE=FRAC &
         ID1=MIXED ID2=623
    LIMITS "0.0" "1.0"
;
;-------------------------------------------------------
;                DIGESTOR FORTRAN BLOCKS - AREA 6000
;-------------------------------------------------------
```

```
;
;  This FORTRAN Block works with the design-spec CFUGE3S to make
;  vary the splits of all of the following components the same
;  as water (F1).  Water split is being varied by CFUGE3S.  CSL Split
;  is not controlled by this block.
FORTRAN CFUGESLD
    DEFINE F1      BLOCK-VAR BLOCK=S601 SENTENCE=FRAC   &
                   VARIABLE=FRACS ID1=MIXED ID2=601 ELEMENT=1
    DEFINE F2      BLOCK-VAR BLOCK=S601 SENTENCE=FRAC   &
                   VARIABLE=FRACS ID1=MIXED ID2=601 ELEMENT=2
    DEFINE F3      BLOCK-VAR BLOCK=S601 SENTENCE=FRAC   &
                   VARIABLE=FRACS ID1=MIXED ID2=601 ELEMENT=3
    DEFINE F4      BLOCK-VAR BLOCK=S601 SENTENCE=FRAC   &
                   VARIABLE=FRACS ID1=MIXED ID2=601 ELEMENT=4
    DEFINE F5      BLOCK-VAR BLOCK=S601 SENTENCE=FRAC   &
                   VARIABLE=FRACS ID1=MIXED ID2=601 ELEMENT=5
    DEFINE F6      BLOCK-VAR BLOCK=S601 SENTENCE=FRAC   &
                   VARIABLE=FRACS ID1=MIXED ID2=601 ELEMENT=6
    DEFINE F7      BLOCK-VAR BLOCK=S601 SENTENCE=FRAC   &
                   VARIABLE=FRACS ID1=MIXED ID2=601 ELEMENT=7
    DEFINE F8      BLOCK-VAR BLOCK=S601 SENTENCE=FRAC   &
                   VARIABLE=FRACS ID1=MIXED ID2=601 ELEMENT=8
    DEFINE F9      BLOCK-VAR BLOCK=S601 SENTENCE=FRAC   &
                   VARIABLE=FRACS ID1=MIXED ID2=601 ELEMENT=9
    DEFINE F10     BLOCK-VAR BLOCK=S601 SENTENCE=FRAC   &
                   VARIABLE=FRACS ID1=MIXED ID2=601 ELEMENT=10
    DEFINE F11     BLOCK-VAR BLOCK=S601 SENTENCE=FRAC   &
                   VARIABLE=FRACS ID1=MIXED ID2=601 ELEMENT=11
    DEFINE F12     BLOCK-VAR BLOCK=S601 SENTENCE=FRAC   &
                   VARIABLE=FRACS ID1=MIXED ID2=601 ELEMENT=12
    DEFINE F15     BLOCK-VAR BLOCK=S601 SENTENCE=FRAC   &
                   VARIABLE=FRACS ID1=MIXED ID2=601 ELEMENT=15
    DEFINE F16     BLOCK-VAR BLOCK=S601 SENTENCE=FRAC   &
                   VARIABLE=FRACS ID1=MIXED ID2=601 ELEMENT=16
    DEFINE F17     BLOCK-VAR BLOCK=S601 SENTENCE=FRAC   &
                   VARIABLE=FRACS ID1=MIXED ID2=601 ELEMENT=17
    DEFINE F18     BLOCK-VAR BLOCK=S601 SENTENCE=FRAC   &
                   VARIABLE=FRACS ID1=MIXED ID2=601 ELEMENT=18
    DEFINE F19     BLOCK-VAR BLOCK=S601 SENTENCE=FRAC   &
                   VARIABLE=FRACS ID1=MIXED ID2=601 ELEMENT=19
    DEFINE F20     BLOCK-VAR BLOCK=S601 SENTENCE=FRAC   &
                   VARIABLE=FRACS ID1=MIXED ID2=601 ELEMENT=20
    DEFINE F21     BLOCK-VAR BLOCK=S601 SENTENCE=FRAC   &
                   VARIABLE=FRACS ID1=MIXED ID2=601 ELEMENT=21
    DEFINE F23     BLOCK-VAR BLOCK=S601 SENTENCE=FRAC   &
                   VARIABLE=FRACS ID1=MIXED ID2=601 ELEMENT=23
    DEFINE F25     BLOCK-VAR BLOCK=S601 SENTENCE=FRAC   &
                   VARIABLE=FRACS ID1=MIXED ID2=601 ELEMENT=25
    DEFINE F26     BLOCK-VAR BLOCK=S601 SENTENCE=FRAC   &
                   VARIABLE=FRACS ID1=MIXED ID2=601 ELEMENT=26
    DEFINE F27     BLOCK-VAR BLOCK=S601 SENTENCE=FRAC   &
                   VARIABLE=FRACS ID1=MIXED ID2=601 ELEMENT=27
    DEFINE F28     BLOCK-VAR BLOCK=S601 SENTENCE=FRAC   &
                   VARIABLE=FRACS ID1=MIXED ID2=601 ELEMENT=28
    DEFINE F29     BLOCK-VAR BLOCK=S601 SENTENCE=FRAC   &
                   VARIABLE=FRACS ID1=MIXED ID2=601 ELEMENT=29
    DEFINE F30     BLOCK-VAR BLOCK=S601 SENTENCE=FRAC   &
                   VARIABLE=FRACS ID1=MIXED ID2=601 ELEMENT=30
    DEFINE F31     BLOCK-VAR BLOCK=S601 SENTENCE=FRAC   &
                   VARIABLE=FRACS ID1=MIXED ID2=601 ELEMENT=31
```

```
    DEFINE F32     BLOCK-VAR BLOCK=S601 SENTENCE=FRAC   &
                   VARIABLE=FRACS ID1=MIXED ID2=601 ELEMENT=32
    DEFINE F33     BLOCK-VAR BLOCK=S601 SENTENCE=FRAC   &
                   VARIABLE=FRACS ID1=MIXED ID2=601 ELEMENT=33
    DEFINE F34     BLOCK-VAR BLOCK=S601 SENTENCE=FRAC   &
                   VARIABLE=FRACS ID1=MIXED ID2=601 ELEMENT=34

;
F     F2=F1
F     F3=F1
F     F4=F1
F     F5=F1
F     F6=F1
F     F7=F1
F     F8=F1
F     F9=F1
F     F10=F1
F     F11=F1
F     F12=F1
F     F15=F1
F     F16=F1
F     F17=F1
F     F18=F1
F     F19=F1
F     F20=F1
F     F21=F1
F     F23=F1
F     F25=F1
F     F26=F1
F     F27=F1
F     F28=F1
F     F29=F1
F     F30=F1
F     F31=F1
F     F32=F1
F     F33=F1
F     F34=F1
;
    EXECUTE BEFORE BLOCK S601
;
;
FORTRAN AERAIR
F       COMMON/ WWLOD2/ COD2, BOD2, CODDY2, BODDY2
    DEFINE AIR STREAM-VAR STREAM=626 SUBSTREAM=MIXED  &
        VARIABLE=MOLE-FLOW
C THE AIR REQUIREMENT IS 50% ABOVE  THEORETICAL (J. RUOCCO)
C
F      XO2 = 2.5*COD2
F      AIR=XO2/0.21
    EXECUTE BEFORE BLOCK T608
;
FORTRAN RECYCLE
; BLOCK TO CALCULATE THE AMOUNT OF RECYCLE NEEDED AND INCOMING
; FRESH WATER
;
; DEFINE VARIABLES FOR FRESH WATER AND PROCESS RECYCLE WATER
     DEFINE FWAT STREAM-VAR STREAM=604 SUBSTREAM=MIXED VARIABLE=MASS-FLOW
     DEFINE RWAT STREAM-VAR STREAM=603 SUBSTREAM=MIXED VARIABLE=MASS-FLOW
;     DEFINE RWT2 STREAM-VAR STREAM=534 SUBSTREAM=MIXED VARIABLE=MASS-FLOW
     DEFINE RWT3 STREAM-VAR STREAM=516 SUBSTREAM=MIXED VARIABLE=MASS-FLOW
```

```
;;
;; DEFINE VARIABLES FOR RECYCLE WATER STREAM #1.  THIS STREAM
;; CONTROLS THE SOLIDS CONCENTRATION IN THE IMPREGNATOR.
;;
;     DEFINE CI1 STREAM-VAR STREAM=214A SUBSTREAM=CISOLID              &
;                VARIABLE=MASS-FLOW
;     DEFINE STV1 STREAM-VAR STREAM=215 SUBSTREAM=MIXED                &
;                 VARIABLE=MASS-FLOW
;     DEFINE STV2 STREAM-VAR STREAM=216 SUBSTREAM=MIXED                &
;                 VARIABLE=MASS-FLOW
;     DEFINE ACV1 STREAM-VAR STREAM=212 SUBSTREAM=MIXED                &
;                 VARIABLE=MASS-FLOW
;     DEFINE FDV1 STREAM-VAR STREAM=101 SUBSTREAM=MIXED                &
;                 VARIABLE=MASS-FLOW
;     DEFINE RI1 STREAM-VAR STREAM=211 SUBSTREAM=CISOLID               &
;                VARIABLE=MASS-FLOW
;
; DEFINE VARIABLES FOR RECYCLE WATER STREAM #2 (Stream. 219).  THIS
; STREAM CONTROLS THE SOLIDS CONCENTRATION to fermentation
;
    DEFINE RV2 STREAM-VAR STREAM=219 SUBSTREAM=MIXED                 &
               VARIABLE=MASS-FLOW
    DEFINE RI2 STREAM-VAR STREAM=219 SUBSTREAM=CISOLID               &
               VARIABLE=MASS-FLOW
    DEFINE RGLU MASS-FLOW STREAM=219 SUBSTREAM=MIXED                 &
                COMPONENT=GLUCOSE
    DEFINE RXYE MASS-FLOW STREAM=219 SUBSTREAM=MIXED                 &
                COMPONENT=XYLOSE
    DEFINE RSSL MASS-FLOW STREAM=219 SUBSTREAM=MIXED                 &
                COMPONENT=SOLSLDS
    DEFINE RARS MASS-FLOW STREAM=219 SUBSTREAM=MIXED                 &
                COMPONENT=ARABINOS
    DEFINE RGAS MASS-FLOW STREAM=219 SUBSTREAM=MIXED                 &
                COMPONENT=GALACTOS
    DEFINE RMAS MASS-FLOW STREAM=219 SUBSTREAM=MIXED                 &
                COMPONENT=MANNOSE
    DEFINE RCSL MASS-FLOW STREAM=219 SUBSTREAM=MIXED                 &
                COMPONENT=CSL
    DEFINE RCNT MASS-FLOW STREAM=219 SUBSTREAM=MIXED                 &
                COMPONENT=CNUTR
    DEFINE RWNT MASS-FLOW STREAM=219 SUBSTREAM=MIXED                 &
                COMPONENT=WNUTR
    DEFINE RGLO MASS-FLOW STREAM=219 SUBSTREAM=MIXED                 &
                COMPONENT=GLUCOLIG
    DEFINE RCLB MASS-FLOW STREAM=219 SUBSTREAM=MIXED                 &
                COMPONENT=CELLOB
    DEFINE RXYO MASS-FLOW STREAM=219 SUBSTREAM=MIXED                 &
                COMPONENT=XYLOLIG
    DEFINE RMAO MASS-FLOW STREAM=219 SUBSTREAM=MIXED                 &
                COMPONENT=MANOLIG
    DEFINE RGAO MASS-FLOW STREAM=219 SUBSTREAM=MIXED                 &
                COMPONENT=GALAOLIG
    DEFINE RARO MASS-FLOW STREAM=219 SUBSTREAM=MIXED                 &
                COMPONENT=ARABOLIG
    DEFINE RACO MASS-FLOW STREAM=219 SUBSTREAM=MIXED                 &
                COMPONENT=ACETOLIG
;
; DEFINE THE COMPONENTS OF STREAM 232 (Diluted Hydrolysate)
;
    DEFINE HF1 STREAM-VAR STREAM=232 SUBSTREAM=MIXED                 &
```

```
                VARIABLE=MASS-FLOW
     DEFINE HS1 STREAM-VAR STREAM=232 SUBSTREAM=CISOLID                &
                VARIABLE=MASS-FLOW
     DEFINE HGLU MASS-FLOW STREAM=232 SUBSTREAM=MIXED                   &
                 COMPONENT=GLUCOSE
     DEFINE HXYE MASS-FLOW STREAM=232 SUBSTREAM=MIXED                   &
                 COMPONENT=XYLOSE
     DEFINE HSSL MASS-FLOW STREAM=232 SUBSTREAM=MIXED                   &
                 COMPONENT=SOLSLDS
     DEFINE HARS MASS-FLOW STREAM=232 SUBSTREAM=MIXED                   &
                 COMPONENT=ARABINOS
     DEFINE HGAS MASS-FLOW STREAM=232 SUBSTREAM=MIXED                   &
                 COMPONENT=GALACTOS
     DEFINE HMAS MASS-FLOW STREAM=232 SUBSTREAM=MIXED                   &
                 COMPONENT=MANNOSE
     DEFINE HCSL MASS-FLOW STREAM=232 SUBSTREAM=MIXED                   &
                 COMPONENT=CSL
     DEFINE HCNT MASS-FLOW STREAM=232 SUBSTREAM=MIXED                   &
                 COMPONENT=CNUTR
     DEFINE HWNT MASS-FLOW STREAM=232 SUBSTREAM=MIXED                   &
                 COMPONENT=WNUTR
     DEFINE HGLO MASS-FLOW STREAM=232 SUBSTREAM=MIXED                   &
                 COMPONENT=GLUCOLIG
     DEFINE HCLB MASS-FLOW STREAM=232 SUBSTREAM=MIXED                   &
                 COMPONENT=CELLOB
     DEFINE HXYO MASS-FLOW STREAM=232 SUBSTREAM=MIXED                   &
                 COMPONENT=XYLOLIG
     DEFINE HMAO MASS-FLOW STREAM=232 SUBSTREAM=MIXED                   &
                 COMPONENT=MANOLIG
     DEFINE HGAO MASS-FLOW STREAM=232 SUBSTREAM=MIXED                   &
                 COMPONENT=GALAOLIG
     DEFINE HARO MASS-FLOW STREAM=232 SUBSTREAM=MIXED                   &
                 COMPONENT=ARABOLIG
     DEFINE HACO MASS-FLOW STREAM=232 SUBSTREAM=MIXED                   &
                 COMPONENT=ACETOLIG
;
; DEFINE THE COMPONENTS OF STREAM 401 (Feed to Cellulase Production)
;
;     DEFINE CFF1 STREAM-VAR STREAM=401 SUBSTREAM=MIXED                  &
;                 VARIABLE=MASS-FLOW
;     DEFINE CFS1 STREAM-VAR STREAM=401 SUBSTREAM=CISOLID                &
;                 VARIABLE=MASS-FLOW
;     DEFINE CFGLU MASS-FLOW STREAM=401 SUBSTREAM=MIXED                   &
;                  COMPONENT=GLUCOSE
;     DEFINE CFXYE MASS-FLOW STREAM=401 SUBSTREAM=MIXED                   &
;                  COMPONENT=XYLOSE
;     DEFINE CFSSL MASS-FLOW STREAM=401 SUBSTREAM=MIXED                   &
;                  COMPONENT=SOLSLDS
;     DEFINE CFARS MASS-FLOW STREAM=401 SUBSTREAM=MIXED                   &
;                  COMPONENT=ARABINOS
;     DEFINE CFGAS MASS-FLOW STREAM=401 SUBSTREAM=MIXED                   &
;                  COMPONENT=GALACTOS
;     DEFINE CFMAS MASS-FLOW STREAM=401 SUBSTREAM=MIXED                   &
;                  COMPONENT=MANNOSE
;     DEFINE CFCSL MASS-FLOW STREAM=401 SUBSTREAM=MIXED                   &
;                  COMPONENT=CSL
;     DEFINE CFCNT MASS-FLOW STREAM=401 SUBSTREAM=MIXED                   &
;                  COMPONENT=CNUTR
;     DEFINE CFWNT MASS-FLOW STREAM=401 SUBSTREAM=MIXED                   &
;                  COMPONENT=WNUTR
```

```
;     DEFINE CFGLO MASS-FLOW STREAM=401 SUBSTREAM=MIXED                  &
;                  COMPONENT=GLUCOLIG
;     DEFINE CFCLB MASS-FLOW STREAM=401 SUBSTREAM=MIXED                  &
;                  COMPONENT=CELLOB
;     DEFINE CFXYO MASS-FLOW STREAM=401 SUBSTREAM=MIXED                  &
;                  COMPONENT=XYLOLIG
;     DEFINE CFMAO MASS-FLOW STREAM=401 SUBSTREAM=MIXED                  &
;                  COMPONENT=MANOLIG
;     DEFINE CFGAO MASS-FLOW STREAM=401 SUBSTREAM=MIXED                  &
;                  COMPONENT=GALAOLIG
;     DEFINE CFARO MASS-FLOW STREAM=401 SUBSTREAM=MIXED                  &
;                  COMPONENT=ARABOLIG
;     DEFINE CFACO MASS-FLOW STREAM=401 SUBSTREAM=MIXED                  &
;                  COMPONENT=ACETOLIG
;
; DEFINE THE COMPONENTS OF STREAM 422 (Cellulase to SSCF Production)
;
    DEFINE CPF1 STREAM-VAR STREAM=422 SUBSTREAM=MIXED                  &
                VARIABLE=MASS-FLOW
    DEFINE CPS1 STREAM-VAR STREAM=422 SUBSTREAM=CISOLID                &
                VARIABLE=MASS-FLOW
    DEFINE CPGLU MASS-FLOW STREAM=422 SUBSTREAM=MIXED                   &
                 COMPONENT=GLUCOSE
    DEFINE CPXYE MASS-FLOW STREAM=422 SUBSTREAM=MIXED                   &
                 COMPONENT=XYLOSE
    DEFINE CPSSL MASS-FLOW STREAM=422 SUBSTREAM=MIXED                   &
                 COMPONENT=SOLSLDS
    DEFINE CPARS MASS-FLOW STREAM=422 SUBSTREAM=MIXED                   &
                 COMPONENT=ARABINOS
    DEFINE CPGAS MASS-FLOW STREAM=422 SUBSTREAM=MIXED                   &
                 COMPONENT=GALACTOS
    DEFINE CPMAS MASS-FLOW STREAM=422 SUBSTREAM=MIXED                   &
                 COMPONENT=MANNOSE
    DEFINE CPCSL MASS-FLOW STREAM=422 SUBSTREAM=MIXED                   &
                 COMPONENT=CSL
    DEFINE CPCNT MASS-FLOW STREAM=422 SUBSTREAM=MIXED                   &
                 COMPONENT=CNUTR
    DEFINE CPWNT MASS-FLOW STREAM=422 SUBSTREAM=MIXED                   &
                 COMPONENT=WNUTR
    DEFINE CPGLO MASS-FLOW STREAM=422 SUBSTREAM=MIXED                   &
                 COMPONENT=GLUCOLIG
    DEFINE CPCLB MASS-FLOW STREAM=422 SUBSTREAM=MIXED                   &
                 COMPONENT=CELLOB
    DEFINE CPXYO MASS-FLOW STREAM=422 SUBSTREAM=MIXED                   &
                 COMPONENT=XYLOLIG
    DEFINE CPMAO MASS-FLOW STREAM=422 SUBSTREAM=MIXED                   &
                 COMPONENT=MANOLIG
    DEFINE CPGAO MASS-FLOW STREAM=422 SUBSTREAM=MIXED                   &
                 COMPONENT=GALAOLIG
    DEFINE CPARO MASS-FLOW STREAM=422 SUBSTREAM=MIXED                   &
                 COMPONENT=ARABOLIG
    DEFINE CPACO MASS-FLOW STREAM=422 SUBSTREAM=MIXED                   &
                 COMPONENT=ACETOLIG
;
; DEFINE THE COMPONENTS OF STREAM 311 (CSL to SSCF Production)
;
    DEFINE CLF1 STREAM-VAR STREAM=311 SUBSTREAM=MIXED                  &
                VARIABLE=MASS-FLOW
    DEFINE CLS1 STREAM-VAR STREAM=311 SUBSTREAM=CISOLID                &
                VARIABLE=MASS-FLOW
```

```
     DEFINE CLGLU MASS-FLOW STREAM=311 SUBSTREAM=MIXED                  &
                  COMPONENT=GLUCOSE
     DEFINE CLXYE MASS-FLOW STREAM=311 SUBSTREAM=MIXED                  &
                  COMPONENT=XYLOSE
     DEFINE CLSSL MASS-FLOW STREAM=311 SUBSTREAM=MIXED                  &
                  COMPONENT=SOLSLDS
     DEFINE CLARS MASS-FLOW STREAM=311 SUBSTREAM=MIXED                  &
                  COMPONENT=ARABINOS
     DEFINE CLGAS MASS-FLOW STREAM=311 SUBSTREAM=MIXED                  &
                  COMPONENT=GALACTOS
     DEFINE CLMAS MASS-FLOW STREAM=311 SUBSTREAM=MIXED                  &
                  COMPONENT=MANNOSE
     DEFINE CLCSL MASS-FLOW STREAM=311 SUBSTREAM=MIXED                  &
                  COMPONENT=CSL
     DEFINE CLCNT MASS-FLOW STREAM=311 SUBSTREAM=MIXED                  &
                  COMPONENT=CNUTR
     DEFINE CLWNT MASS-FLOW STREAM=311 SUBSTREAM=MIXED                  &
                  COMPONENT=WNUTR
     DEFINE CLGLO MASS-FLOW STREAM=311 SUBSTREAM=MIXED                  &
                  COMPONENT=GLUCOLIG
     DEFINE CLCLB MASS-FLOW STREAM=311 SUBSTREAM=MIXED                  &
                  COMPONENT=CELLOB
     DEFINE CLXYO MASS-FLOW STREAM=311 SUBSTREAM=MIXED                  &
                  COMPONENT=XYLOLIG
     DEFINE CLMAO MASS-FLOW STREAM=311 SUBSTREAM=MIXED                  &
                  COMPONENT=MANOLIG
     DEFINE CLGAO MASS-FLOW STREAM=311 SUBSTREAM=MIXED                  &
                  COMPONENT=GALAOLIG
     DEFINE CLARO MASS-FLOW STREAM=311 SUBSTREAM=MIXED                  &
                  COMPONENT=ARABOLIG
     DEFINE CLACO MASS-FLOW STREAM=311 SUBSTREAM=MIXED                  &
                  COMPONENT=ACETOLIG
;
; DEFINE THE COMPONENTS OF STREAM 303 (Feed to SSCF Seed)
;
     DEFINE SFF1 STREAM-VAR STREAM=303 SUBSTREAM=MIXED                 &
                 VARIABLE=MASS-FLOW
     DEFINE SFS1 STREAM-VAR STREAM=303 SUBSTREAM=CISOLID               &
                 VARIABLE=MASS-FLOW
     DEFINE SFGLU MASS-FLOW STREAM=303 SUBSTREAM=MIXED                  &
                  COMPONENT=GLUCOSE
     DEFINE SFXYE MASS-FLOW STREAM=303 SUBSTREAM=MIXED                  &
                  COMPONENT=XYLOSE
     DEFINE SFSSL MASS-FLOW STREAM=303 SUBSTREAM=MIXED                  &
                  COMPONENT=SOLSLDS
     DEFINE SFARS MASS-FLOW STREAM=303 SUBSTREAM=MIXED                  &
                  COMPONENT=ARABINOS
     DEFINE SFGAS MASS-FLOW STREAM=303 SUBSTREAM=MIXED                  &
                  COMPONENT=GALACTOS
     DEFINE SFMAS MASS-FLOW STREAM=303 SUBSTREAM=MIXED                  &
                  COMPONENT=MANNOSE
     DEFINE SFCSL MASS-FLOW STREAM=303 SUBSTREAM=MIXED                  &
                  COMPONENT=CSL
     DEFINE SFCNT MASS-FLOW STREAM=303 SUBSTREAM=MIXED                  &
                  COMPONENT=CNUTR
     DEFINE SFWNT MASS-FLOW STREAM=303 SUBSTREAM=MIXED                  &
                  COMPONENT=WNUTR
     DEFINE SFGLO MASS-FLOW STREAM=303 SUBSTREAM=MIXED                  &
                  COMPONENT=GLUCOLIG
     DEFINE SFCLB MASS-FLOW STREAM=303 SUBSTREAM=MIXED                  &
```

```
                 COMPONENT=CELLOB
     DEFINE SFXYO MASS-FLOW STREAM=303 SUBSTREAM=MIXED                  &
                 COMPONENT=XYLOLIG
     DEFINE SFMAO MASS-FLOW STREAM=303 SUBSTREAM=MIXED                  &
                 COMPONENT=MANOLIG
     DEFINE SFGAO MASS-FLOW STREAM=303 SUBSTREAM=MIXED                  &
                 COMPONENT=GALAOLIG
     DEFINE SFARO MASS-FLOW STREAM=303 SUBSTREAM=MIXED                  &
                 COMPONENT=ARABOLIG
     DEFINE SFACO MASS-FLOW STREAM=303 SUBSTREAM=MIXED                  &
                 COMPONENT=ACETOLIG
;
; DEFINE THE COMPONENTS OF STREAM 304 (SSCF Seed to Production)
;
     DEFINE SPF1 STREAM-VAR STREAM=304 SUBSTREAM=MIXED                 &
                 VARIABLE=MASS-FLOW
     DEFINE SPS1 STREAM-VAR STREAM=304 SUBSTREAM=CISOLID               &
                 VARIABLE=MASS-FLOW
     DEFINE SPGLU MASS-FLOW STREAM=304 SUBSTREAM=MIXED                  &
                 COMPONENT=GLUCOSE
     DEFINE SPXYE MASS-FLOW STREAM=304 SUBSTREAM=MIXED                  &
                 COMPONENT=XYLOSE
     DEFINE SPSSL MASS-FLOW STREAM=304 SUBSTREAM=MIXED                  &
                 COMPONENT=SOLSLDS
     DEFINE SPARS MASS-FLOW STREAM=304 SUBSTREAM=MIXED                  &
                 COMPONENT=ARABINOS
     DEFINE SPGAS MASS-FLOW STREAM=304 SUBSTREAM=MIXED                  &
                 COMPONENT=GALACTOS
     DEFINE SPMAS MASS-FLOW STREAM=304 SUBSTREAM=MIXED                  &
                 COMPONENT=MANNOSE
     DEFINE SPCSL MASS-FLOW STREAM=304 SUBSTREAM=MIXED                  &
                 COMPONENT=CSL
     DEFINE SPCNT MASS-FLOW STREAM=304 SUBSTREAM=MIXED                  &
                 COMPONENT=CNUTR
     DEFINE SPWNT MASS-FLOW STREAM=304 SUBSTREAM=MIXED                  &
                 COMPONENT=WNUTR
     DEFINE SPGLO MASS-FLOW STREAM=304 SUBSTREAM=MIXED                  &
                 COMPONENT=GLUCOLIG
     DEFINE SPCLB MASS-FLOW STREAM=304 SUBSTREAM=MIXED                  &
                 COMPONENT=CELLOB
     DEFINE SPXYO MASS-FLOW STREAM=304 SUBSTREAM=MIXED                  &
                 COMPONENT=XYLOLIG
     DEFINE SPMAO MASS-FLOW STREAM=304 SUBSTREAM=MIXED                  &
                 COMPONENT=MANOLIG
     DEFINE SPGAO MASS-FLOW STREAM=304 SUBSTREAM=MIXED                  &
                 COMPONENT=GALAOLIG
     DEFINE SPARO MASS-FLOW STREAM=304 SUBSTREAM=MIXED                  &
                 COMPONENT=ARABOLIG
     DEFINE SPACO MASS-FLOW STREAM=304 SUBSTREAM=MIXED                  &
                 COMPONENT=ACETOLIG

; DEFINE VARIABLES FOR RECYCLE WATER STREAM #3.  THIS STREAM
; CONTROLS THE XYLOSE AND CELLULOSE CONCENTRATIONS IN 431.
; CURRENTLY, THIS IS SET TO 1%.
;
     DEFINE CV3 STREAM-VAR STREAM=403 SUBSTREAM=MIXED                 &
                VARIABLE=MASS-FLOW
     DEFINE CI3 STREAM-VAR STREAM=403 SUBSTREAM=CISOLID               &
                VARIABLE=MASS-FLOW
     DEFINE RI3 STREAM-VAR STREAM=430 SUBSTREAM=CISOLID               &
```

```
                VARIABLE=MASS-FLOW
     DEFINE ST3X MASS-FLOW STREAM=403 SUBSTREAM=MIXED                  &
                 COMPONENT=XYLOSE
     DEFINE ST3C MASS-FLOW STREAM=403 SUBSTREAM=CISOLID                &
                 COMPONENT=CELLULOSE
     DEFINE R3X MASS-FLOW STREAM=430 SUBSTREAM=MIXED                   &
                COMPONENT=XYLOSE
     DEFINE R3C MASS-FLOW STREAM=430 SUBSTREAM=CISOLID                 &
                COMPONENT=CELLULOSE
;
; DEFINE VARIABLES FOR RECYCLE WATER STREAM #4.  THIS STREAM
; CONTROLS THE CELLULOSE CONCENTRATION IN 412A.
; CURRENTLY, THIS IS SET TO 4%.
;
     DEFINE CV4 STREAM-VAR STREAM=410 SUBSTREAM=MIXED                  &
                VARIABLE=MASS-FLOW
     DEFINE CI4 STREAM-VAR STREAM=410 SUBSTREAM=CISOLID                &
                VARIABLE=MASS-FLOW
     DEFINE RI4 STREAM-VAR STREAM=411 SUBSTREAM=CISOLID                &
                VARIABLE=MASS-FLOW
     DEFINE ST4C MASS-FLOW STREAM=410 SUBSTREAM=CISOLID                &
                 COMPONENT=CELLULOSE
     DEFINE R4C MASS-FLOW STREAM=411 SUBSTREAM=CISOLID                 &
                COMPONENT=CELLULOSE
;
; DEFINE SPLIT VARIABLES IN THE RECYCLE WATER SPLITTER.
;
;     DEFINE F1 BLOCK-VAR BLOCK=RWSPLT SENT=FRAC &
;               VARIABLE=FRAC ID1=211
     DEFINE F2 BLOCK-VAR BLOCK=RWSPLT SENT=FRAC &
               VARIABLE=FRAC ID1=219
     DEFINE F3 BLOCK-VAR BLOCK=RWSPLT SENT=FRAC &
               VARIABLE=FRAC ID1=430

;
; DEFINE THE COMPONENTS OF STREAM 220 (Out of Pre Hydrolysis
;
     DEFINE HP1 STREAM-VAR STREAM=220 SUBSTREAM=MIXED                  &
                VARIABLE=MASS-FLOW
     DEFINE HPS1 STREAM-VAR STREAM=220 SUBSTREAM=CISOLID                &
                 VARIABLE=MASS-FLOW
;
;FORTRAN STATEMENTS
C  CSLCONC is the solids concentration of CSL
c     CSLCONC=0.5
;c
;c  CONC1: Solids Concentration in Impregnator Feed, Stream 214A
;c
;F     CONC1 = 0.3091
;F     CV1 = ((1.-CONC1)/CONC1) * CI1 - STV1 - STV2
;;c
;c  AV1 Recycle water flow (Stream 211)
;c
;F     AV1 = CV1 - (ACV1 + FDV1)
;c
c  AV2:   Recycle water flow (Stream 219)
c  CONC2: Total Solids Conc going to Fermentation (Stream 232)
c         (Includes sugars + solslds)
C  SLD232:  Total Solids in Stream 232
C  SLD219:  Total Solids in Stream 219
```

```
C  TTL232:  Total Flow in Stream 232
C  TTL219:  Total Flow in Stream 219
C  CNC219:  Total Solids Conc in Stream 219
C  OTHSLD:  Total Other Solids
C  OTHTTL:  Total Other Flow
c
c  CONC2 is the desired SSCF effective solids concentration
F     CONC2 = 0.2
c  OLG calcs are the oligomer flows in each stream
c  SLD calcs are the total solids in each stream
F     OLG232 = HGLO + HCLB + HXYO + HMAO + HGAO + HARO + HACO
F     SLD232 = HS1 + HGLU + HXYE + HSSL + HARS + HGAS + HMAS +
F    1         (HCSL*CSLCONC) + HCNT + HWNT + OLG232
F     OLG219 = RGLO + RCLB + RXYO + RMAO + RGAO + RARO + RACO
F     SLD219 = RI2 + RGLU + RXYE + RSSL + RARS + RGAS + RMAS +
F    1         (RCLS*CSLCONC) + RCNT + RWNT + OLG219
F     OLG401 = CFGLO + CFCLB + CFXYO + CFMAO + CFGAO + CFARO + CFACO
F     SLD401 = CFI2 + CFGLU + CFXYE + CFSSL + CFARS + CFGAS + CFMAS +
F    1         (CFCLS*CSLCONC) + CFCNT + CFWNT + OLG401
F     OLG422 = CPGLO + CPCLB + CPXYO + CPMAO + CPGAO + CPARO + CPACO
F     SLD422 = CPI2 + CPGLU + CPXYE + CPSSL + CPARS + CPGAS + CPMAS +
F    1         (CPCLS*CSLCONC) + CPCNT + CPWNT + OLG422
F     OLG311 = CLGLO + CLCLB + CLXYO + CLMAO + CLGAO + CLARO + CLACO
F     SLD311 = CLI2 + CLGLU + CLXYE + CLSSL + CLARS + CLGAS + CLMAS +
F    1         (CLCLS*CSLCONC) + CLCNT + CLWNT + OLG311
F     OLG303 = SFGLO + SFCLB + SFXYO + SFMAO + SFGAO + SFARO + SFACO
F     SLD303 = SFI2 + SFGLU + SFXYE + SFSSL + SFARS + SFGAS + SFMAS +
F    1         (SFCLS*CSLCONC) + SFCNT + SFWNT + OLG303
F     OLG304 = SPGLO + SPCLB + SPXYO + SPMAO + SPGAO + SPARO + SPACO
F     SLD304 = SPI2 + SPGLU + SPXYE + SPSSL + SPARS + SPGAS + SPMAS +
F    1         (SPCLS*CSLCONC) + SPCNT + SPWNT + OLG304
c  TTL calc are the total flows of each stream
F     TTL232 = HF1 + HS1
F     TTL219 = RV2 + RI2
F     TTL401 = CFF1 + CFS1
F     TTL422 = CPF1 + CPS1
F     TTL311 = CLF1 + CLS1
F     TTL303 = SFF1 + SFS1
F     TTL304 = SPF1 + SPS1
F     CNC219 = SLD219 / TTL219
;F     OTHSLD = SLD232 - SLD219 +SLD422+SLD311-SLD303+SLD304
F     OTHSLD = SLD232 - SLD219 - SLD401 + SLD422 + SLD311 - SLD303
F    1       + SLD304
;F     OTHTTL = TTL232 - TTL219 +TTL422+TTL311-TTL303+TTL304
F     OTHTTL = TTL232 - TTL219 - TTL401 + TTL422 + TTL311 - TTL303
F    1       + TTL304
F     CAL219 = ((CONC2 * OTHTTL) - OTHSLD) / (CNC219 - CONC2)
F     AV2 = CAL219 - RI2
c
c  CONC3: Cellulose + Xylose concentration in Stream 431
c  AV3: Recycle Flow Stream 430
c
F     CONC3 = 0.04
F     AV3 = ((ST3X + ST3C + R3X + R3C) / CONC3)
F    1    - (CI3 +  CV3 + RI3)
c
c  CONC4: Cellulose + Xyloxe in Stream 412A
c  AV4: Recycle Flow Stream 430
c
F     CONC4 = 0.04
```

```
F     AV4 = ((ST4C + R4C) / CONC4) -(CI4 + CV4 + RI4)
c
c  Recalc Concentrations and write to the history file
c
;F     CNC1a = CI1 / (CV1 + CI1 + STV1)
;F     CNC1  = CI1 / (CV1 + CI1 + STV1 + STV2)
;F     CNC1b = HPS1 / (HP1 + HPS1)
;F     CNC2  = (SLD232 +SLD422+SLD311-SLD303+SLD304)
;F    1      / (TTL232 +TTL422+TTL311-TTL303+TTL304)
;F     CNC2b = (RI2 +CPS1+CLS1-SFS1+SPS1)
;F    1      / (TTL232 +TTL422+TTL311-TTL303+TTL304)
F     CNC2  = (SLD232 - SLD401 + SLD422 + SLD311 - SLD303 + SLD304)
F    1      / (TTL232 - TTL401 + TTL422 + TTL311 - TTL303 + TTL304)
F     CNC2b = (RI2 - CFS1 + CPS1 + CLS1 - SFS1 + SPS1)
F    1      / (TTL232 - TTL401 + TTL422 + TTL311 - TTL303 + TTL304)
F     CNC3 = (ST3X + ST3C + R3X + R3C)
F    1     / (CI3 + CV3 + RI3 + AV3)
F     CNC4 = (ST4C + R4C) / (CI4 + CV4 + RI4 + AV4)
c
F     WRITE(NHSTRY,101)CNC2,CNC3,CNC4,CNC2b
F 101 FORMAT(' RECYCLE Fortran Block Results',/,
F    1       ' Specified Concentrations',/,
F    3       ' SSCF Effective Solids Conc:                 ',g12.5,/,
F    4       ' Cellulase Seed Feed Cellulose+Xylose (431): ',g12.5,/,
F    5       ' Cellulase Ferm Cellulose Conc (412A):       ',g12.5,/,/,
F    6       ' Other Concentrations',/,
F    5       ' SSCF Insoluble Solids Conc:                 ',g12.5)
c
c  Calculate Splits for Block RWSPLT
c
;F     F1=AV1/(AV1+AV2+AV3+AV4)
F     F2=AV2/(AV2+AV3+AV4)
F     F3=AV3/(AV2+AV3+AV4)
F     F4=1-F2-F3
c
c  Calculate Make-up Water, Stream 604
c
F     RWTAV = RWAT + RWT3
F     FWAT= AV2 + RI2 + AV3 + RI3 + AV4 + RI4 - RWTAV
      EXECUTE BEFORE FWMIX
;
FORTRAN RECCOND
;
; DEFINE VARIABLES FOR RECYCLE WATER STREAM #1.  THIS STREAM
; CONTROLS THE SOLIDS CONCENTRATION IN THE IMPREGNATOR.
;
     DEFINE CI1 STREAM-VAR STREAM=214A SUBSTREAM=CISOLID               &
                VARIABLE=MASS-FLOW
     DEFINE STV1 STREAM-VAR STREAM=215 SUBSTREAM=MIXED                 &
                 VARIABLE=MASS-FLOW
     DEFINE STV2 STREAM-VAR STREAM=216 SUBSTREAM=MIXED                 &
                 VARIABLE=MASS-FLOW
     DEFINE ACV1 STREAM-VAR STREAM=212 SUBSTREAM=MIXED                 &
                 VARIABLE=MASS-FLOW
     DEFINE FDV1 STREAM-VAR STREAM=101 SUBSTREAM=MIXED                 &
                 VARIABLE=MASS-FLOW
     DEFINE AV1  BLOCK-VAR BLOCK=E501SPT SENTENCE=MASS-FLOW           &
                  VARIABLE=FLOW ID1=211
c
c  CONC1: Solids Concentration in Impregnator Feed, Stream 214A
```

```
c
F     CONC1 = 0.3091
F     CV1 = ((1.-CONC1)/CONC1) * CI1 - STV1 - STV2
c
c  AV1 Recycle water flow (Stream 211)
c
F     AV1 = CV1 - (ACV1 + FDV1)
c
F     CNC1a = CI1 / (CV1 + CI1 + STV1)
F     CNC1  = CI1 / (CV1 + CI1 + STV1 + STV2)
    READ-VARS CI1 STV1 STV2 ACV1 FDV1
    WRITE-VARS AV1
;    EXECUTE BEFORE E501MIX
;
FORTRAN CODCALC1
C Calculates the incomming COD
F       COMMON/ WWLOAD/ CODTOT, BODTOT, CODDAY, BODDAY
    DEFINE GLUC MASS-FLOW STREAM=613 SUBSTREAM=MIXED  &
        COMPONENT=GLUCOSE
    DEFINE XYLO MASS-FLOW STREAM=613 SUBSTREAM=MIXED  &
        COMPONENT=XYLOSE
    DEFINE UNKN MASS-FLOW STREAM=613 SUBSTREAM=MIXED  &
        COMPONENT=UNKNOWN
    DEFINE SOLS MASS-FLOW STREAM=613 SUBSTREAM=MIXED  &
        COMPONENT=SOLSLDS
    DEFINE ARAB MASS-FLOW STREAM=613 SUBSTREAM=MIXED  &
        COMPONENT=ARABINOS
    DEFINE GALA MASS-FLOW STREAM=613 SUBSTREAM=MIXED  &
        COMPONENT=GALACTOS
    DEFINE XMANS MASS-FLOW STREAM=613 SUBSTREAM=MIXED  &
        COMPONENT=MANNOSE
    DEFINE GLUO MASS-FLOW STREAM=613 SUBSTREAM=MIXED  &
        COMPONENT=GLUCOLIG
    DEFINE CELB MASS-FLOW STREAM=613 SUBSTREAM=MIXED  &
        COMPONENT=CELLOB
    DEFINE XYLG MASS-FLOW STREAM=613 SUBSTREAM=MIXED  &
        COMPONENT=XYLOLIG
    DEFINE XMANO MASS-FLOW STREAM=613 SUBSTREAM=MIXED  &
        COMPONENT=MANOLIG
    DEFINE GALO MASS-FLOW STREAM=613 SUBSTREAM=MIXED  &
        COMPONENT=GALAOLIG
    DEFINE ARAO MASS-FLOW STREAM=613 SUBSTREAM=MIXED  &
        COMPONENT=ARABOLIG
    DEFINE ACEO MASS-FLOW STREAM=613 SUBSTREAM=MIXED  &
        COMPONENT=ACETOLIG
    DEFINE XYLL MASS-FLOW STREAM=613 SUBSTREAM=MIXED  &
        COMPONENT=XYLITOL
    DEFINE ETOH MASS-FLOW STREAM=613 SUBSTREAM=MIXED  &
        COMPONENT=ETHANOL
    DEFINE FURF MASS-FLOW STREAM=613 SUBSTREAM=MIXED  &
        COMPONENT=FURFURAL
    DEFINE XHMF MASS-FLOW STREAM=613 SUBSTREAM=MIXED  &
        COMPONENT=HMF
    DEFINE CH4 MASS-FLOW STREAM=613 SUBSTREAM=MIXED  &
        COMPONENT=CH4
    DEFINE XLACI MASS-FLOW STREAM=613 SUBSTREAM=MIXED  &
        COMPONENT=LACID
    DEFINE AACI MASS-FLOW STREAM=613 SUBSTREAM=MIXED  &
        COMPONENT=AACID
    DEFINE GLYC MASS-FLOW STREAM=613 SUBSTREAM=MIXED  &
```

```
        COMPONENT=GLYCEROL
    DEFINE SUCC MASS-FLOW STREAM=613 SUBSTREAM=MIXED  &
        COMPONENT=SUCCACID
    DEFINE DENA MASS-FLOW STREAM=613 SUBSTREAM=MIXED  &
        COMPONENT=DENAT
    DEFINE XOIL MASS-FLOW STREAM=613 SUBSTREAM=MIXED  &
        COMPONENT=OIL
    DEFINE XNNH4 MASS-FLOW STREAM=613 SUBSTREAM=CISOLID &
        COMPONENT=NH4ACET
C
C SET THE COD FOR COMPONENTS (KG O2/KG COMPONENT)
C THE COD VALUES ARE THE THEORETICAL O2 REQUIRED FOR COMBUSTION, BUT
C ONLY FOR SOLUBLE COMPONENTS.  INSOLUBLE COMPONENTS ARE ASSUMED TO
C BE NON-REACTIVE AND ARE NOT CONTAINED IN THE CALCULATION.
C
C  SOLUBLE C-CONTAINING COMPOUNDS
F      CGLUC = 1.07
F      CXYLO = 1.07
F      CUNKN = 1.07
F      CSOLS = 0.71
F      CETOH = 2.09
F      CARAB = 1.07
F      CGALA = 1.07
F      CMANS = 1.07
F      CGLUO = 1.07
F      CCELB = 1.07
F      CXYLG = 1.07
F      CMANO = 1.07
F      CGALO = 1.07
F      CARAO = 1.07
F      CXYLL = 1.22
F      CFURF = 1.67
F      CHMF  = 1.52
F      CCH4  = 4.0
F      CLACI = 1.07
F      CAACI = 1.07
F      CGLYC = 1.22
F      CSUCC = 0.95
F      CDENA = 3.52
F      COIL  = 2.89
F      CACEO = 1.07
F      CNNH4 = 1.143
C
C
C  CALCULATE HOURLY COD LOADINGS (KG/HR)
C
F     CODTOT = GLUC*CGLUC + XYLO*CXYLO + UNKN*CUNKN + SOLS*CSOLS +
F    1         GALA*CGALA + XMANS*CMANS + ARAB*CARAB + GLUO*CGLUO +
F    2         CELB*CCELB + XYLG*CXYLG + XMANO*CMANO + GALO*CGALO +
F    3         ARAO*CARAO + XYLL*CXYLL + ETOH*CETOH + FURF*CFURF  +
F    4         XHMF*CHMF   + CH4*CCH4   + XACI*CLACI + AACI*CAACI +
F    5         GLYC*CGLYC + SUCC*CSUCC + DENA*CDENA + XOIL*COIL   +
F    6         ACEO*CACEO  + CNNH4*XNNH4
C
C
C  CALCULATE HOURLY BOD LOADINGS (KG/HR)
C
F      BODCOD = 0.70
C BODCOD IS THE BOD/COD RATIO AND WAS PROVIDED BY J. RUOCCO 7/29/98
C THIS VALUE IS WITHIN THE RANGE (0.45-0.78) PROVIDED IN PERRY'S
```

```
C 7TH EDITION, PG. 25-62.
C
F      BODTOT= BODCOD*CODTOT
C
C
C  CALCULATE DAILY BOD AND COD LOADINGS (LB/DAY)
C
F      CODDAY = CODTOT*2.205*24.
F      BODDAY = BODTOT*2.205*24.
C
C 2.205 IS LB/KG AND 24 HR/DAY TO CONVERT KG/HR TO LB/DAY
C
C    WRITE ANSWERS TO THE HISTORY FILE
C
F     WRITE(NHSTRY,*)'CODTOT, BODTOT= ',CODTOT, BODTOT
F     WRITE(NHSTRY,*)'CODDAY, BODDAY= ',CODDAY, BODDAY
C
    READ-VARS GLUC

FORTRAN CODCALC2
C Calculates COD after ANEROBIC and before AEROBIC
F       COMMON/ WWLOD2/ COD2, BOD2, CODDY2, BODDY2
    DEFINE GLUC MASS-FLOW STREAM=618 SUBSTREAM=MIXED  &
        COMPONENT=GLUCOSE
    DEFINE XYLO MASS-FLOW STREAM=618 SUBSTREAM=MIXED  &
        COMPONENT=XYLOSE
    DEFINE UNKN MASS-FLOW STREAM=618 SUBSTREAM=MIXED  &
        COMPONENT=UNKNOWN
    DEFINE SOLS MASS-FLOW STREAM=618 SUBSTREAM=MIXED  &
        COMPONENT=SOLSLDS
    DEFINE ARAB MASS-FLOW STREAM=618 SUBSTREAM=MIXED  &
        COMPONENT=ARABINOS
    DEFINE GALA MASS-FLOW STREAM=618 SUBSTREAM=MIXED  &
        COMPONENT=GALACTOS
    DEFINE XMANS MASS-FLOW STREAM=618 SUBSTREAM=MIXED  &
        COMPONENT=MANNOSE
    DEFINE GLUO MASS-FLOW STREAM=618 SUBSTREAM=MIXED  &
        COMPONENT=GLUCOLIG
    DEFINE CELB MASS-FLOW STREAM=618 SUBSTREAM=MIXED  &
        COMPONENT=CELLOB
    DEFINE XYLG MASS-FLOW STREAM=618 SUBSTREAM=MIXED  &
        COMPONENT=XYLOLIG
    DEFINE XMANO MASS-FLOW STREAM=618 SUBSTREAM=MIXED  &
        COMPONENT=MANOLIG
    DEFINE GALO MASS-FLOW STREAM=618 SUBSTREAM=MIXED  &
        COMPONENT=GALAOLIG
    DEFINE ARAO MASS-FLOW STREAM=618 SUBSTREAM=MIXED  &
        COMPONENT=ARABOLIG
    DEFINE ACEO MASS-FLOW STREAM=618 SUBSTREAM=MIXED  &
        COMPONENT=ACETOLIG
    DEFINE XYLL MASS-FLOW STREAM=618 SUBSTREAM=MIXED  &
        COMPONENT=XYLITOL
    DEFINE ETOH MASS-FLOW STREAM=618 SUBSTREAM=MIXED  &
        COMPONENT=ETHANOL
    DEFINE FURF MASS-FLOW STREAM=618 SUBSTREAM=MIXED  &
        COMPONENT=FURFURAL
    DEFINE XHMF MASS-FLOW STREAM=618 SUBSTREAM=MIXED  &
        COMPONENT=HMF
    DEFINE CH4 MASS-FLOW STREAM=618 SUBSTREAM=MIXED  &
        COMPONENT=CH4
```

```
    DEFINE XLACI MASS-FLOW STREAM=618 SUBSTREAM=MIXED  &
        COMPONENT=LACID
    DEFINE AACI MASS-FLOW STREAM=618 SUBSTREAM=MIXED  &
        COMPONENT=AACID
    DEFINE GLYC MASS-FLOW STREAM=618 SUBSTREAM=MIXED  &
        COMPONENT=GLYCEROL
    DEFINE SUCC MASS-FLOW STREAM=618 SUBSTREAM=MIXED  &
        COMPONENT=SUCCACID
    DEFINE DENA MASS-FLOW STREAM=618 SUBSTREAM=MIXED  &
COMPONENT=DENAT
    DEFINE XOIL MASS-FLOW STREAM=618 SUBSTREAM=MIXED  &
        COMPONENT=OIL
    DEFINE XNNH4 MASS-FLOW STREAM=618 SUBSTREAM=CISOLID &
        COMPONENT=NH4ACET
C
C SET THE COD FOR COMPONENTS (KG O2/KG COMPONENT)
C THE COD VALUES ARE THE THEORETICAL O2 REQUIRED FOR COMBUSTION, BUT
C ONLY FOR SOLUBLE COMPONENTS.  INSOLUBLE COMPONENTS ARE ASSUMED TO
C BE NON-REACTIVE AND ARE NOT CONTAINED IN THE CALCULATION.
C
C  SOLUBLE C-CONTAINING COMPOUNDS
F      CGLUC = 1.07
F      CXYLO = 1.07
F      CUNKN = 1.07
F      CSOLS = 0.71
F      CETOH = 2.09
F      CARAB = 1.07
F      CGALA = 1.07
F      CMANS = 1.07
F      CGLUO = 1.07
F      CCELB = 1.07
F      CXYLG = 1.07
F      CMANO = 1.07
F      CGALO = 1.07
F      CARAO = 1.07
F      CXYLL = 1.22
F      CFURF = 1.67
F      CHMF  = 1.52
F      CCH4  = 4.0
F      CLACI = 1.07
F      CAACI = 1.07
F      CGLYC = 1.22
F      CSUCC = 0.95
F      CDENA = 3.52
F      COIL  = 2.89
F      CACEO = 1.07
F      CNNH4 = 1.143
C
C
C  CALCULATE HOURLY COD LOADINGS (KG/HR)
C
F     COD2   = GLUC*CGLUC + XYLO*CXYLO + UNKN*CUNKN + SOLS*CSOLS +
F    1         GALA*CGALA + XMANS*CMANS + ARAB*CARAB + GLUO*CGLUO +
F    2         CELB*CCELB + XYLG*CXYLG + XMANO*CMANO + GALO*CGALO +
F    3         ARAO*CARAO + XYLL*CXYLL + ETOH*CETOH + FURF*CFURF +
F    4         XHMF*CHMF   + CH4*CCH4   + XLACI*CLACI + AACI*CAACI +
F    5         GLYC*CGLYC + SUCC*CSUCC + DENA*CDENA + XOIL*COIL   +
F    6         ACEO*CACEO    + CNNH4*XNNH4
C
C
```

```
C  CALCULATE HOURLY BOD LOADINGS (KG/HR)
C
F      BODCOD = 0.70
C BODCOD IS THE BOD/COD RATIO AND WAS PROVIDED BY J. RUOCCO 7/29/98
C THIS VALUE IS WITHIN THE RANGE (0.45-0.78) PROVIDED IN PERRY'S
C 7TH EDITION, PG. 25-62.
C
F      BOD2 = BODCOD*COD2
C
C
C  CALCULATE DAILY BOD AND COD LOADINGS (LB/DAY)
C
F      CODDY2 = COD2*2.205*24.
F      BODDY2 = BOD2*2.205*24.
C
C 2.205 IS LB/KG AND 24 HR/DAY TO CONVERT KG/HR TO LB/DAY
C
C    WRITE ANSWERS TO THE HISTORY FILE
C
F     WRITE(NHSTRY,*)'COD2, BOD2= ',COD2, BOD2
F     WRITE(NHSTRY,*)'CODDY2, BODDY2= ',CODDY2, BODDY2
C
    READ-VARS GLUC

FORTRAN CODEND
C Calculates the final COD level in the waste water
F       COMMON/ WWLOD3/ COD3, BOD3, CODDY3, BODDY3
    DEFINE GLUC MASS-FLOW STREAM=624 SUBSTREAM=MIXED  &
        COMPONENT=GLUCOSE
    DEFINE XYLO MASS-FLOW STREAM=624 SUBSTREAM=MIXED  &
        COMPONENT=XYLOSE
    DEFINE UNKN MASS-FLOW STREAM=624 SUBSTREAM=MIXED  &
        COMPONENT=UNKNOWN
    DEFINE SOLS MASS-FLOW STREAM=624 SUBSTREAM=MIXED  &
        COMPONENT=SOLSLDS
    DEFINE ARAB MASS-FLOW STREAM=624 SUBSTREAM=MIXED  &
        COMPONENT=ARABINOS
    DEFINE GALA MASS-FLOW STREAM=624 SUBSTREAM=MIXED  &
        COMPONENT=GALACTOS
    DEFINE XMANS MASS-FLOW STREAM=624 SUBSTREAM=MIXED  &
        COMPONENT=MANNOSE
    DEFINE GLUO MASS-FLOW STREAM=624 SUBSTREAM=MIXED  &
        COMPONENT=GLUCOLIG
    DEFINE CELB MASS-FLOW STREAM=624 SUBSTREAM=MIXED  &
        COMPONENT=CELLOB
    DEFINE XYLG MASS-FLOW STREAM=624 SUBSTREAM=MIXED  &
        COMPONENT=XYLOLIG
    DEFINE XMANO MASS-FLOW STREAM=624 SUBSTREAM=MIXED  &
        COMPONENT=MANOLIG
    DEFINE GALO MASS-FLOW STREAM=624 SUBSTREAM=MIXED  &
        COMPONENT=GALAOLIG
    DEFINE ARAO MASS-FLOW STREAM=624 SUBSTREAM=MIXED  &
        COMPONENT=ARABOLIG
    DEFINE ACEO MASS-FLOW STREAM=624 SUBSTREAM=MIXED  &
        COMPONENT=ACETOLIG
    DEFINE XYLL MASS-FLOW STREAM=624 SUBSTREAM=MIXED  &
        COMPONENT=XYLITOL
    DEFINE ETOH MASS-FLOW STREAM=624 SUBSTREAM=MIXED  &
        COMPONENT=ETHANOL
    DEFINE FURF MASS-FLOW STREAM=624 SUBSTREAM=MIXED  &
```

```
        COMPONENT=FURFURAL
    DEFINE XHMF MASS-FLOW STREAM=624 SUBSTREAM=MIXED  &
        COMPONENT=HMF
    DEFINE CH4 MASS-FLOW STREAM=624 SUBSTREAM=MIXED  &
        COMPONENT=CH4
    DEFINE XLACI MASS-FLOW STREAM=624 SUBSTREAM=MIXED  &
        COMPONENT=LACID
    DEFINE AACI MASS-FLOW STREAM=624 SUBSTREAM=MIXED  &
        COMPONENT=AACID
    DEFINE GLYC MASS-FLOW STREAM=624 SUBSTREAM=MIXED  &
        COMPONENT=GLYCEROL
    DEFINE SUCC MASS-FLOW STREAM=624 SUBSTREAM=MIXED  &
        COMPONENT=SUCCACID
    DEFINE DENA MASS-FLOW STREAM=624 SUBSTREAM=MIXED  &
        COMPONENT=DENAT
    DEFINE XOIL MASS-FLOW STREAM=624 SUBSTREAM=MIXED  &
        COMPONENT=OIL
    DEFINE XNNH4 MASS-FLOW STREAM=624 SUBSTREAM=CISOLID &
        COMPONENT=NH4ACET
C
C SET THE COD FOR COMPONENTS (KG O2/KG COMPONENT)
C THE COD VALUES ARE THE THEORETICAL O2 REQUIRED FOR COMBUSTION, BUT
C ONLY FOR SOLUBLE COMPONENTS.  INSOLUBLE COMPONENTS ARE ASSUMED TO
C BE NON-REACTIVE AND ARE NOT CONTAINED IN THE CALCULATION.
C
C  SOLUBLE C-CONTAINING COMPOUNDS
F      CGLUC = 1.07
F      CXYLO = 1.07
F      CUNKN = 1.07
F      CSOLS = 0.71
F      CETOH = 2.09
F      CARAB = 1.07
F      CGALA = 1.07
F      CMANS = 1.07
F      CGLUO = 1.07
F      CCELB = 1.07
F      CXYLG = 1.07
F      CMANO = 1.07
F      CGALO = 1.07
F      CARAO = 1.07
F      CXYLL = 1.22
F      CFURF = 1.67
F      CHMF  = 1.52
F      CCH4  = 4.0
F      CLACI = 1.07
F      CAACI = 1.07
F      CGLYC = 1.22
F      CSUCC = 0.95
F      CDENA = 3.52
F      COIL  = 2.89
F      CACEO = 1.07
F      CNNH4 = 1.143
C
C
C  CALCULATE HOURLY COD LOADINGS (KG/HR)
C
F     COD3   = GLUC*CGLUC + XYLO*CXYLO + UNKN*CUNKN + SOLS*CSOLS +
F    1         GALA*CGALA + XMANS*CMANS + ARAB*CARAB + GLUO*CGLUO +
F    2         CELB*CCELB + XYLG*CXYLG + XMANO*CMANO + GALO*CGALO +
F    3         ARAO*CARAO + XYLL*CXYLL + ETOH*CETOH + FURF*CFURF +
```

```
F    4         XHMF*CHMF   + CH4*CCH4   + XLACI*CLACI + AACI*CAACI +
F    5         GLYC*CGLYC + SUCC*CSUCC + DENA*CDENA + XOIL*COIL   +
F    6         ACEO*CACEO    + CNNH4*XNNH4
C
C
C  CALCULATE HOURLY BOD LOADINGS (KG/HR)
C
F      BODCOD = 0.70
C BODCOD IS THE BOD/COD RATIO AND WAS PROVIDED BY J. RUOCCO 7/29/98
C THIS VALUE IS WITHIN THE RANGE (0.45-0.78) PROVIDED IN PERRY'S
C 7TH EDITION, PG. 25-62.
C
F      BOD3 = BODCOD*COD3
C
C
C  CALCULATE DAILY BOD AND COD LOADINGS (LB/DAY)
C
F      CODDY3 = COD3*2.205*24.
F      BODDY3 = BOD3*2.205*24.
C
C 2.205 IS LB/KG AND 24 HR/DAY TO CONVERT KG/HR TO LB/DAY
C
C    WRITE ANSWERS TO THE HISTORY FILE
C
F     WRITE(NHSTRY,*)'COD3, BOD3= ',COD3, BOD3
F     WRITE(NHSTRY,*)'CODDY3, BODDY3= ',CODDY3, BODDY3
C
    READ-VARS GLUC
;
FORTRAN WWNUTR1
F       COMMON/ WWLOAD/ CODTOT, BODTOT, CODDAY, BODDAY
  DEFINE WWTNUT STREAM-VAR STREAM=630 SUBSTREAM=MIXED VARIABLE=MASS-FLOW
C
F      WWTFAC = 3.675E-2
C
C THE AMOUNT OF PHOSPHORIC ACID, UREA, MICRONUTRIENTS AND CAUSTIC
C
F      WWTNUT = WWTFAC*CODTOT
C
    EXECUTE AFTER FORTRAN CODCALC1

FORTRAN WWNUTR2
F       COMMON/ WWLOD2/ COD2, BOD2, CODDY2, BODDY2
  DEFINE WWTNUT STREAM-VAR STREAM=631 SUBSTREAM=MIXED VARIABLE=MASS-FLOW
C
F       WWTFAC = 1.701E-3
C
C WWTFAC IS THE AMOUNT OF POLYMER ADDED LB/LB COD TO THE AEROBIC
C SYSTEM.  IT IS THE AVERAGE VALUE PROVIDED BY J. RUOCCO FOR THE
C 3 SYSTEM DESIGNS (ENZYME, COUNTERCURRENT AND SOFTWOOD)
C POLYMER IS MODELLED AS THE COMPONENT WNUTR
C
F       WWTNUT = WWTFAC*COD2
C
    EXECUTE AFTER FORTRAN CODCALC2


SENSITIVITY MASSFLOW
F     COMMON /FRMSET/ SSFDAY, SSFVES, SSFVOL, SSFWV, PMPFLO
F     COMMON /CLSSET/ CLYLD, CLPROD, CLVES, CLVOL, CLWV
```

```
F     COMMON /WWLOAD/ CODTOT, BODTOT, CODDAY, BODDAY
F     COMMON /WWLOD2/ COD2, BOD2, CODDY2, BODDY2

 DEFINE T612   STREAM-VAR STREAM=612  SUBSTREAM=MIXED VARIABLE=TEMP
 DEFINE T613   STREAM-VAR STREAM=613  SUBSTREAM=MIXED VARIABLE=TEMP
 DEFINE QHX602 INFO-VAR   INFO=HEAT   VARIABLE=DUTY   STREAM=QH602
F     DT=((T612-T1040)-(T613-T1045))/DLOG((T612-T1040)/(T613-T1045))
F     DT = DABS(DT * 1.8)
F     U = 300.
C Convert from cal/s to BTU/hr
F     Q = QHX602 * 14.2869
C Area in square feet
F     A602 = DABS(Q) / (U * DT)
F     WRITE(NHSTRY,106)DT,Q,A602
F 106 FORMAT(' HX Calc Results',/,
F    1       ' DT = ',g12.5,/,
F    2       ' Q  = ',g12.5,/,
F    3       ' A602 = ',g12.5)
;
; WWT Volume Calculations
; THIS CODE CALCULATES THE SIZE OF THE ANAEROBIC DIGESTOR
;  AND THE AEROBIC SYSTEM.
;
      DEFINE TOTANA STREAM-PROP STREAM=632 PROPERTY=MASSFLW
      DEFINE TOTAER STREAM-PROP STREAM=618 PROPERTY=MASSFLW
C
F      ANLOAD = 12.0
F      AELOAD = 0.55
C
C ANLOAD AND AELOAD ARE THE SPACE LOADINGS IN G/L/D FOR THE ANAEROBIC
C AND AEROBIC SYSTEMS, RESPECTIVELY
C BOTH VALUES WERE PROVIDED BY J. RUOCCO
C
F      ANCONC = (CODTOT*1000.)/TOTANA
F      AECONC = (COD2*1000.)/TOTAER
C
C ANCONC AND AECONC ARE THE COD CONCENTRATIONS (G/L)
C THESE CALCULATIONS ASSUME THAT THE STREAMS HAVE THE SAME DENSITY
C AS FOR WATER (1 KG/L).
C
F      ANRT = (ANCONC*24.0)/ANLOAD
F      AERT = (AECONC*24.0)/AELOAD
C
C ANRT AND AERT ARE THE RESIDENCE TIME (H) FOR THE ANAEROBIC AND
C AEROBIC SYSTEMS, RESPECTIVELY
C
F      ANVOL = (TOTANA*ANRT)/3.7854
F      AEVOL = (TOTAER*AERT)/3.7854
C
C ANVOL AND AEVOL ARE THE VOLUMES (GAL) OF THE ANAEROBIC AND AEROBIC
C SYSTEMS, RESPECTIVELY.
C THIS CALCULATION ASSUMES THAT THE STREAMS HAVE THE SAME DENSITY AS
C WATER (1 KG/L).
C
F      WRITE(NHSTRY,*)'ANVOL,AEVOL= ',ANVOL, AEVOL
C Base Case of 4,569,250 Gal of Aerobic Lagoon,
C Requires 16 Lagoon Aerators
C or 285578 Gallons per Aerator
F      IWWTAG = AEVOL /  285578. + 1
F      WRITE(NHSTRY,'('' Num of Aerators: '',g12.5)')IWWTAG
```

ASPEN FLOWSHEET FOR WASTE WATER TREATMENT

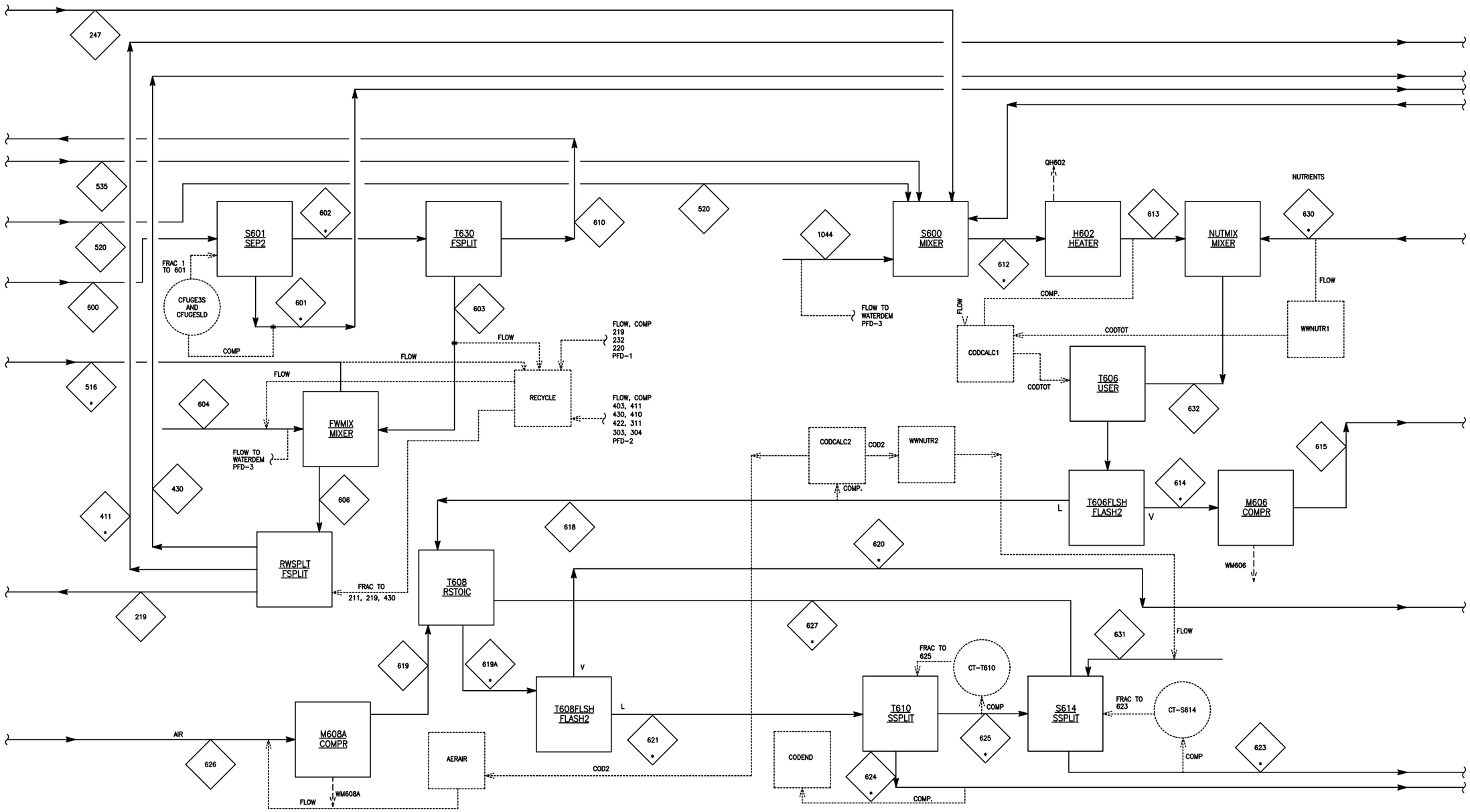

	SCALE	DATE
A		

NATIONAL RENEWABLE ENERGY LAORATORY
Biotechnology Center For Fuels And Chemicals

A600
ASPEN MODEL R9808B

A-600	BLOCK FLOW	A

I:\PROCESS\3104\WWTRTMT\DATA\WOOLEY\A-600.DWG

MERRICK

Attachment 2
Anaerobic Digestion Subroutine

```
C$ #3 BY: VLP DATE:  26-JUL-18-AUG-1998 DEVELOPED WWT MODEL
C$ #2 BY: ANAVI DATE: 15-NOV-1994 FIXED TYPO INI(NINT)-->INT(NINT)
C$ #1 BY: ANAVI DATE:  1-JUL-1994 NEW FOR USER MODELS
C
C     User Unit Operation Model for an Anaerobic Digestor
C
      SUBROUTINE USRANR (NSIN,    NINFI,  SIN1,   SIN2,    SIN3,
     2                   SIN4,    SINFI,  NSOUT,  NINFO,    SOUT1,
     3                   SOUT2,   SOUT3,  SOUT4,  SINFO,   NSUBS,
     4                   IDXSUB,  ITYPE,  NINT,   INT,     NREAL,
     5                   REAL,    IDS,    NPO,    NBOPST,  NIWORK,
     6                   IWORK,   NWORK,  WORK,   NSIZE,   SIZE,
     7                   INTSIZ,  LD)
C
      IMPLICIT REAL*8 (A-H, O-Z)
C
      DIMENSION SIN1(1), SIN2(1), SIN3(1), SIN4(1), SOUT1(1),
     2          SOUT2(1), SOUT3(1), SOUT4(1), IDXSUB(NSUBS),
     3          ITYPE(NSUBS), INT(NINT), REAL(NREAL), IDS(2,13),
     4          NBOPST(6,NPO), IWORK(NIWORK), WORK(NWORK),
     5          SIZE(NSIZE), INTSIZ(NSIZE)
C
      DIMENSION XAI(99)   ,  IDXAI(99) , XCI(99)  , IDXCI(99) ,
     2          XAO(99)   ,  IDXAO(99) , XCO(99)  , IDXCO(99) ,
     3          IPROG(2)  ,  RETN(228) , IRETN(6) , NFLAGW(11)
C
C
      COMMON /USER/ RMISS,  IMISS,  NGBAL, IPASS, IRESTR,
     2              ICONVG, LMSG,   LPMSG, KFLAG, NHSTRY,
     3              NRPT,   NTRMNL, ISIZE
C
      COMMON /WWLOAD/ CODTOT, BODTOT, CODDAY, BODDAY
C
C
      COMMON /NCOMP/ NCC
C
      COMMON /STWORK/ NRETN, NIRETN, NHXF, NHYF, NWYF,
     1                NSTW, KK1, KK2, KZ1, KZ2,
     2                KAI, KA2, KRET, KRSC, MF,
     3                MX, MX1, MX2, MY, MCS,
     4                MNC, MHXF, MHYF, MWY, MRETN,
     5                MIM, MIC, MIN, MPH, MIRETN,
     6                MKBAS, MKPHAS, MTAPP, MKBASS, MTAPPS,
     7                KEXT, KLNK, KFOUT, KFOUT1, KPHV,
     8                KPHL, KLNGM, MF1, MFST, MSTOIL,
     9                MSTOIS, HV, HL, HL1, HL2,
     *                SV, SL, SL1, SL2, VV,
     1                VL, VL1, VL2, XMWV, XMWL,
     2                XMWL1, XMWL2, HCS, HNCS, SSALT,
     3                VSALT, MSTOI, MLNKL, MLNKS, MLNKIN,
     4                MZWK, MST, MIEXST, MIZWK, HSALT,
     5                FSALT, RATIO, MIPOLY, MRPOLY
C
      COMMON /STWKWK/ LRSTW, LISTW, NCPM, NCPCS, NCPNC, NTRIAL,
     1                IDUM3(2), TCALC, PCALC, VCALC, QCALC, BETCAL,
```

```
     2                RDUM(21)
      COMMON /IDXCC / IDXCC(1)
      COMMON /IDXNCC/ IDXNCC(1)
      COMMON / MW   / XMW(1)
      COMMON /RPTGLB/ IREPFL, ISUB(10)
      COMMON /PLEX/ IB(1)
      DIMENSION B(1)
      EQUIVALENCE (IB(1),B(1))
C
C     VARIABLES IN ARGUMENT LIST
C
C     VAR          I/O     TYPE     DIM      DESCRIPTION
C     ----         ---     ----     ---      ----------------
C     SINFO         O       R               OUTLET WORK STREAM VECTOR
C     SIN1         I/O      R               INLET WASTEWATER STREAM VECTOR
C     SOUT1         O       R               OUTLET STREAM
C     NSUBS         I       I               NUMBER OF SUBSTREAMS
C     IDXSUB        I       I      NSUBS    SUBSTREAM INDEX VECTOR
C     ITYPE         I       I      NSUBS    SUBSTREAM TYPE VECTOR
C     NINT          I       I               LENGTH OF INPUT VECTOR
C     INT          I/O      I      NINT     INPUT INTEGER VECTOR
C     NREAL         I       I               LENGTH OF INPUT REAL VECTOR
C     REAL         I/O      R      NREAL    INPUT REAL VECTOR
C     IDS           I       I      2, 13    ID VECTOR
C     NPO           I       I               NUMBER OF PHYSICAL PROPERTY
OPTIONS
C     NBOPST        I       I      3, NPO   PHYSICAL PROPERTY OPTION SET
POINTER
C     NIWORK        I       I               LENGTH OF INPUT INTEGER WORK
VECTOR
C     IWORK         I       I      NIWORK   INPUT INTEGER WORK VECTOR
C     NWORK         I       I               LENGTH OF INPUT REAL WORK VECTOR
C     WORK          I       R      NWORK    INPUT REAL WORK VECTOR
C     REAL(1)       I       R               COD CONVERSION (FRAC)
C     REAL(2)       I       R               FRACTION CH4 YIELD ON COD
C     REAL(3)       I       R               FRACTION CELL MASS YIELD ON COD
C     REAL(4)       I       R               FRACTION OF CH4 IN OUTLET GAS
C     REAL(5)       I       R               FRACTION OF SOLUBLE SULFATE
C                                           COMPONENTS TO H2S
C
C  ********************************************************************
C  *                                                                  *
C  *          SET COMPONENT INDICES BY COMPONENT ID                   *
C  *                                                                  *
C  ********************************************************************
C
C     THIS ALLOWS MANIPULATION OF THE COMPONENTS BY THE INDICE
C     RATHER THAN THE POSITION IN THE COMPONENT MATRIX.
C
C  ********************************************************************
C  *                                                                  *
C  *          IN-HOUSE DATABASE COMPONENTS                            *
C  *                                                                  *
C  ********************************************************************
      NGLUC = KCCIDC('GLUCOSE')
      NCELU = KCCIDC('CELLULOSE')
      NXYLO = KCCIDC('XYLOSE')
      NXYLA = KCCIDC('XYLAN')
      NLIGN = KCCIDC('LIGNIN')
      NCELL = KCCIDC('CELLULASE')
```

```
      NBIOM = KCCIDC('BIOMASS')
      NZYMO = KCCIDC('ZYMO')
      NUNKN = KCCIDC('UNKNOWN')
      NSOLS = KCCIDC('SOLSLDS')
      NGYPS = KCCIDC('GYPSUM')
C
C  ******************************************************************
C  *                                                                *
C  *          IN-HOUSE DATABASE ALIASES                             *
C  *                                                                *
C  ******************************************************************
C
      NARAB = KCCIDC('ARABINOS')
      NGALA = KCCIDC('GALACTOS')
      NMANS = KCCIDC('MANNOSE')
      NARAN = KCCIDC('ARABINAN')
      NMANN = KCCIDC('MANNAN')
      NGALN = KCCIDC('GALACTAN')
      NGLUO = KCCIDC('GLUCOLIG')
      NCELB = KCCIDC('CELLOB')
      NXYLG = KCCIDC('XYLOLIG')
      NTAR = KCCIDC('TAR')
      NMANO = KCCIDC('MANOLIG')
      NGALO = KCCIDC('GALAOLIG')
      NARAO = KCCIDC('ARABOLIG')
      NACET = KCCIDC('ACETATE')
      NACEO = KCCIDC('ACETOLIG')
      NXYLL = KCCIDC('XYLITOL')
C
C  ******************************************************************
C  *                                                                *
C  *          SOLIDS DATABASE                                       *
C  *                                                                *
C  ******************************************************************
C
      NCASO = KCCIDC('CASO4')
      NCAH2 = KCCIDC('CAH2O2')
      NASH = KCCIDC('ASH')
C
C  ******************************************************************
C  *                                                                *
C  *          PURECOMPS DATABASE                                    *
C  *                                                                *
C  ******************************************************************
C
      NETOH = KCCIDC('ETHANOL')
      NH2O = KCCIDC('H2O')
      NFURF = KCCIDC('FURFURAL')
      NHMF = KCCIDC('HMF')
      NH2SO = KCCIDC('H2SO4')
      NN2 = KCCIDC('N2')
      NCO2 = KCCIDC('CO2')
      NO2 = KCCIDC('O2')
      NCH4 = KCCIDC('CH4')
      NNO = KCCIDC('NO')
      NNO2 = KCCIDC('NO2')
      NNH3 = KCCIDC('NH3')
      NLACI = KCCIDC('LACID')
      NAACI = KCCIDC('AACID')
      NNH4O = KCCIDC('NH4OH')
```

```
      NNH4S = KCCIDC('NH4SO4')
      NNH4A = KCCIDC('NH4ACET')
      NGLYC = KCCIDC('GLYCEROL')
      NSUCC = KCCIDC('SUCCACID')
      NDENA = KCCIDC('DENAT')
      NOIL = KCCIDC('OIL')
      NCSL = KCCIDC('CSL')
      NCNUT = KCCIDC('CNUTR')
      NWNUT = KCCIDC('WNUTR')
      NSO2 = KCCIDC('SO2')
      NH2S = KCCIDC('H2S')
C
C  ********************************************************************
C  *                                                                  *
C  *        DEFINE THE OFFSETS FOR THE SUBSTREAMS                     *
C  *                                                                  *
C  ********************************************************************
C
C     S1 IS MIXED AND S2 IS CISOLID.
C
      S1=IDXSUB(1) - 1
      S2=IDXSUB(2) - 1
C
C  ********************************************************************
C  *                                                                  *
C  *       FIND THE MOLECULAR WEIGHT FOR COMPONENTS                   *
C  *       IN THE MIXED SS, CELL MASS AND (NH4)2SO4                   *
C  ********************************************************************
C
      LMW = IFCMNC ('MW')
      CMW = B(LMW + NBIOM)
      GMW = B(LMW + NGLUC)
      XYMW = B(LMW + NXYLO)
      UMW = B(LMW + NUNKN)
      SMW = B(LMW + NSOLS)
      AMW = B(LMW + NARAB)
      GAMW = B(LMW + NGALA)
      WAMW = B(LMW + NMANS)
      GOMW = B(LMW + NGLUO)
      CBMW = B(LMW + NCELB)
      XGMW = B(LMW + NXYLG)
      WOMW = B(LMW + NMANO)
      GLMW = B(LMW + NGALO)
      AOMW = B(LMW + NARAO)
      AEMW = B(LMW + NACEO)
      XLMW = B(LMW + NXYLL)
      EMW = B(LMW + NETOH)
      FMW = B(LMW + NFURF)
      HMW = B(LMW + NHMF)
      C4MW = B(LMW + NCH4)
      ALMW = B(LMW + NLACI)
      AAMW = B(LMW + NAACI)
      GYMW = B(LMW + NGLYC)
      SUMW = B(LMW + NSUCC)
      DMW = B(LMW + NDENA)
      WLMW = B(LMW + NOIL)
      WMW = B(LMW + NH2O)
      SAMW = B(LMW + NH2SO)
      W1MW = B(LMW + NN2)
      CO2MW = B(LMW + NCO2)
```

```
      W2MW = B(LMW + NO2)
      W3MW = B(LMW + NNO)
      W4MW = B(LMW + NNO2)
      AMMW = B(LMW + NNH3)
      CSMW = B(LMW + NCSL)
      CNMW = B(LMW + NCNUT)
      WNMW = B(LMW + NWNUT)
      WSOMW =B(LMW + NSO2)
      HSMW = B(LMW + NH2S)
      ASMW = B(LMW + NNH4S)
      AMAMW = B(LMW + NNH4A)
C
C  ******************************************************************
C  *                                                                *
C  *       COPY INLET STREAM TO OUTLET STREAM                       *
C  *                                                                *
C  ******************************************************************
C
C
C Copy Each Component, NCC - Number Conventional Components
C NCC+1 Total Flow
C S1 is MIXED substream, S2 is CISOLID
C
      DO 100 K = 1, NCC+1
         SOUT1(S1+K) = SIN1(S1+K)
         SOUT1(S2+K) = SIN1(S2+K)
         WRITE(NHSTRY,*)'K (Component No.) = ',K
         WRITE(NHSTRY,*)'SOUT1(S1) MIXED (kmol/s) = ',SOUT1(S1+K)
         WRITE(NHSTRY,*)'SOUT1(S2) CISOLID (kmol/s) = ',SOUT1(S2+K)
  100 CONTINUE
C
C Copy Stream Properties
C NCC+2 Temperature (K)
C NCC+3 Pressure (Pa)
C NCC+4 Enthalpy (J/Kg)
C NCC+5 Molar Vapor Fraction
C NCC+6 Molar Liquid Fraction
C NCC+7 Entropy (J/Kg K)
C NCC+8 Density (Kg/m^3)
C NCC+9 Molecular Weight
C
      DO 200 K=NCC+2, NCC+9
         SOUT1(S1+K) = SIN1(S1+K)
         SOUT1(S2+K) = SIN1(S2+K)
         WRITE(NHSTRY,*)'S1M,SO1M= ',SIN1(S1+K),SOUT1(S1+K)
         WRITE(NHSTRY,*)'SIC,SO1C= ',SIN1(S2+K),SOUT1(S2+K)
  200 CONTINUE
C
C
C  ******************************************************************
C  *                                                                *
C  *       COPY ALL OF THE SOLUBLE NON-CARBON-CONTAINING COMPOUNDS  *
C  *       TO THE OUTLET STREAM.                                    *
C  ******************************************************************
C
C     THESE COMPONENTS WILL NOT BE CONVERTED.
C
       SOUT1(S1+NH2O)  = SIN1(S1+NH2O)
       SOUT1(S1+NH2SO) = SIN1(S1+NH2SO)
       SOUT1(S1+NN2)   = SIN1(S1+NN2)
```

```
       SOUT1(S1+NCO2)  = SIN1(S1+NCO2)
       SOUT1(S1+NO2)   = SIN1(S1+NO2)
       SOUT1(S1+NNO)   = SIN1(S1+NNO)
       SOUT1(S1+NNO2)  = SIN1(S1+NNO2)
       SOUT1(S1+NNH3)  = SIN1(S1+NNH3)
       SOUT1(S1+NCSL)  = SIN1(S1+NCSL)
       SOUT1(S1+NCNUT) = SIN1(S1+NCNUT)
       SOUT1(S1+NWNUT) = SIN1(S1+NWNUT)
       SOUT1(S1+NSO2)  = SIN1(S1+NSO2)
       SOUT1(S1+NH2S)  = SIN1(S1+NH2S)
C
C
C  ******************************************************************
C  *                                                                *
C  *       SET THE METHANE YIELD                                    *
C  *                                                                *
C  ******************************************************************
C
      CH4MAX = 350.
C CH4MAX IS THE MAXIMUM YIELD OF METHANE (L CH4/KG COD CONVERTED)
C AND WAS PROVIDED BY J. RUOCCO
C
      Write(NHSTRY,101)Real(1),Real(2),Real(3),Real(4),Real(5)
101   Format(' WWT Input Parameters',/,
     1       ' COD Converted in Anerobic:      ',g12.5,/,
     2       ' Methane Yield, Kg CH4/Kg COD:   ',g12.5,/,
     3       ' Cell Yield, Kg Cellmass/Kg COD: ',g12.5,/,
     4       ' Final Concentration of CH4:     ',g12.5,/,
     5       ' Frac of soluble SO4 converted:  ',g12.5)
      CODCON = REAL(1)
      CELLY = REAL(3)
      CODREM = 1.0-CODCON-CELLY
      CH4YLD = REAL(2)
C
C CODCON IS THE COD CONVERTED IN ANAEROBIC DIGESTION
C CELLY IS THE CELL YIELD KG CELL MASS/KG COD CONVERTED
C CODREM IS THE COD REMAINING AFTER ANAEROBIC DIGESTION
C CH4YLD IS THE METHANE YIELD KG CH4/KG COD CONVERTED
C
C  ******************************************************************
C  *                                                                *
C  *       MODIFY THE METHANE YIELD BASED ON TEMP                   *
C  *                                                                *
C  ******************************************************************
C
C THE FOLLOWING METHANE YIELD RELATIONSHIP BASED ON THE COD
C CONVERTED WAS OBTAINED FROM J. RUOCCO.
C
      WRITE(NHSTRY,*)'CODTOT,BODTOT= ',CODTOT, BODTOT
      IF (CODCON .GE. 0.9) THEN
         CODCON = 0.9
         CH4OUT = CODTOT*CH4MAX*CH4YLD*CODCON
      ELSE IF (CODCON .GT. 0.6) THEN
         CH4OUT = CODTOT*CH4MAX*CH4YLD*(1.0 + (CODCON - 0.9)*2.0)
      ELSE
         CH4OUT = CODTOT*CH4MAX*CH4YLD*(0.4 + (CODCON - 0.6)*5.0)
      END IF
C
C  ******************************************************************
C  *                                                                *
```

```
C  *       CALCULATE METHANE PRODUCED                                  *
C  *                                                                   *
C  *******************************************************************
C
C     CONVERT L OF METHANE TO KG-MOL (SI UNITS)
      RHO = 1.0/(82.05*298.16)
C  RHO IS THE DENSITY OF CH4 AT 1 ATM AND 25C (298 K)
C  AND HAS UNITS OF KG MOL/L
C  8.314 IS THE UNIVERSAL GAS CONSTANT (ATM-L/KG-MOL K)
      CH4PRO = CH4OUT*RHO/3600.
C 3600 SEC/HR
      CH4MAS = CH4PRO*C4MW
C CH4MAS IS THE MASS FLOWRATE (KG/S) OF METHANE FROM THE SYSTEM
C      WRITE(NHSTRY,*)'CH4PRO= ',CH4PRO
C CH4PRO IS THE AMOUNT OF METHANE PRODUCED KG-MOL/S
C
      SOUT1(S1+NCH4) = (SIN1(S1+NCH4))*CODREM + CH4PRO
C
C  *******************************************************************
C  *                                                                 *
C  *       CALCULATE CELL MASS PRODUCED                               *
C  *                                                                 *
C  *******************************************************************
C
C CELLY IS THE CELL YIELD IN KG/KG COD CONVERTED
      CELLM = CELLY*CODTOT*CH4YLD*CODCON
C
C CONVERT CELLS (KG/HR) TO KG-MOL/S
C
      CELLS = CELLM/(3600*CMW)
      SOUT1(S2+NBIOM) = SIN1(S2+NBIOM) + CELLS
C
C Adding Cell mass to the CISOLID substream and removing Mass from MIXED
C
      SOUT1(S2+NCC+1) = SOUT1(S2+NCC+1) + SOUT1(S2+NBIOM)
      SOUT1(S1+NCC+1) = SOUT1(S1+NCC+1) - SOUT1(S2+NBIOM)
C
C  *******************************************************************
C  *                                                                 *
C  *       CALCULATE SOLUBLE C-CONTAINING COMPOUNDS LEFT              *
C  *                                                                 *
C  *******************************************************************
C
      SOUT1(S1+NGLUC) = CODREM*SIN1(S1+NGLUC)
      SOUT1(S1+NXYLO) = CODREM*SIN1(S1+NXYLO)
      SOUT1(S1+NUNKN) = CODREM*SIN1(S1+NUNKN)
      SOUT1(S1+NSOLS) = CODREM*SIN1(S1+NSOLS)
      SOUT1(S1+NARAB) = CODREM*SIN1(S1+NARAB)
      SOUT1(S1+NGALA) = CODREM*SIN1(S1+NGALA)
      SOUT1(S1+NMANS) = CODREM*SIN1(S1+NMANS)
      SOUT1(S1+NGLUO) = CODREM*SIN1(S1+NGLUO)
      SOUT1(S1+NCELB) = CODREM*SIN1(S1+NCELB)
      SOUT1(S1+NXYLG) = CODREM*SIN1(S1+NXYLG)
      SOUT1(S1+NMANO) = CODREM*SIN1(S1+NMANO)
      SOUT1(S1+NGALO) = CODREM*SIN1(S1+NGALO)
      SOUT1(S1+NARAO) = CODREM*SIN1(S1+NARAO)
      SOUT1(S1+NACEO) = CODREM*SIN1(S1+NACEO)
      SOUT1(S1+NXYLL) = CODREM*SIN1(S1+NXYLL)
      SOUT1(S1+NETOH) = CODREM*SIN1(S1+NETOH)
      SOUT1(S1+NFURF) = CODREM*SIN1(S1+NFURF)
```

```
      SOUT1(S1+NHMF)  = CODREM*SIN1(S1+NHMF)
      SOUT1(S1+NLACI) = CODREM*SIN1(S1+NLACI)
      SOUT1(S1+NAACI) = CODREM*SIN1(S1+NAACI)
      SOUT1(S1+NGLYC) = CODREM*SIN1(S1+NGLYC)
      SOUT1(S1+NSUCC) = CODREM*SIN1(S1+NSUCC)
      SOUT1(S1+NDENA) = CODREM*SIN1(S1+NDENA)
      SOUT1(S1+NOIL)  = CODREM*SIN1(S1+NOIL)
      SOUT1(S2+NNH4A)  = CODREM*SIN1(S2+NNH4A)
C
C Subtracting converted NH4ACET (Not Remaining) from CISOLID substream and
C adding Mass to MIXED
C
      SOUT1(S2+NCC+1) = SOUT1(S2+NCC+1) - (SIN1(S2+NNH4A)
     1                - SOUT1(S2+NNH4A))
      SOUT1(S1+NCC+1) = SOUT1(S1+NCC+1) + (SIN1(S2+NNH4A)
     1                - SOUT1(S2+NNH4A))
CC
C  ********************************************************************
C  *                                                                  *
C  *       CALCULATE MASS OF REACTABLE SUBSTANCES INTO DIGESTOR       *
C  *                                                                  *
C  ********************************************************************
C
      REACIN =  SIN1(S1+NGLUC)*GMW +  SIN1(S1+NXYLO)*XYMW +
     2          SIN1(S1+NUNKN)*UMW +  SIN1(S1+NSOLS)*SMW +
     3          SIN1(S1+NARAB)*AMW +  SIN1(S1+NGALA)*GAMW +
     4          SIN1(S1+NMANS)*WAMW +  SIN1(S1+NGLUO)*GOMW +
     5          SIN1(S1+NCELB)*CBMW +  SIN1(S1+NXYLG)*XGMW +
     6          SIN1(S1+NMANO)*WOMW +  SIN1(S1+NGALO)*GLMW +
     7          SIN1(S1+NARAO)*AOMW +  SIN1(S1+NACEO)*AEMW +
     8          SIN1(S1+NXYLL)*XLMW +  SIN1(S1+NETOH)*EMW +
     9          SIN1(S1+NFURF)*FMW  +  SIN1(S1+NHMF)*HMW  +
     *          SIN1(S1+NCH4)*C4MW  +  SIN1(S1+NLACI)*ALMW +
     1          SIN1(S1+NAACI)*AAMW +  SIN1(S1+NGLYC)*GYMW +
     2          SIN1(S1+NSUCC)*SUMW +  SIN1(S1+NDENA)*DMW +
     3          SIN1(S1+NOIL)*WLMW   + SIN1(S2+NNH4A)*AMAMW

C
C  CALCULATE THE MASS THAT REACTED
C
      REACTD = (1.-CODREM)*REACIN
C
C  ********************************************************************
C  *                                                                  *
C  *       CALCULATE CO2 PRODUCTION                                   *
C  *                                                                  *
C  ********************************************************************
C
C  CALCULATE THE AMOUNT AVAILABLE FOR CO2 PRODUCTION
C
      CO2AVL = REACTD - (CELLM/3600.) -  CH4MAS
C
      WRITE(NHSTRY,*)'CO2AVL= ',CO2AVL
C CALCULATE THE FINAL FLOWRATE OF CO2 OUT
C
      CO2OUT = CO2AVL/CO2MW
      WRITE(NHSTRY,*)'CO2OUT= ',CO2OUT
C DETERMINE THE MOLE FRACTION OF CO2 POTENTIALLY FORMED
      CO2FRC = CO2OUT/(CO2OUT + CH4PRO)
C     THE FINAL CONCENTRATION OF  CH4 MAY BE SET
```

```
      CH4FIN = REAL(4)
      CO2FIN = CH4PRO/CH4FIN - CH4PRO
      WRITE(NHSTRY,*)'CO2FIN= ',CO2FIN
C CHECK TO SEE IF THE CO2 CALCULATED BY SETTING THE VOLUMETRIC
C OUTLET IS GREATER THAN THE POTENTIAL FORMED.  IF SO, THEN SET
C THE CO2 OUT EQUAL TO THE MAXIMUM POTENTIAL.  IF NOT, SET THE
C CO2 FORMED EQUAL TO THE VOLUMETRIC SPECIFICATION AND MAKE
C WATER WITH THE REMAINING.
      IF (CO2FIN .GT. CO2OUT) THEN
         SOUT1(S1+NCO2) = CO2OUT + SIN1(S1+NCO2)
      ELSE
         SOUT1(S1+NCO2) = CO2FIN + SIN1(S1+NCO2)
         SOUT1(S1+NH2O) = (CO2OUT-CO2FIN)*(CO2MW/WMW)+SOUT1(S1+NH2O)
      END IF
C
C   AS A CHECK, CALCULATE THE MOLE FRACTION CO2 VS CH4
C   AND WRITE OUT THE RESULTS.
C
      CO2FRC = SOUT1(S1+NCO2)/(SOUT1(S1+NCO2) + SOUT1(S1+NCH4))
      CH4FRC = SOUT1(S1+NCH4)/(SOUT1(S1+NCO2) + SOUT1(S1+NCH4))
C
      WRITE(NHSTRY,*)'CO2FRC,CH4FRC= ',CO2FRC,CH4FRC
C
C
C  ******************************************************************
C  *                                                                *
C  *       CALCULATE H2S PRODUCTION                                 *
C  *                                                                *
C  ******************************************************************
C
C  ASSUME H2S WILL BE FORMED FROM ALL SOLUBLE SO4-CONTAINING COMPOUNDS
C
       SACON = 0.347
C SACON IS THE SULFURIC ACID CONVERSION TO H2S (LB H2S/LB H2SO4)
      ASCON = 0.273
C ASCON IS THE AMMONIUM SULFATE CONVERSION TO H2S (LB H2S/LB (NH4)2SO4)
C
       CEFF = REAL(5)
C      CEFF = FRACTION OF SOLUBLE SO4-CONTAINING COMPOUNDS CONVERTED
C
      H2SFRM = SACON*SIN1(S1+NH2SO)*SAMW*CEFF +
     1         ASCON*SIN1(S2+NNH4S)*ASMW*CEFF
C H2SFRM IS THE AMOUNT OF H2S FORMED (KG/S)
C
      H2SMOL = H2SFRM/HSMW
C H2SMOL IS THE H2S FORMED ON A MOLE BASIS (KG-MOL/S)
C
      WRITE(NHSTRY,*)'H2SFRM,H2SMOL= ',H2SFRM,H2SMOL
C ASSUME WHAT IS NOT CONVERTED TO H2S GOES TO WATER
C
      WATFRM = (1-SACON)*SIN1(S1+NH2SO)*SAMW*CEFF +
     1         (1-ASCON)*SIN1(S2+NNH4S)*ASMW*CEFF
      WATMOL = WATFRM/WMW
      WRITE(NHSTRY,*)'WATFRM,WATMOL= ',WATFRM,WATMOL
C
      SOUT1(S1+NH2SO) = (1.0-CEFF)*SIN1(S1+NH2SO)
      SOUT1(S2+NNH4S) = (1.0-CEFF)*SIN1(S2+NNH4S)
C CALCULATE THE OUTLET FLOWRATES
      SOUT1(S1+NH2S) = SOUT1(S1+NH2S) + H2SMOL
      SOUT1(S1+NH2O) = SOUT1(S1+NH2O) + WATMOL
```

```
C
      RETURN
      END
```

Attachment 3
Wastewater Treatment Calculation Spreadsheets

Aerobic Digestion Energy Balance Calculations

Cell Mass MW	**23.238**	**% Conversion to Cell Mass**	**30.00%**
Cell Mass HHV	**9,843**	**% Total Conversion**	**90.00%**
		% Conversion to CO2/H2O	**60.00%**

Basis: **1 lb component -------> 1 lb cell mass**

Mixed SS Component	COD kg/kg	MW	Stoich. Factor MWComp/ MW Cells	HHV (Btu/lb)	HHV Product (Btu/lb)	HHV Decrease (Btu/lb)	
Glucose/Mannose/Galactose	1.07	180.16	7.7528	6,729	2952.9	3775.8	OK
Xylose/Arabinose	1.07	150.132	6.4606	6,739	2952.9	3786.31	OK
Xylitol	1.22	152.15	6.5475	7,458	2952.9	4504.7	OK
Soluble Solids	0.711	16.5844	0.7137	14,360	2952.9	11407.35	OK
Soluble Unknown	1.07	15.0134	0.6461	6,201	2952.9	3248.44	OK
C-6 Oligomers	1.07	162.115	6.9763	6,719	2952.9	3766.4	OK
C-5 Oligomers	1.07	132.0942	5.6844	6,729	2952.9	3775.9	OK
Cellobiose	1.07	342.2398	14.7276	8,306	2952.9	5352.6	OK
Furfural	1.67	96	4.1312	9,107	2952.9	6153.7	OK
HMF	1.52	126.1116	5.4270	10,296	2952.9	7343.1	OK
Acetic Acid	1.07	60	2.5820	6,463	2952.9	3510.2	OK
Lactic Acid	1.07	90	3.8730	6,470	2952.9	3516.7	OK
Succinic Acid	0.95	118	5.0779	5,483	2952.9	2530.5	OK
Glycerol	1.22	92	3.9590	7,720	2952.9	4767	OK
Oil	2.89	282	12.1353	17,045	2952.9	14091.7	OK
Ethanol	2.09	46	1.9795	12,762	2952.9	9809.1	OK

Anaerobic Digestion Yields

CH4 Yield	**350**	**l/kg COD converted**
	0.2214793	**kg CH4/kgCOD converted at 35 C**
Cell Yield	**0.03**	**kg/kg COD converted**

Compound	COD kg/kg	CH4 kg	Cell Mass kg	Potential CO2 kg	CH4 Wt Frac	CO2 Wt Frac	CH4 Moles	CO2 Moles	CH4 Molar Frac	CO2 Molar Frac
Glucose, Xylose, etc.	1.07	0.237	0.032	0.731	0.245	0.755	0.015	0.017	0.463	0.537
Furfural	1.67	0.370	0.050	0.580	0.389	0.611	0.023	0.014	0.625	0.375
HMF	1.52	0.337	0.046	0.618	0.353	0.647	0.021	0.015	0.589	0.411
Ethanol	2.09	0.463	0.063	0.474	0.494	0.506	0.029	0.012	0.716	0.284
Lactic Acid	1.07	0.237	0.032	0.731	0.245	0.755	0.015	0.017	0.463	0.537
Acetic Acid	1.07	0.237	0.032	0.731	0.245	0.755	0.015	0.017	0.463	0.537
Glycerol	1.22	0.270	0.037	0.693	0.280	0.720	0.017	0.016	0.508	0.492
Succinic Acid	0.95	0.210	0.029	0.761	0.217	0.783	0.013	0.018	0.425	0.575
Xylitol	1.22	0.270	0.037	0.693	0.280	0.720	0.017	0.016	0.508	0.492

Attachment 4

COD Data and Projected Calculations

Projected COD Calculation
Comparison with Actual Data

Compound	Concentration (mg/L)	COD Factor kg O2/kg comp.	Estimated COD kg O2
Cellobiose (incl. w/glucose)	0	1.07	0
Glucose	6,140	1.07	6,570
Galactose	2,170	1.07	2,322
Mannose	4,420	1.07	4,729
Xylose	2,840	1.07	3,039
Arabinose	700	1.07	749
Ethanol	0	2.09	0
Cell Mass*	1,800	0	0
Glycerol	1,020	1.22	1,244
Xylitol	950	1.22	1,159
Acetic Acid	2,980	1.07	3,189
Lactic Acid	3,330	1.07	3,563
Succinic Acid	1,930	0.95	1,834
		Total	**28,398**
		Avg. COD measured	**27,199**

* Cell mass is insoluble and so it has an assumed COD of 0

Attachment 5

Calculation Flow Diagram

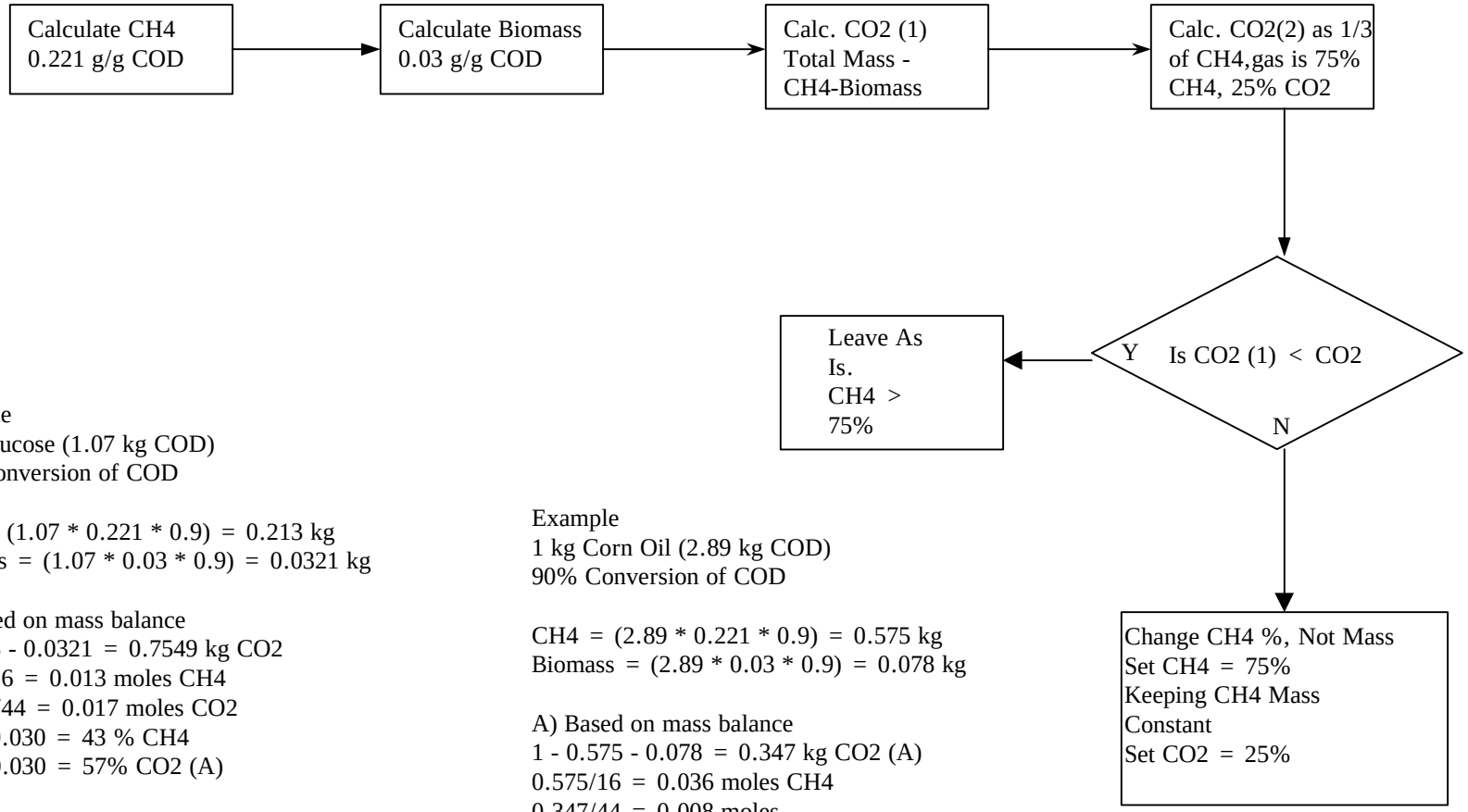

Example
1 kg Glucose (1.07 kg COD)
90% Conversion of COD

CH4 = (1.07 * 0.221 * 0.9) = 0.213 kg
Biomass = (1.07 * 0.03 * 0.9) = 0.0321 kg

A) Based on mass balance
1-0.213 - 0.0321 = 0.7549 kg CO2
0.213/16 = 0.013 moles CH4
0.7549/44 = 0.017 moles CO2
0.013/0.030 = 43 % CH4
0.017/0.030 = 57% CO2 (A)

B) Set CH4 = 75%
CO2(B) = 0.013 moles CH4/0.75 - 0.013 = 0.0043 moles
CO2(A) < CO2(B) N, Change CO2

New CO2 = 0.75 * 0.013 = 0.033 moles of CO2
0.098 * 44 = 0.143 kg CO2
Remainder H2O, 1 - 0.143 - 0.7549 = 0.1021 kg H2O

Example
1 kg Corn Oil (2.89 kg COD)
90% Conversion of COD

CH4 = (2.89 * 0.221 * 0.9) = 0.575 kg
Biomass = (2.89 * 0.03 * 0.9) = 0.078 kg

A) Based on mass balance
1 - 0.575 - 0.078 = 0.347 kg CO2 (A)
0.575/16 = 0.036 moles CH4
0.347/44 = 0.008 moles
0.036/0.044 = 82% CH4
0.008/0/044 = 18% CO2 (A)

B) Set CH4 = 75%
CO2 (B) = 0.036 Moles CH4/.75 - 0.036 = 0.012 moles

Appendix H

Evaporator Syrup Disposition

EVALUATION OF ALTERNATE EVAPORATOR SYRUP DISPOSITIONS

8/10/98 Rev 2

BASIS

From ASPEN model, 7/22/98, R9805M, stream 531:

Total Flow	81023 kg/hr, 356 gpm (was 260 gpm prior to Delta T input)	
Insolubles	1.8%	
Solubles	5.9%	
Temp.	62 ^{O}C	
Pressure	0.21 atmos. ??	

Soluble Composition:

Ethanol		1 kg/hr
Water	69910	
Xylose	393	
Arabinose		315
Other sugars	1625	
Cellobiose		213
Glucose Oligomers	1025	
Xylose Oligomers	556	
Acetic Acid	1456	
Sulfuric Acid	246	
Furfural		27
HMF		244

Insolubles Composition:

Cellulose		54 kg/hr
Xylan	12	
Other sugar polymers	2	
Biomass		397
Zymo	397	
Lignin	346	

Assumptions

- Note that all of the following costs are for incremental changes from a base case and are not the total installed cost of the facilities. In the base case there is no defined destination for the syrup and there are no capital or operating expenses for the handling and disposal of the syrup.

- In calculating the capitalized costs, operating costs are taken to equal capital costs in three to five years. For example, 3 to 5 years of fuel costs of $1000/yr are equivalent to $3000 to $5000 in capital cost on the first day.

- Delta-T has evolved a design of the evaporator and distillation systems to include a 3-effect evaporator that , presumably, uses the available heat from the distillation system. The reason that the syrup stream (Stream 531) is now only 7.7% solids concentration is that this is the maximum concentration available from "free" heat with a 3-effect system.

- Flow rate for Stream 531 is therefore larger due to the lower concentration. The stream is now about 356 GPM rather than 260 GPM.

- Corn-to-ethanol designs that maximize syrup concentration to about 75% solids are not "achievable" using the Delta-T design.

- There is no proposed use of the syrup as a product stream. Merrick proposes design alternatives of <u>syrup use in the existing lignin fired boiler</u> for:

  Case 1 fuel sprayed on lignin boiler fuel - as is
  Case 2 additional evaporation (separate step or 4th effect) to fuel value = zero
  Case 3 use of "free" low level heat with additional evaporation to fuel = zero

  or <u>treatment as wastewater</u>:
  Case 4 Treatment of the syrup stream in the waste water unit
  A. Syrup has separate waste water unit from other plant waste water streams due to its high (75,000 mg/L) COD
  B. Syrup and other waste waters have separate anaerobic treaters but share the aerobic treating unit
  C. Syrup and other waste waters are blended upstream of waste water treating.
  (Please see attached block schematic.)

  Case 5 Deletion of the 2nd and 3rd effects of the evaporator (downstream of the centrifuge) with the more dilute "syrup" sent to anaerobic/aerobic treatment.

  Case 6 All three evaporator effects are deleted. Distillation bottoms is centrifuged (possibly other separation devices ?) to remove lignin as a cake having the same water content as the current design. Seventy five percent of the liquor stream goes to anaerobic water treat and the

remaining 25% is recycled (possibly after dilution with treated water).

- The average heat of combustion of the solids in the syrup was taken to be 8000 BTU/lb. Water was vaporized at atmospheric pressure in calculating net heating value of the stream.

- The following utility costs are used in the evaluation:
  - Fuel gas = $2.00 per mmBTU
  - Fresh water = $2.00 per 1000 gallons
  - Electric power = $0.042 per KWH
  - Sludge disposal = $ 0.015 per pound

CASE 1

Leave the evaporator as it is currently designed in the model. Spray the syrup on the lignin and burn it in the boiler. Since syrup is largely water, additional water will need to be made up compared to cases where this water is reclaimed and recycled.

1. Incremental Capital Cost: $200k spraying equipment.

2. Incremental Fuel Cost: $88,440 / yr

3. Incremental Water Costs: $342,150 / yr

4. Incremental Power Costs: $0

5. Incremental Sludge Costs $0

CASE 2

Add additional evaporating capacity either as a fourth effect to the current evaporator (greater vacuum) or as a stand alone single effect evaporator. Assume each of these options is roughly equivalent in capital cost. Increase the concentration of the solids in the syrup until the heat of combustion of the solids is exactly equal to the heat required to evaporate all of the remaining water in the syrup stream. More net heat is available in the boiler (more steam produced) but this is offset by increased heat use in the evaporator(s). Assume that Delta T used all of the available waste heat in the evaporator and “new” heat is at the cost of fuel gas.

1. Incremental Capital Cost : $1,400k + 200k = $1,600k

2. Incremental Fuel Cost : $143,425

3. Incremental Water Costs : $324,180

4. Incremental Power Costs $0

5. Incremental Sludge Costs $0

CASE 3

Assume that there is additional low temperature level heat available from somewhere in the process. Appendix A of the report indicates that this likely. For example, distillation reflux condensers are large heat loads containing heat which might be useful here. Add evaporation capital cost and assume that syrup will be concentrated until the heat of combustion of the syrup exactly matches the heat to vaporize the water in the syrup.

1. Incremental Capital Cost : $1,400 + $200 = $1,600

2. Incremental Fuel Cost : $0

3. Incremental Water Costs : $324,180

4. Incremental Power Costs $0

5. Incremental Sludge Costs $0

CASE 4

With evaporation remaining as it is currently designed route the syrup to water treating in one of the ways described below. (See attached block schematic)

Subcase A In this case syrup containing 75,000 mg/L COD is processed in a separate train of anaerobic and aerobic equipment. The remainder of the waste water (mixed waste) which contains only 16,000 mg/L COD has its own train of equipment.

1. Incremental Capital Cost: $4,238K

2. Incremental Fuel Cost: ($272,500)

3. Incremental Water Costs: $0

4. Incremental Poer Costs $460,020

5. Incremental Sludge Costs $72,436

Subcase B In this case the syrup and the mixed waste have separate anaerobic treating equipment but share the aerobic treating.

1. Incremental Capital Cost: $4,159K

2. Incremental Fuel Cost: ($272,500)

3. Incremental Water Costs: $0

4. Incremental Power Cost: $460,500

5. Incremental Sludge Cost: $72,436

Subcase C In this case syrup and mixed waste are blended upstream of waste water treatment and therefore share all treating equipment.

1. Incremental Capital Cost: $3,390K

2. Incremental Fuel Cost: ($272,500)

3. Incremental Water Costs: $0

4. Incremental Power Cost: $460,500

5. Incremental Sludge Cost: $72,436

In addition to capital cost the following operating cost factors must be considered in making the water treating process evaluations.

- The CO_2/Methane gas produced in anaerobic treatment has a positive fuel value equal to $2.00 per mmBTU.
- The aerobic blower/compressor electric power consumption should be valued at $0.042 per KWH.
- Treated water is recycled to the process and therefore backs out fresh water. The recycled water should be valued at $2.00 per 1000 gallons.
- Aerobic sludge has a cost for disposal of 1.5 cents per pound.

CASE 5

This case considers deleting the 2nd and 3rd effects of the evaporator and processing the dilute waste water directly in anaerobic and aerobic treatment. The first effect was not deleted because the size of the expensive centrifuge(s) would be drastically increased. Feed to water treating is increased by 600 gpm over Case 1 because water which was backset from the 2nd and 3rd effects must now be processed in water treating.

1. Incremental Capital Cost: $1,942K
2. Incremental Fuel Cost: ($272,500)
3. Incremental Water Costs: $0
4. Incremental Power Cost: $652,460
5. Incremental Sludge Cost: $96,576

CASE 6

This case considers complete elimination of the evaporator. Distillation bottoms would be processed in centrifuges or similar separation devices. Cake, having the same water content as the current design would be the lignin stream to the boiler burner. The centrifuge liquor would be split with 25% recycle to the process with treated water and 75% sent directly to anaerobic treating.

1. Incremental Capital Cost: $27,551K
2. Incremental Fuel Cost: ($272,500)
3. Incremental Water Costs: $0
4. Incremental Power Cost: $1,545K
5. Incremental Sludge Cost: $368,841

OVERALL COMPARISON:

	Capitalized Capital $ 5 Year	Operating Costs: Fuel $	Water $	Sludge	Electric: Power $	Total $ * 3 Year
Case 1	$200K $88,440	$342,150	$0	$0	$1,492K	$2,353K
Case 2	$1,600K $3,938K	$143,425	$324,180	$0	$0	$3,003K
Case 3	$1,600K $3,221K	$0	$324,180	$0	$0	$2,573K
Case 4						
A	$4,238K	($272,500)	$0	$72,436	$460,020	$5,017K $5,538K
B	$4,159K	($272,500)	$0	$72,436	$460,500	$4,940K $5,460K
C	$3,390K	($272,500)	$0	$72,436	$460,500	$4,171K $4,692K
Case 5	$1,942K	($272,500)	$0	$96,576	$652,460	$3,312K $4,225K
Case 6	$27,551K $35,758K	($272,500)	$0		$368,841	$1,545K $32,475K

* For example, the expenditure of $1000 per year in operating cost for 3 years or the expenditure of $3000 additional capital in the first year are equivalent.

CONCLUSION:

From the comparison made above, Case 1 is the most economical choice for evaporator syrup treatment. In Case 1 the fuel is sprayed onto the lignin boiler fuel. It is the least costly in both the three and five year capitalized total. Case 1 would be the best and most cost-effective process to use in the treatment of the evaporator syrup.

NREL SOFTWOOD EVAPORATOR SYRUP 7/23/98

PERCENT SOLIDS [1]	COMB. BTU PER 100#	BTU TO EVAP. WATER PER 100#	NET HEAT OF COMB. BTU/100lbs [2]	
1	8000	96060	-89271.7	
2	16000	95089	-81513.4	
3	24000	94119	-73755.1	
4	32000	93149	-65996.8	
5	40000	92179	-58238.5	
6	48000	91208	-50480.2	
7	56000	90238	-42721.9	
8	64000	89268	-34963.6	
9	72000	88297	-27205.3	
10	80000	87327	-19447	
11	88000	86357	-11688.7	
12	96000	85386	-3930.4	
13	104000	84416	3827.9	← BREAK EVEN
14	112000	83446	11586.2	
15	120000	82476	19344.5	
16	128000	81505	27102.8	
17	136000	80535	34861.1	
18	144000	79565	42619.4	
19	152000	78594	50377.7	
20	160000	77624	58136	
21	168000	76654	65894.3	
22	176000	75683	73652.6	
23	184000	74713	81410.9	
24	192000	73743	89169.2	
25	200000	72773	96927.5	

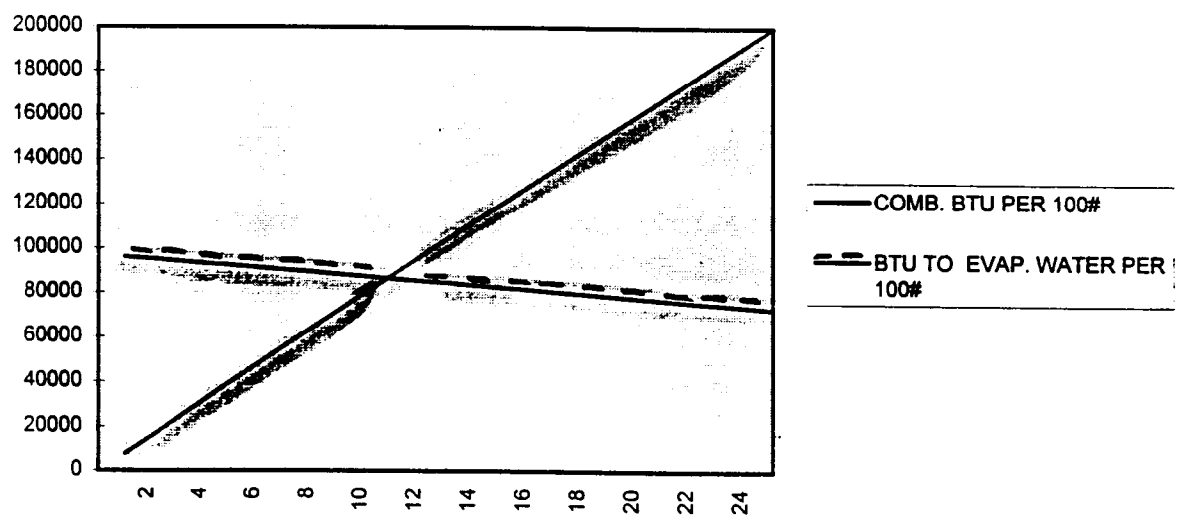

1. Both soluble and insoluble.
2. Less heat lost in flue gas @ 350 °F.

Ethanol Production Process Engineering Analysis

NREL Year 2000 Case Co-Current Pretreatment & Enzymatic Hydrolysis

Syrup to Burner

All Values in 1995$

Ethanol Production Cost **$1.37**

Ethanol Production (MM Gal. / Year)	54.5
Ethanol Yield (Gal / Dry Ton Feedstock)	74
Feedstock Cost $/Dry Ton	15

Capital Costs	
Feed Handling	$4,900,000
Pretreatment/Detox	$25,300,000
SSCF	$14,300,000
Cellulase	$11,600,000
Distillation	$12,200,000
WWT	$12,300,000
Storage	$1,800,000
Boiler/Turbogen	$31,400,000
Utilities	$8,500,000
Total Equipment Cost	$122,300,000
Added Costs	$89,800,000
(% of TEC)	42%
Total Project Investment	$212,100,000

Operating Costs (cents/gal ethanol)	
Feedstock	21.3
CSL	5.0
Denaturant	3.9
Other Raw Materials	14.7
Waste Disposal	1.3
Electricity	-3.3
Fixed Costs	21.3
Capital Recovery	72.4

Operating Costs ($/yr)	
Feedstock	$11,600,000
CSL	$2,800,000
Denaturant	$2,100,000
Other Raw Matl. Costs	$8,000,000
Waste Disposal	$700,000
Electricity Credit	-$1,800,000
Fixed Costs	$11,600,000
Capital Recovery	$39,500,000
Cap. Recovery Factor	0.186

Theoretical Yields	Ethanol MM Gal/year
Cellulose	59.3
Xylan	27.1
Arabinan	1.1
Mannan	5.5
Galactan	0.3
Total Maximum (MM Gal/yr)	93.3
Maximum Yield (Gal/ton)	127.2
Current Yield (Actual/Theor)	58%

Ethanol Production Process Engineering Analysis

NREL Year 2000 Case Co-Current Pretreatment & Enzymatic Hydrolysis

Syrup to WWT

All Values in 1995$

Ethanol Production Cost **$1.43**

Ethanol Production (MM Gal. / Year)	54.5
Ethanol Yield (Gal / Dry Ton Feedstock)	74
Feedstock Cost $/Dry Ton	15

Capital Costs	
Feed Handling	$4,900,000
Pretreatment/Detox	$25,300,000
SSCF	$14,300,000
Cellulase	$11,600,000
Distillation	$12,200,000
WWT	$17,300,000
Storage	$1,800,000
Boiler/Turbogen	$29,400,000
Utilities	$8,700,000
Total Equipment Cost	$125,600,000
Added Costs	$91,900,000
(% of TEC)	42%
Total Project Investment	$217,500,000

Operating Costs (cents/gal ethanol)	
Feedstock	21.3
CSL	5.0
Denaturant	3.9
Other Raw Materials	15.7
Waste Disposal	1.4
Electricity	-0.1
Fixed Costs	21.7
Capital Recovery	74.1

Operating Costs ($/yr)	
Feedstock	$11,600,000
CSL	$2,800,000
Denaturant	$2,100,000
Other Raw Matl. Costs	$8,500,000
Waste Disposal	$800,000
Electricity Credit	-$100,000
Fixed Costs	$11,800,000
Capital Recovery	$40,400,000
Cap. Recovery Factor	0.186

Theoretical Yields	Ethanol MM Gal/year
Cellulose	59.3
Xylan	27.1
Arabinan	1.1
Mannan	5.5
Galactan	0.3
Total Maximum (MM Gal/yr)	93.3
Maximum Yield (Gal/ton)	127.2
Current Yield (Actual/Theor)	58%

Ethanol Production Process Engineering Analysis

NREL Year 2000 Case Co-Current Pretreatment & Enzymatic Hydrolysis

Syrup to Nowhere

All Values in 1995$

Ethanol Production Cost **$1.37**

Ethanol Production (MM Gal. / Year)	54.5
Ethanol Yield (Gal / Dry Ton Feedstock)	74
Feedstock Cost $/Dry Ton	15

Capital Costs	
Feed Handling	$4,900,000
Pretreatment/Detox	$25,300,000
SSCF	$14,300,000
Cellulase	$11,600,000
Distillation	$12,200,000
WWT	$12,300,000
Storage	$1,800,000
Boiler/Turbogen	$28,900,000
Utilities	$8,300,000
Total Equipment Cost	$119,700,000
Added Costs	$88,100,000
(% of TEC)	42%
Total Project Investment	$207,800,000

Operating Costs (cents/gal ethanol)	
Feedstock	21.3
CSL	5.0
Denaturant	3.9
Other Raw Materials	14.6
Waste Disposal	1.3
Electricity	-0.5
Fixed Costs	21.0
Capital Recovery	70.8

Operating Costs ($/yr)	
Feedstock	$11,600,000
CSL	$2,800,000
Denaturant	$2,100,000
Other Raw Matl. Costs	$8,000,000
Waste Disposal	$700,000
Electricity Credit	-$200,000
Fixed Costs	$11,400,000
Capital Recovery	$38,600,000
Cap. Recovery Factor	0.186

Theoretical Yields	Ethanol MM Gal/year
Cellulose	59.3
Xylan	27.1
Arabinan	1.1
Mannan	5.5
Galactan	0.3
Total Maximum (MM Gal/yr)	93.3
Maximum Yield (Gal/ton)	127.2
Current Yield (Actual/Theor)	58%

Appendix I

Process Flow Diagrams

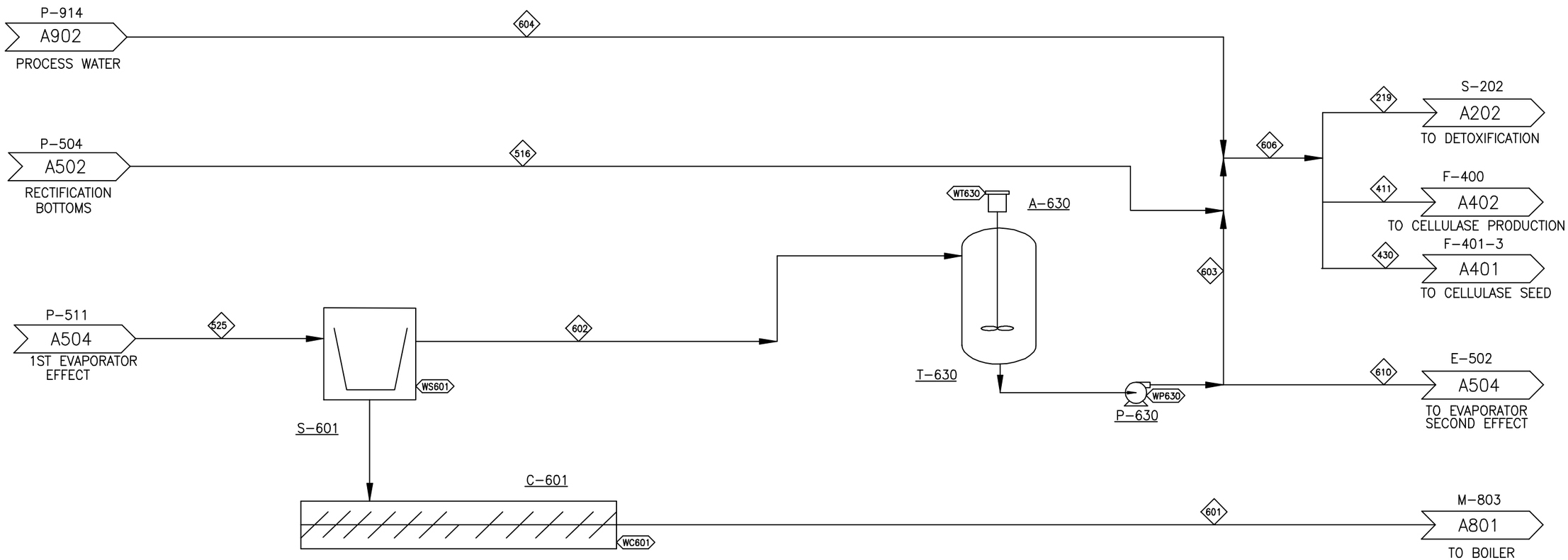

COMPONENT	UNITS	219	411	430	516	525	601	602	603	604	606	610
Total Flow	kg/hr	132,211	22,766	2,146	30,943	278,666	98,808	179,858	44,965	81,215	157,123	134,894
Insoluble Solids	%	0.2%	0.2%	0.2%	0.0%	11.4%	30.5%	0.9%	0.9%	0.0%	0.2%	0.9%
Soluble Solids	%	1.1%	1.1%	1.1%	0.7%	3.8%	4.4%	3.5%	3.5%	0.0%	1.1%	3.5%
Temperature	C	47	47	47	121	86	40	40	40	20	47	40
Pressure	atm	1.00	1.00	1.00	2.06	0.59	3.20	3.20	3.20	1.00	1.00	3.20
Vapor Fraction		0.00	0.00	0.00	0.00	0.00	0.00	0.00	0.00	0.00	0.00	0.00
Ethanol	kg/hr	19	3	0	16	42	11	30	8		23	23
Water	kg/hr	128,285	22,090	2,082	29,822	227,738	62,056	165,682	41,420	81,215	152,457	124,261
Glucose (SS)	kg/hr	0	0	0	0	219	219				0	
Xylose (SS)	kg/hr	110	19	2	0	721	196	524	131		131	393
Arabinose (SS)	kg/hr	87	15	1	0	570	155	415	104		104	311
Other Sugars (SS)	kg/hr	450	78	7	0	2,942	802	2,141	535		535	1,605
Cellobiose (SS)	kg/hr	59	10	1	0	383	104	279	70		70	209
Glucose Oligomers (SS)	kg/hr	464	80	8	0	3,030	826	2,204	551		551	1,653
Xylose Oligomers (SS)	kg/hr	154	27	3	0	1,009	275	734	183		183	550
Other Oligomers (SS)	kg/hr											
Corn Steep Liquor (SS)	kg/hr	191	33	3	227	1,720	1,720				227	
(NH4)2SO4 (SS)	kg/hr											
NH4Acetate (SS)	kg/hr											
Others (Soluble Solids)	kg/hr	3	1	0	0	29	14	14	4		4	11
Acetic Acid	kg/hr	453	78	7	122	2,293	625	1,668	417		539	1,251
Sulfuric Acid	kg/hr	45	8	1	0	295	80	214	54		54	161
Furfural	kg/hr	487	84	8	542	203	55	148	37		579	111
HMF	kg/hr	164	28	3	183	68	19	50	12		195	37
Carbon Dioxide	kg/hr	0	0	0	0						0	
Methane	kg/hr											
Oxygen	kg/hr											
Nitrogen	kg/hr											
Ammonia	kg/hr	10	2	0	11	0	0	0	0		11	0
NH4OH	kg/hr											
Others	kg/hr	900	155	15	21	5,743	1,547	4,196	1,049		1,070	3,147
Cellulose (IS)	kg/hr	15	3	0		3,631	3,559	73	18		18	54
Xylan (IS)	kg/hr	3	1	0		794	778	16	4		4	12
Arabinan (IS)	kg/hr	0	0	0		33	32	1	0		0	0
Other Sugar Polymers (IS)	kg/hr	1	0	0		164	161	3	1		1	2
Cellulase (IS)	kg/hr	66	11	1		625	312	312	78		78	234
Biomass (IS)	kg/hr	26	4	0		245	123	123	31		31	92
Zymo (IS)	kg/hr	112	19	2		1,062	531	531	133		133	398
Lignin (IS)	kg/hr	97	17	2		23,068	22,607	461	115		115	346
Gypsum (IS)	kg/hr	0	0	0		8	8	0	0		0	0
Ca(OH)2 (IS)	kg/hr											
Others (Insoluble Solids)	kg/hr	9	1	0		2,033	1,992	41	10		10	30
Enthalpy Flow (millions)	Kcal/hr	-489.6	-84.3	-7.9	-111.5	-969.8	-330.6	-649.5	-162.4	-308.0	-581.9	-487.1
Average Density	g/ml	0.979	0.979	0.979	0.900	1.013	1.157	0.999	0.999	0.998	0.979	0.999

Heat Stream No.	M M kcal/hr

Work Stream No.	kW
WC601	63.13
WP630	41.21
WS601	992.08
WT630	4.74

Eq. No.	Equipment Name	Req.	Spare	Equipment Type	M at Const.
A-630	Recycled Water Tank Agitator	1	0	Fixed-Prop	CS
C-601	Lignin Wet Cake Screw	1	0	Screw	CS
P-630	Recycled Water Pump	1	1	Centrifugal	CS
S-601	Beer Column Bottoms Centrifuge	3	0	Centrifugal	316SS
T-630	Recycled Water Tank	1	0	Flat-BTM-Storage	CS

VER	DESCRIPTION	DATE
A	SUBCONTRACTOR UPDATE	4/98
B	BASECASE UPDATE	9/98
C	WWT UPDATE	11/98
D	DESIGN REPORT	2/99
		LL 2/24/99

NREL NATIONAL RENEWABLE ENERGY LABORATORY
Biotechnology Center For Fuels And Chemicals

SECTION A600
LIGNIN SEPARATION & RECYCLE

r9901f.xls | PFD-P100-A601 | D

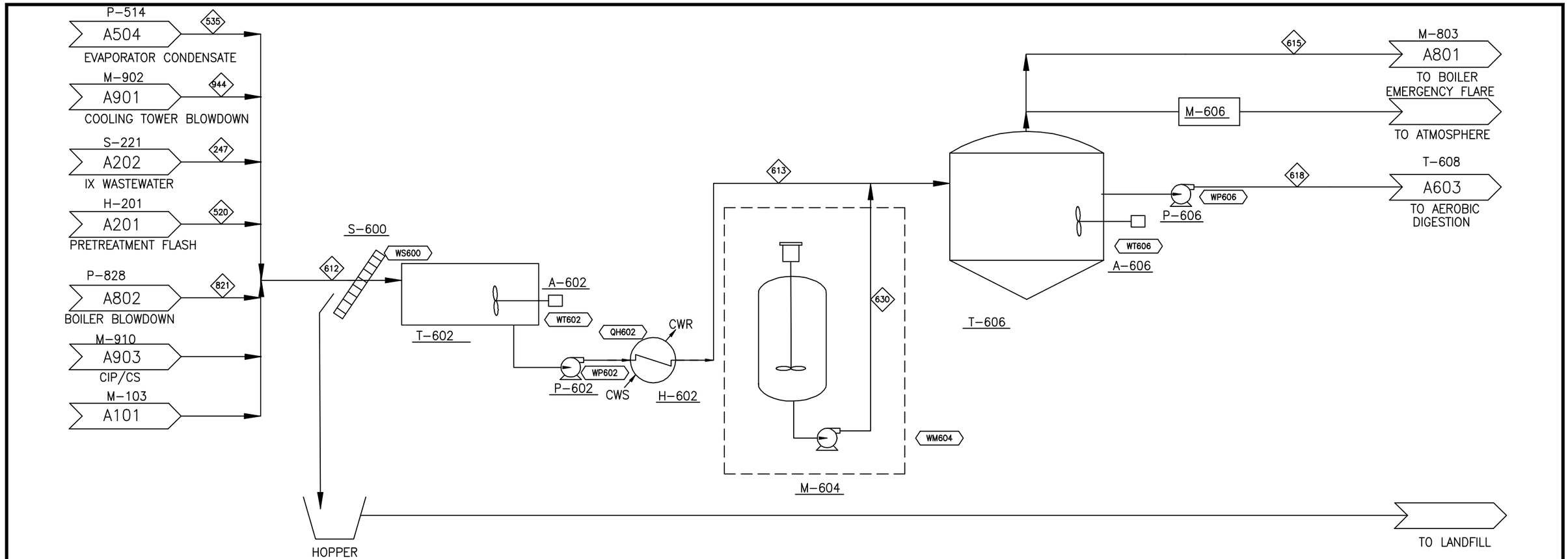

COMPONENT	UNITS	247	520	535	612	613	615	618	630	821	944
Total Flow	kg/hr	91,967	45,124	13,834	174,143	174,143	0	171,786	225	6,613	16,605
Insoluble Solids	%	0.0%	0.0%	0.0%	0.0%	0.0%	0.0%	0.1%	0.0%	0.0%	0.0%
Soluble Solids	%	4.8%	0.1%	0.3%	2.6%	2.6%	0.0%	0.2%	0.0%	0.0%	0.0%
Temperature	C	40	100	73	79	35		35	20	321	28
Pressure	atm	3.00	1.00	2.00	2.00	2.00		1.00	1.00	112.62	1.00
Vapor Fraction		0.00	0.07	0.00	0.00	0.00	0.00	0.00	0.00	0.00	0.00
Ethanol	kg/hr		34	13	47	47		3			
Water	kg/hr	87,291	43,810	13,684	168,003	168,003		170,526		6,613	16,605
Glucose (SS)	kg/hr										
Xylose (SS)	kg/hr		0	0	0	0		0			
Arabinose (SS)	kg/hr		0	0	0	0					
Other Sugars (SS)	kg/hr										
Cellobiose (SS)	kg/hr										
Glucose Oligomers (SS)	kg/hr										
Xylose Oligomers (SS)	kg/hr		0	0	0	0					
Other Oligomers (SS)	kg/hr										
Corn Steep Liquor (SS)	kg/hr		31	38	70	70		70			
(NH4)2SO4 (SS)	kg/hr	917			917	917					
NH4Acetate (SS)	kg/hr	3,515			3,515	3,515		246			
Others (Soluble Solids)	kg/hr										
Acetic Acid	kg/hr		261	41	302	302		21			
Sulfuric Acid	kg/hr		0	0	0	0					
Furfural	kg/hr		737	41	777	777		54			
HMF	kg/hr		248	14	262	262		18			
Carbon Dioxide	kg/hr							45			
Methane	kg/hr							2			
Oxygen	kg/hr										
Nitrogen	kg/hr										
Ammonia	kg/hr	7	0	0	7	7		7			
NH4OH	kg/hr	237			237	237		204			
Others	kg/hr		3	4	6	6		424	225		
Cellulose (IS)	kg/hr										
Xylan (IS)	kg/hr										
Arabinan (IS)	kg/hr										
Other Sugar Polymers (IS)	kg/hr										
Cellulase (IS)	kg/hr										
Biomass (IS)	kg/hr							166			
Zymo (IS)	kg/hr										
Lignin (IS)	kg/hr										
Gypsum (IS)	kg/hr										
Ca(OH)2 (IS)	kg/hr										
Others (Insoluble Solids)	kg/hr										
Enthalpy Flow (millions)	Kcal/hr	-344.7	-162.1	-51.5	-644.0	-651.4		-646.8	-0.9	-22.9	-62.8
Average Density	g/ml	0.915	0.009	0.946	0.910	0.949		0.982	0.998	0.665	0.991

Heat Stream No.	M M kcal/hr
QH602	7.37

Work Stream No.	kW
WM604	7.42
WP602	41.91
WP606	39.97
WS600	0.74
WT602	24.81
WT606	120.86

Eq. No.	Equipment Name	Req.	Spare	Equipment Type	Mat Const.
A-602	Equalization Basin Agitator	1	0	Fixed-Prop	SS
A-606	Anaerobic Agitator	4	0	Fixed-Prop	SS
H-602	Anaerobic Digestor Feed Cooler	1	0	Shell-Tube	SS316;CS
M-604	Nutrient Feed System	1	0	Package	CS
M-606	Biogas Emergency Flare	1	0	Miscellaneous	SS
P-602	Anaerobic Reactor Feed Pump	1	1	Centrifugal	CS
P-606	Aerobic Digestor Feed Pump	1	1	Centrifugal	CS
S-600	Bar Screen	1	0	Screen	CS
T-602	Equalization Basin	1	0	Flat-BTM-Storage	CONCRETE
T-606	Anaerobic Digestor	4	0	Flat-BTM-Storage	EPOXY-LINED

VER	DESCRIPTION	DATE
A	SUBCONTRACTOR UPDATE	4/98
B	BASECASE UPDATE	9/98
C	WWT UPDATE	11/98
D	DESIGN REPORT	2/99
		LL 2/24/99

NATIONAL RENEWABLE ENERGY LABORATORY
Biotechnology Center For Fuels And Chemicals

SECTION A600
ANAEROBIC DIGESTION

r9901f.xls | PFD-P100-A602 | D

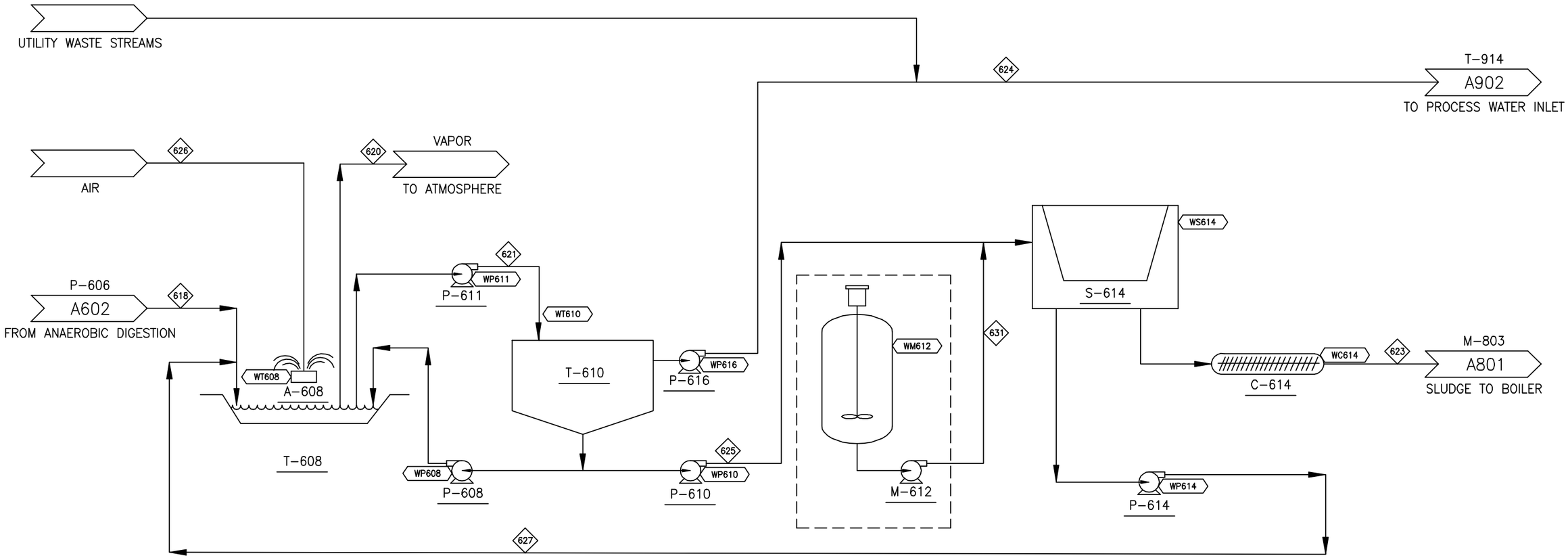

COMPONENT	UNITS	618	620	621	623	624	625	626	627	631
Total Flow	kg/hr	171,786	152,740	173,428	897	168,058	5,371	149,908	4,475	1
Insoluble Solids	%	0.1%	0.0%	0.2%	30.0%	0.0%	5.0%	0.0%	0.0%	0.0%
Soluble Solids	%	0.2%	0.0%	0.1%	0.0%	0.1%	0.1%	0.0%	0.1%	0.0%
Temperature	C	35	21	21	21	21	21	20	21	20
Pressure	atm	1.00	1.00	1.00	1.00	1.00	1.00	1.00	1.00	1.00
Vapor Fraction		0.00	1.00	0.00	0.00	0.00	0.00	1.00	0.00	0.00
Ethanol	kg/hr	3	0	0	0	0	0		0	
Water	kg/hr	170,526	2,379	172,759	626	167,669	5,090		4,464	
Glucose (SS)	kg/hr									
Xylose (SS)	kg/hr	0								
Arabinose (SS)	kg/hr									
Other Sugars (SS)	kg/hr									
Cellobiose (SS)	kg/hr									
Glucose Oligomers (SS)	kg/hr									
Xylose Oligomers (SS)	kg/hr									
Other Oligomers (SS)	kg/hr									
Corn Steep Liquor (SS)	kg/hr	70	1	71	0	69	2		2	
(NH4)2SO4 (SS)	kg/hr									
NH4Acetate (SS)	kg/hr	246		25	0	24	1		1	
Others (Soluble Solids)	kg/hr									
Acetic Acid	kg/hr	21	0	2	0	2	0		0	
Sulfuric Acid	kg/hr									
Furfural	kg/hr	54	1	5	0	4	0		0	
HMF	kg/hr	18	0	2	0	1	0		0	
Carbon Dioxide	kg/hr	45	333	0	0	0	0		0	
Methane	kg/hr	2	2	0	0	0	0		0	
Oxygen	kg/hr		31,222	1	0	1	0	31,481	0	
Nitrogen	kg/hr		118,452	3	0	3	0	118,427	0	
Ammonia	kg/hr	7	1	6	0	5	0		0	
NH4OH	kg/hr	204	170	35	0	34	1		1	
Others	kg/hr	424	179	252	1	244	7		7	1
Cellulose (IS)	kg/hr									
Xylan (IS)	kg/hr									
Arabinan (IS)	kg/hr									
Other Sugar Polymers (IS)	kg/hr									
Cellulase (IS)	kg/hr									
Biomass (IS)	kg/hr	166		269	269		269			
Zymo (IS)	kg/hr									
Lignin (IS)	kg/hr									
Gypsum (IS)	kg/hr									
Ca(OH)2 (IS)	kg/hr									
Others (Insoluble Solids)	kg/hr									
Enthalpy Flow (millions)	Kcal/hr	-646.8	-8.6	-656.5	-2.6	-636.9	-19.6	-0.2	-17.0	0.0
Average Density	g/ml	0.982	0.001	0.998	1.148	0.997	1.022	0.001	0.997	0.998

Heat Stream No.	MM kcal/hr

Work Stream No.	kW
WC614	5.13
WM612	3.73
WP608	1.21
WP610	0.71
WP611	39.72
WP614	1.03
WP616	38.51
WS614	20.69
WT608	605.87
WT610	3.71

Eq. No.	Equipment Name	Req.	Spare	Equipment Type	Mat Const.
A-608	Aerobic Lagoon Agitators	16	0	SURFACE-AERATOR	CS
C-614	Aerobic Sludge Screw	1	0	SCREW	CS
M-612	Filter Precoat System	1	0	MISCELLANEOUS	CS
P-608	Aerobic Sludge Recycle Pump	1	0	SLURRY	SS316
P-610	Aerobic Sludge Pump	1	0	SLURRY	SS316
P-611	Aerobic Digestion Outlet Pump	1	1	CENTRIFUGAL	CS
P-614	Sludge Filtrate Recycle Pump	1	1	CENTRIFUGAL	CS
P-616	Treated Water Pump	1	1	CENTRIFUGAL	CS
S-614	Belt Filter Press	1	0	FILTER-PRESS	0
T-608	Aerobic Digestor	1	0	LINED-PIT	POLYMER LINED
T-610	Clarifier	1	0	CLARIFIER	CONCRETE

VER	DESCRIPTION	DATE
A	SUBCONTRACTOR UPDATE	4/98
B	BASECASE UPDATE	9/98
C	WWT UPDATE	11/98
D	DESIGN REPORT	2/99
		LL 2/24/99

NREL NATIONAL RENEWABLE ENERGY LABORATORY
Biotechnology Center For Fuels And Chemicals

SECTION A600
AEROBIC DIGESTION

PFD-P100-A603 D

Appendix J

Waste Water Analysis Results

EVERGREEN ANALYTICAL, Inc.
4036 Youngfield St. Wheat Ridge, CO 80033
(303) 425-6021

Analysis Report

Co-current
Enzyme

Client Sample I.D.	: BF772014-P04	Client Project I.D.	: Waste Water Verification
Lab Sample Number	: 98-1609-01	Lab Project Number	: 98-1609
Date Sampled	: 04/23/98	Matrix	: Liquid Waste
Date Received	: 04/23/98		

Analysis	Method	Date Prepared	Date Analyzed	Result	Units
Total Suspended Solids	Standard Method 2540 D	04/27/98	04/27/98	11.0	mg/L
Biochemical Oxygen Demand	EPA 405.1	04/24/98	04/29/98	13,400 per N. Nigel ~~63400~~ *	mgO_2/L
Chemical Oxygen Demand	Hach Method 8000	04/24/98	04/24/98	27000 (2.7%)	mgO_2/L
Settleable Solids	Standard Method 2540 F	04/24/98	04/24/98	<0.1	ml/L

* Estimated Value due to underdilution

$\% \frac{BOD}{COD} = 0.4963$

Vicki - get your message. Evergreen did re-run that sample. The BOD was 13400 mg O_2/L
Call if you have questions /
Nick

R.P. Music II
Analyst

Approved

EVERGREEN ANALYTICAL, Inc.
4036 Youngfield St. Wheat Ridge, CO 80033
(303) 425-6021

Analysis Report

Counter - current
MR 2000

Client Sample I.D.	: TiO2 Treatment	Client Project I.D.	: Waste Water Verification
Lab Sample Number	: 98-1593-02	Lab Project Number	: 98-1593
Date Sampled	: 04/22/98	Matrix	: Liquid Waste
Date Received	: 04/22/98		

Analysis	Method	Date Prepared	Date Analyzed	Result	Units
Total Suspended Solids	Standard Method 2540 D	04/27/98	04/27/98	470	mg/L
Biochemical Oxygen Demand	EPA 405.1	04/23/98	04/28/98	29400	mgO_2/L
Chemical Oxygen Demand	Hach Method 8000	04/24/98	04/24/98	54000 (5.4%)	mgO_2/L
Settleable Solids	Standard Method 2540 F	04/24/98	04/24/98	<0.1	ml/L

$\frac{\%\ BOD}{COD} = 0.544$

R.P. MUSILEK
Analyst

Approved

EVERGREEN ANALYTICAL, Inc.
4036 Youngfield St. Wheat Ridge, CO 80033
(303) 425-6021

Softwood

Analysis Report

Client Sample I.D.	: Spent Broth MTX 7F	Client Project ID	: Waste Water Verification
Lab Sample Number	: 98-1697-01	Lab Project Number	: 98-1697
Date Sampled	: 4/30/98	Matrix	: Liquid Waste
Date Received	: 4/30/98		

Analysis	Method	Date Prepared	Date Analyzed	Result	Units
Total Suspended Solids	Standard Method 2540 D	5/4/98	5/4/98	953	mg/L
Biochemical Oxygen Demand	EPA 405.1	5/1/98	5/6/98	18300 (1.8%)	mgO_2/L
Chemical Oxygen Demand	Hach Method 8000	5/6/98	5/6/98	37000 (3.7%)	mgO_2/L
Settleable Solids	Standard Method 2540 F	5/7/98	5/7/98	0.47	ml/L

$\% \frac{BOD}{COD} = 0.4946$

Post-it® Fax Note 7671	Date 5/8 # of pages ▶ 1
To Nick Nagel	From Mark Mensik
Co./Dept. NREL	Co.
Phone #	Phone #
Fax #	Fax #

Analyst

Approved

EVERGREEN ANALYTICAL, Inc.
4036 Youngfield St. Wheat Ridge, CO 80033
(303) 425-6021

Counter-current

Analysis Report

Control

Client Sample I.D.	: Control	Client Project I.D.	: Waste Water Verification
Lab Sample Number	: 98-1593-01	Lab Project Number	: 98-1593
Date Sampled	: 04/22/98	Matrix	: Liquid Waste
Date Received	: 04/22/98		

Analysis	Method	Date Prepared	Date Analyzed	Result	Units
Total Suspended Solids	Standard Method 2540 D	04/27/98	04/27/98	630	mg/L
Biochemical Oxygen Demand	EPA 405.1	04/23/98	04/28/98	28800	mgO_2/L
Chemical Oxygen Demand	Hach Method 8000	04/24/98	04/24/98	52000 (5.2%)	mgO_2/L
Settleable Solids	Standard Method 2540 F	04/24/98	04/24/98	<0.1	ml/L

$\% \frac{BOD}{COD} = 0.5538$

Post-it® Fax Note 7671	Date 4/29 # of pages ▶ 2
To Nick Nagle	From Mark Mensik
Co./Dept. NREL	Co.
Phone #	Phone #
Fax #	Fax #

R.P. MOSILL III
Analyst

Approved

PINNACLE
Biotechnologies International, Inc.

July 1, 1998

Nick Nagle
National Renewable Energy Laboratory
1617 Cole Blvd.
Golden, CO 80401

Dear Nick,

This letter report and the accompanying invoice serves as the conclusion of activities under NREL procurement P.O. #160809. Sample characterization data were summarized in a previous letter report. Presently, the anaerobic fermentation data and conclusions are described.

The Anaerobic Fermentation Bioassay
It is important to note at the outset that the BMP assay may be useful in determining the potential level of bioconversion which may be possible for a test substrate. This assay may also give indications of a potential for a test substrate to cause inhibition of the anaerobic consortium which would limit or preclude conversion of the test substrate at least under anaerobic conditions. However, the BMP assay is always viewed as a rough cut analysis, with evaluation of continuous anaerobic digestion systems as a natural next step to provide better process data on rates and yields prior to engineering and costing commercial systems. The BMP assay may also be used to determine the effectiveness of treatments aimed at reducing sample toxicity or to improve the potential conversion rates and yields. Several important issues regarding the anaerobic fermentation studies (biochemical methane potential [BMP] assay) must be discussed prior to the interpretation of the data.

The Anaerobic Culture. A robust, diverse, anaerobic culture from a reliable, defined source is important to establishing the best fermentation analysis data. PINNACLE uses anaerobic cultures from anaerobic digesters at local municipal sewage treatment plants as assay and starter cultures as these cultures; 1) see a diverse mixture of organic wastes and therefore the microbial populations are diverse in biodegradative capabilities, 2) receive substantial macro and micro-nutrients and therefore are not operating under limiting or inhibitory conditions, and 3) are readily available and may be further obtained in large quantities for starting large scale applied systems once sufficient testing data is obtained.
The quantity of test culture used in the anaerobic fermentation assays is maximized to ensure rapid biodegradative results and to reduce the potential negative effects of dilution on the activity

of the culture.

Negative Control. A set of three negative controls were used during anaerobic fermentation studies to account for biogas production due to intrinsic organic matter contained in the anaerobic culture. It should be noted that any active culture used in fermentation tests will produce biogas from intrinsic organic matter unless the culture is first "washed" to remove this material first. For anaerobic fermentation studies, culture washing is detrimental to culture viability due to the potential to introduce oxygen or removal of complex macro and micro-nutrients. Without removing the intrinsic organics contained in the anaerobic culture, it is possible that an added test sample will negatively or positively affect the conversion of the intrinsic culture organics and therefore the background biogas production.

Positive Control. Generally, a positive control is selected which is similar to the composition of the test samples and which can serve as a check on the biodegradative capacity of the anaerobic culture used. The positive control is prepared at similar pH and organic loading to the test samples.

Anaerobic Fermentation Studies

Test Samples. Test sample characterizations were described in a previous letter report and indicated that samples MTX 7F, TiO2, and the Control Hydrolyzate were comparable in mass percent volatile solids (organic content) while sample BF 772014 was nearly 50% more dilute. The pH of all test samples were considerably below pH 7.0 and required adjustment with potassium hydroxide prior to fermentation studies. The analysis of chemical oxygen demand (COD), a measure of oxidizable carbon in the sample, indicated samples TiO2 and the Control Hydrolyzate were similar and the highest of the samples while BF 772014 was the lowest.

Positive Control. For the positive control, a solution of protein hydrolyzate (BactoPeptone, Difco) was used. The use of a protein hydrolyzate sample was envisioned to be relatively close to the composition of the ethanol hydrolyzate samples. The mass percent volatile solids and COD values for the positive control sample were only slightly greater than samples TiO2 and the Control Hydrolyzate.

Pre-Incubation and Startup. Anaerobic fermentation assays were initiated following incubation of the assay bottles for almost four days in order to reduce the background biogas production derived from the intrinsic organics in the anaerobic culture. A single volumetric loading was used (5%) which resulted in varying organic loadings for the different test samples from 1.41 to 2.87 grams of COD per liter of culture due to their individual concentrations.

Results. Immediate and strong biogas production was determined for all test samples as detailed in Figure 1. All samples also demonstrated the majority of the biogas production, hence the sample organic conversion, was complete within 5 to 10 days. The overall level of anaerobic bioconversion for each test sample is shown in Figure 2 based on the individual sample COD loading. A theoretical yield of 350 mL of methane per gram of COD added represents 100% conversion (Owen and McCarty, 1964). Anaerobic conversion data is shown in Table 1, below for the test samples after 26 days of incubation.

Table 1. Anaerobic Fermentation Data and Final Analyses (26 d)

Assay	BF 772014	MTX 7F	TiO2	Control Hyd.	Bacto Peptone
COD Loading (gCOD/bottle)	0.141	0.174	0.279	0.272	0.287
Theoretical CH4 Yield (mL)	49.35	60.90	97.65	95.20	100.45
Actual CH4 Yield (mL)	36.07	75.16	35.39	76.93	83.01
% Anaerobic Conversion	73.09	123.42	36.24	80.81	82.64
Final Biogas Methane (%)	61.40	61.86	64.56	61.43	64.98
Final pH	7.23	7.22	7.24	7.24	7.36

In general, the data indicates that the positive control (BactoPeptone), the Control Hydrolyzate, and BF 772014 resulted in similar levels of bioconversion (70% to 80%). If these samples were to be further incubated to 90 days, the final level of anaerobic conversion based on COD loading would most likely range from 90% to 100% of the theoretical. This slow approach to near complete digestion during the extended incubation period (final 60 days of a 90 day test) represents the adaptation of the anaerobic culture to minor, less common organics in the test samples.

The results found for the positive control, the Control Hydrolyzate and BF 772014 are characteristic of organic wastes which are eminently biodegradable. Test sample TiO2 demonstrated limited biogas production indicating that organics in the sample were only partly biodegradable.

BMP data for NREL sample MTX 7F indicated greater than 100% conversion to the methane endproduct. This may be explained as either inaccurate COD analysis or active enzymes

contained in the sample which are effective in converting recalcitrant intrinsic organics (i.e., polymers) of the seed culture. Table 2. compares initial and final COD analysis for all four NREL test samples and validates the relative accuracy of the assay.

Table 2. Re-Evaluation of NREL Test Sample COD Values

Assay	BF 772014	MTX 7F	TiO2	Control Hyd.
Primary COD Assay (mg/L)	28,267	34,800	55,800	54,400
Secondary COD Assay (mg/L)	26,330	32,330	53,330	55,660
Difference (%)	-6.85	-7.10	-4.43	+2.32

As the accuracy of the test sample COD values are assured, the only plausibly explanation is sample MTX 7F contained active hydrolytic enzymes which served to hydrolyze recalcitrant organics contained in the starter culture. Methods to test this theory and determine the true nature of the anaerobic biodegradation potential for this sample may include a thermal treatment of the sample to inactivate enzymes followed by conducting another BMP assay. In addition, the test sample could be analyzed by standard method for hydrolyzing enzyme activity.

Conclusion

All samples tested demonstrated immediate and strong biogas production. None of the samples tested demonstrated toxicity to the anaerobic culture. The positive control demonstrated predicted effectiveness of the anaerobic starter culture. NREL samples BF 772014 and the Control Hydrolyzate demonstrated conversions similar to that of the positive control and may therefore be considered amenable to anaerobic treatment. NREL sample TiO2 demonstrated reduced conversion effectiveness which is likely due to some level of non-biodegradable organics in the sample. The excessive biogas production resulting in assays performed using NREL sample MTX 7F indicates that additional testing as described above is required to accurately predict the level of conversion possible.

While this data may be used to predict approximate fuel gas production which may result from treating large volumes of the respective organic steams using anaerobic digestion systems, in order to accurately engineer commercial-scale anaerobic systems, additional data from applied, longer-term operation of continuous anaerobic digestion systems should be obtained.

PINNACLE
Biotechnologies International, Inc.

Nick Nagle
National Renewable Energy Laboratory
1617 Cole Blvd.
Golden, CO 80401

Dear Nick,

The four NREL samples received from you were stored under refrigeration until being transferred by cooler to PINNACLE's Research, Development and Testing Center in Stanton, California for analysis and fermentation studies.

Rather than using Avecel as the positive control for these studies, a soluble substrate was used which more closely matches the NREL samples. The positive control substrate used was a Bacto Peptone solution at 4.5% w/v in distilled water. The NREL samples were analyzed on delivery PINNACLE's Testing Center. Total solids (%TS), volatile solids (%VS), and ash analyses were performed in triplicate. Analysis of sample pH were performed after a 2-point standardization of the combination pH probe.

Table 1. Sample Analysis Upon Receipt

Assay	BF 772014	MTX 7F	TiO2	Control Hyd.	Bacto Peptone
% Total Solids	2.73	4.49	5.56	5.20	5.67
% Volatile Solids	87.44	89.86	74.04	82.33	95.67
Mass % Volatile Solids	2.39	4.03	4.12	4.28	5.42
pH	5.39	4.93	5.24	5.36	7.08

As the NREL samples were considerably lower than the pH 7.0 necessary to perform the anaerobic digestibility analysis, they were adjusted to neutrality using a 5% w/v solution of KOH. A 50 mL aliquot of each sample was transferred to a small beaker. The sample was mixed using a magnetic stirrer and the pH monitored during KOH addition. The samples were then analyzed for Chemical Oxygen Demand (COD) using the HACH High Range Plus COD tube assay. All COD assays were performed in triplicate as detailed in Table 2.

1667 Cole Blvd., Suite 400, Golden, CO 80401 Phone (303) 235-0613 Fax (303) 235-0603

Table 2. Sample pH Adjustment and COD Analysis

Assay	BF 772014	MTX 7F	TiO2	Control Hyd.
Initial pH	5.39	4.93	5.24	5.36
mL KOH Added	0.56	1.22	1.11	0.8
Dilution Factor	0.9889	0.9762	0.9783	0.9843
Final pH	7.12	7.08	7.13	7.14
COD (mg/L)	28,267	34,800	55,800	54,400

For comparison, the COD level of the Bacto Peptone positive control was 57,400 mg/L.

Anaerobic Digestibility Assays

The Biochemical Methane Potential (BMP) assay was used to address the biodegradability or toxicity of the NREL samples. The BMP assay employed a mesophilic anaerobic culture obtained from the Terminal Island Sewage Treatment Plant, Terminal Island, CA. This anaerobic culture was assayed prior to use as detailed in Table 3.

Table 3. Analysis of the Terminal Island Anaerobic Culture Used in BMP Assays

Assay	Value
Total Solids	3.11%
Volatile Solids	62.53%
Ash	37.47%
pH	7.43

The BMP assays were prepared in triplicate using serum bottles with a total volume of 162 mL. Using a 25 mL pipette, 100 mL (± 1.8 mL) of active anaerobic culture was transferred to each serum bottle. The headspace of each serum bottle was then flushed with UHP nitrogen for 1-min. prior to closing the bottles with a rubber stopper and an aluminum crimp cap. The serum bottles were incubated at 37°C with shaking (200 rpm) using a Lab-Line Orbit Environ-Shaker.

The serum bottles were incubated for a period of almost 4 days prior to commencing the BMP assay in order to reduce background biogas production from intrinsic organic matter contained in the anaerobic sludge culture. In order to reduce the negative effects of dilution on the BMP anaerobic culture, a standard 5 mL addition of each test substrate was used. This represented roughly a 5% dilution of the anaerobic culture. The actual organic loadings and theoretical methane potential for each substrate varied as per its relative composition as described below in Table 4.

Table 4. BMP Organic Loadings

Sample	Volume Added	Organic Loading		Theoretical Methane Yield (mL)**
		gVS/bottle*	gCOD/bottle	
Bacto Peptone	5 mL	0.271	0.287	100.45
BF 772014	5 mL	0.118	0.141	49.35
MTX 7F	5 mL	0.197	0.174	60.90
TiO2	5 mL	0.202	0.279	97.65
Control Hydrolyz.	5 mL	0.211	0.272	95.20

* Volatile solids loading corrected for sample dilution during pH adjustment.
** Theoretical methane yields based on COD loading using a yield of 350 mL CH_4 per gram COD added (Owen and McCarty, 1964).

Appendix K

Comparison of CH4 Generation

in WWT Models

National Renewable Energy Laboratory

Memo

To: R. Wooley

From: K. Kadam

Date: September 21, 1998

Subject: Comparison of CH_4 Generation in WWT Models

There is a discrepancy between methane yields from the old Aspen model and that from the new model incorporating the latest WWT as designed by Merrick & Co. Hence, the assumptions of various WWT models regarding biomethanation were compared.

The current biomethanation basis is from the Chem Systems report ("Biomass to Ethanol Process Evaluation," December 1994), page III-31. The original basis for COD-to-CH_4 conversion had come from the CH2MHill report ("Full Fuel Cycle Evaluation of Biomass to Ethanol: Wastewater Treatment System Performance," DEN/197/R/012.51/1, December 10, 1991) page 13, Table 4. These bases are summarized in Table 1. Merrick & Co.'s basis is 0.35 L/g COD, with a molar ratio of CH_4:CO_2::0.75:0.25; however, the numbers for Merrick in Table 1 are calculated from the Aspen output.

Table 1. Conversion of COD to CH_4, CO_2 and Cell Mass

	CH_4, g/g COD	CO_2, g/g COD	Cell Mass, g/g COD
Previous bases			
Chem Systems	0.5600	0.2400	0.2000
CH2MHill	0.2413	0.1607	0.0553
Current estimated bases			
		New model with syrup to WWT[1]	
Merrick	0.1970	0.1801	0.0306
		New model with syrup to burner/off the sheet[2]	
Merrick	0.2719	0.2486	0.0355

[1]Model no. R9808N
[2]Model no. R9808N1

Table 2. CH_4, CO_2 and Cell Mass Yields for Various Cases (2000 tpd Enzyme Process)

	CH_4, kg/h	CO_2, kg/h	Cell Mass, kg/h	Total, kg/h
		***Old model*[1]**		
Chem Systems	7237.1	3101.6	2584.7	12923.4
CH2MHill	3118.4	2076.8	714.7	5909.9
		***New model with syrup to WWT*[2]**		
Chem Systems	6566.9	2814.4	2345.3	11726.6
CH2MHill	2829.6	1884.5	648.5	5362.6
Merrick	2310.2	2112.5	359.0	4781.6
		***New model with syrup to burner/off the sheet*[3]**		
Chem Systems	2515.1	1077.9	898.3	4491.3
CH2MHill	1083.7	721.7	248.4	2053.9
Merrick	1221.2	1116.7	159.6	2497.4

[1]Model no. W9804H
[2]Model no. R9808N
[3]Model no. R9808N1

Table 2 shows that the methane yields based on the Chem Systems report are off by a factor of 2–3. This is because the Chem Systems methane yield does not seem to be based on any field experience but rather is calculated from erroneous assumptions. The CH2MHill and Merrick bases give similar results. Hence, the Merrick WWT model seems to be a reasonable approximation of a real-life WWT system for methane yields. However, the big difference in COD-to-CH_4 yields for the two Merrick cases should be explained.

cc: M. Ruth, K. Ibsen